Appendix 8-C

Utility Systems Plans (Water, Sewer, and Stormwater)

September 2024



Utility Systems Plan
Sanitary Sewer, Water, and Stormwater

MONROE
WASHINGTON

BHC CONSULTANTS

BHC Consultants, LLC
1601 Fifth Avenue, Suite 500
Seattle, Washington 98102
206.505.3400
www.bhcconsultants.com

THIS PAGE INTENTIONALLY BLANK.

City of Monroe

Utility Systems Plan

Sanitary Sewer, Water, and Stormwater

September 2024

City Council

Geoffrey Thomas, Mayor
Kevin Handford, Position 1
Tami Beaumont, Position 2
Kyle Fisher, Position 3
Heather Fulcher, Position 4
Jacob Walker, Position 5
Jason Gamble, Position 6
Kirk Scarboro, Position 7

City Administrator
Deborah Knight

Public Works Director
Jakeh Roberts

Operations & Maintenance Manager
Jakeh Roberts

Wastewater Superintendent
John Lande

THIS PAGE INTENTIONALLY BLANK.

PROJECT CERTIFICATION

City of Monroe

Utility Systems Plan
Sanitary Sewer, Water, and Stormwater

The technical material and data contained in this plan was prepared by BHC Consultants, LLC under the supervision of the below listed individuals. Those responsible staff members who are registered professional engineers are licensed in the State of Washington.

 9/12/2024	Common Elements: Chapters 1, 2, and 3 Water Plan Chapters: W 4, W 5, W 6, W 7, W 8, W 9, W 10, and W 11 Ryan Michael Jones, P.E. BHC Consultants, LLC
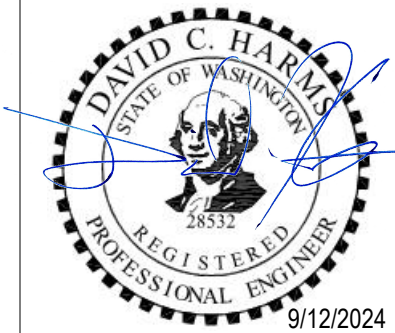 9/12/2024	Sanitary Sewer Plan Chapters: SS 4, SS 5, SS 6, SS 7, SS 8, SS 9, SS 10, and SS 11 David C. Harms, P.E. BHC Consultants, LLC
 9/12/2024	Stormwater Plan Chapters: SW 4, SW 5, SW 6, SW 7, SW 8, and SW 9 Carla G. Talich, P.E. BHC Consultants, LLC

THIS PAGE INTENTIONALLY BLANK.

TABLE OF CONTENTS

1 EXECUTIVE SUMMARY **Page**
1.1 Introduction 1-1
1.2 Projected Sanitary Sewer Flows, Loads and Analysis 1-3
1.3 Projected Water Demands and Analysis 1-4
1.4 Stormwater Improvements and Analysis 1-4
1.5 Capital Improvements Projects 1-5

2 INTRODUCTION
2.1 System Utility Plan Update Roadmap 2-1
2.2 Ownership and Management 2-4
2.3 System Histories and Background 2-4
2.3.1 Sanitary Sewer System 2-4
2.3.2 Water System 2-9
2.3.3 Stormwater System 2-12

3 LAND USE AND SERVICE AREA
3.1 Service Area Description 3-1
3.1.1 City of Monroe 3-1
3.1.2 Snohomish County 3-1
3.2 Surrounding Vicinity Characteristics 3-1
3.2.1 Topography 3-2
3.2.2 Water Resources 3-2
3.2.3 Soil and Geology 3-7
3.3 Land Use 3-11
3.3.1 Growth Management Act 3-11
3.3.2 City Extension Policies 3-15
3.4 Relationships With Adjacent Agencies 3-15
3.5 Service Areas 3-16
3.5.1 Sanitary Sewer 3-16
3.5.2 Water 3-16
3.5.3 Stormwater 3-16

SANITARY SEWER SYSTEM

SS 4 EXISTING WASTEWATER FACILITIES – SANITARY SEWER
4.1 Introduction SS 4-1
4.2 Existing and Planned Basins SS 4-1
4.3 Existing Sewer Piping SS 4-9
4.4 Existing Pump Stations SS 4-10
4.5 Wastewater Treatment Plant SS 4-12

SS 5 EXISTING AND FUTURE POPULATION AND FLOW PROJECTIONS – SANITARY SEWER
5.1 Population SS 5-1
5.1.1 General SS 5-1

5.1.2 Current Population SS 5-1
5.1.3 Future Population SS 5-1
5.2 Existing Wastewater Flows SS 5-4
5.2.1 Sewer Per Capita Flow Rates SS 5-5
5.2.2 Maximum Month, Maximum Day, and Peak Hour Flows SS 5-6
5.3 Existing Sewage Peaking Factors SS 5-6
5.3.1 Diurnal Curve SS 5-6
5.4 Infiltration and Inflow (I/I) Analysis SS 5-7
5.5 Projected Flows SS 5-8

SS 6 SANITARY SEWER SYSTEM ANALYSIS
6.1 Introduction SS 6-1
6.2 Existing Sanitary Sewer System Data Collection SS 6-1
6.3 Collection system Model Construction SS 6-1
6.3.1 Model Software SS 6-1
6.3.2 Data Sources SS 6-1
6.3.3 Model Coverage and Hydraulic Features SS 6-2
6.4 Hydraulic Modeling Analysis SS 6-2
6.4.1 Modeling Scenarios SS 6-2
6.4.2 Sewage Flows by Sewer Basins SS 6-2
6.4.3 Sanitary Sewer System Deficiency Criteria SS 6-3
6.4.4 Sanitary Sewer System Deficiency Analysis SS 6-4
6.5 Limitations and Uncertainty SS 6-4

SS 7 WASTEWATER TREATMENT PLANT – SANITARY SEWER
7.1 Introduction SS 7-1
7.2 Treatment Requirements SS 7-1
7.3 Treatment Performance SS 7-5
7.4 NPDES Permitted Capacity and Historical Loading SS 7-5
7.5 Violations and Bypasses SS 7-6
7.6 Future Capacity Evaluation SS 7-6
7.6.1 DOC Loading Criteria SS 7-7
7.6.2 Residential/Non-Residential Loading Criteria SS 7-8
7.6.3 Projected WWTP Loading SS 7-9
7.7 Unit Process Descriptions SS 7-10
7.7.1 Headworks SS 7-10
7.7.2 Primary Clarifiers SS 7-11
7.7.3 Aeration Basins SS 7-12
7.7.4 Secondary Clarifiers SS 7-13
7.7.5 UV Disinfection SS 7-14
7.7.6 Effluent Pump Station, Outfall, and Receiving Waters SS 7-15
7.7.7 Sludge Handling SS 7-16
7.7.8 Odor Control SS 7-17
7.8 WWTP Unit Process Capacity Evaluation SS 7-17
7.8.1 Unit Process Capacity SS 7-18
7.9 Future Regulatory Issues for WWTP SS 7-20

7.10 WWTP Improvements and Additional Needs SS 7-20
7.10.1 Structure Age/Condition SS 7-20
7.10.2 Equipment Age/Condition SS 7-20
7.10.3 Equipment Obsolescence SS 7-20
7.11 WWTP Conclusions and Recommendations SS 7-21
7.11.1 Update Since the 2022 Engineering Report SS 7-21
7.11.2 Proposed Improvements SS 7-22

SS 8 WASTEWATER RECLAMATION AND REUSE – SANITARY SEWER
8.1 Reclaimed Water Evaluation SS 8-1
8.1.1 Introduction SS 8-1
8.1.2 Water Reclamation and Reuse Standards SS 8-1
8.1.3 Treatment Standards SS 8-2
8.1.4 Allowable Uses of Reclaimed Water SS 8-2
8.1.5 Use Area Requirements SS 8-4
8.1.6 Operational and Reliability Requirements SS 8-4
8.2 Potential for Reuse in the City of Monroe SS 8-5
8.2.1 National Pollutant Discharge Elimination System (NPDES) Compliance SS 8-5
8.2.2 Offsets to Existing Water Rights SS 8-5
8.2.3 Substitution of Potable Water Uses SS 8-5
8.3 Conceptual Design SS 8-6
8.3.1 Production of Reclaimed Water SS 8-6
8.3.2 Water Reuse System SS 8-8
8.3.3 Operation and Maintenance Costs SS 8-8
8.4 Estimate of Probable Project Costs SS 8-9
8.5 Wastewater Reuse Potential SS 8-9

SS 9 OPERATIONS AND MAINTENANCE PROGRAM – SANITARY SEWER
9.1 Introduction SS 9-1
9.2 City Management and Personnel SS 9-1
9.3 Major System Components and Routine System Operation SS 9-2
9.4 Operations and Maintenance Activities SS 9-2
9.4.1 Pump Stations SS 9-3
9.4.2 Force Mains SS 9-3
9.4.3 Gravity Sewers and Manholes SS 9-3
9.4.4 Wastewater Treatment Plant SS 9-4
9.5 Sanitary Sewer Overflow Response Plan SS 9-4
9.6 Staffing Assessment SS 9-5
9.6.1 WWTP Staffing SS 9-5
9.7 Recommended O&M Improvements SS 9-6

SS 10 COLLECTION SYSTEM FACILITIES DESIGN AND CONSTRUCTION STANDARDS – SANITARY SEWER
10.1 Overview SS 10-1
10.2 Environmental Checklist and Permits SS 10-1

10.3 Pretreatment SS 10-1
10.4 Project Review Procedures SS 10-1
10.5 Policies and Requirements for Outside Parties SS 10-2
10.6 Design Standards SS 10-2
10.7 Construction Standards SS 10-2
10.8 Construction Certification and Follow-Up Procedures SS 10-3
10.9 Developer Sewer System Extensions and Upgrades SS 10-3
10.10 Review of Sewer Use Ordinance SS 10-3
10.10.1 Municipal Code 13.10.080 SS 10-3
10.11 Septic to Sewer Conversion SS 10-4

SS 11 CAPITAL IMPROVEMENTS PROGRAM – SANITARY SEWER
11.1 Introduction SS 11-1
11.2 Capital Improvement Plan SS 11-1

SS 12 SANITARY SEWER FINANCIAL – SANITARY SEWER
12.1 Introduction SW 12-1
12.2 Past Financial Performance SW 12-1
12.2.1 Comparative Financial Statements SW 12-1
12.3 Financial Plan SW 12-3
12.3.1 Capital Funding Plan SW 12-4
12.4 Available Funding Assistance and Financing Resources SW 12-6
12.4.1 City Resources SW 12-6
12.4.2 Outside Resources SW 12-7
12.4.3 Capital Funding Strategy SW 12-8
12.5 Financial Forecast SW 12-9
12.5.1 Current Financial Structure SW 12-10
12.6 Current and Projected Rates SW 12-14
12.6.1 Current Rates SW 12-14
10.6.2 Projected Rates SW 12-15
12.7 Affordability SW 12-15
12.8 Conclusion SW 12-16

WATER SYSTEM

W 4 DESCRIPTION OF THE WATER SYSTEM – WATER
4.1 Ownership and Management W 4-1
4.2 System History and Background W 4-1
4.3 Related Plans W 4-1
4.3.1 City of Everett Water Comprehensive Plan W 4-1
4.3.2 City of Monroe and Snohomish County Comprehensive Land Use Plans W 4-2
4.3.3 City of Monroe Environmental Impact Statement (EIS), Sanitary Sewer Plan, Stormwater Plan, and Traffic Plan W 4-2
4.3.4 North Snohomish County Coordinated Water System Plan W 4-2
4.3.5 Snohomish County 2020 Hazard Mitigation Plan W 4-2

4.3.6 Washington Restoration and Enhancement Plan WRIA 7 Snohomish Watershed W 4-3
4.3.7 Washington State Department of Corrections Capital Improvements Plan W 4-3
4.4 Service Area, Maps, and Land Uses W 4-3
4.4.1 Adjacent Water Purveyors W 4-3
4.4.2 Future Service Area W 4-8
4.5 System Policies W 4-8
4.5.1 Service Area Agreements W 4-8
4.5.2 Service Area Policies W 4-8
4.5.3 Annexation W 4-9
4.5.4 Consolidation W 4-9
4.5.5 Conditions of Service W 4-9
4.5.6 Satellite Management W 4-9
4.5.7 Surcharge for Customers Outside of the City Limits W 4-9
4.5.8 Formation of Local Improvement Districts W 4-9
4.5.9 Urban Growth Areas W 4-9
4.5.10 Utility Reimbursement Agreements W 4-10
4.5.11 Oversizing W 4-10
4.5.12 Cross-Connection Control Program W 4-10
4.5.13 Extension W 4-10
4.6 Duty to Serve W 4-10
4.6.1 Capacity W 4-10
4.6.2 Consistency W 4-10
4.6.3 Water Rights W 4-11
4.6.4 Timely and Reasonable Service W 4-11
4.7 Local Government Consistency W 4-11
4.8 Watershed Consistency W 4-11

W 5 BASIC PLANNING DATA
5.1 Current Population, Service Connections, and Equivalent Residential Units (ERU) W 5-1
5.1.1 Current Population W 5-1
5.1.2 Service Connections W 5-1
5.1.3 Equivalent Residential Units (ERUs) W 5-5
5.2 Water Production and Usage W 5-11
5.3 Distribution System Leakage W 5-15
5.4 Water Supply Characteristics W 5-15
5.5 Water Supply Reliability Evaluation W 5-15
5.6 Future Population Projections and Land Use W 5-18
5.6.1 Future Land Use W 5-18
5.6.2 Projected Population Projections W 5-18
5.7 Future Water Demand W 5-19
5.7.1 Projected Water Demand Without Water Use Efficiency W 5-19
5.7.2 Projected Water Demand With Water Use Efficiency W 5-20

W 6 SYSTEM ANALYSIS – WATER (SHELL)
6.1 Asset Management W 6-1
6.2 Water Quality Analysis W 6-12
6.3 System Design Standards W 6-12
6.4 Capacity Analysis W 6-19
6.4.1 Source of Supply Analysis W 6-19
6.4.2 Tank Storage and Pump Station Analysis W 6-19
6.4.3 Distribution System Hydraulic Analysis W 6-25
6.5 Summary of System Deficiencies W 6-26

W 7 WATER USE EFFICIENCY PROGRAM – WATER
7.1 Source and Service Metering W 7-1
7.2 Distribution System Leakage W 7-1
7.3 Water Use Efficiency Program W 7-2
7.4 Water Use Efficiency Savings W 7-3

W 8 SOURCE WATER PROTECTION – WATER

W 9 OPERATIONS AND MAINTENANCE PROGRAM – WATER
9.1 Water System Management and Personnel W 9-1
9.1.1 Operator Certification W 9-1
9.2 Operations and Preventative Maintenance W 9-2
9.2.1 Identification of Major System Components W 9-2
9.2.2 Routine System Operation W 9-2
9.2.3 Monitoring Frequency W 9-3
9.2.4. Preventative Maintenance Program W 9-4
9.2.5 Equipment, Supplies and Chemical Listing W 9-6
9.3 Comprehensive Water Quality Monitoring W 9-6
9.3.1 Bacteriological W 9-7
9.3.2 Disinfectant By-Product Monitoring W 9-7
9.3.3 Lead and Copper W 9-8
9.3.4 Per- and Poly- fluoroalkyl Substances (PFAS) W 9-9
9.4 System Operations Plans and Procedures W 9-13
9.4.1 Emergency Preparedness and Response W 9-13
9.4.2 Drought Response Plan W 9-13
9.4.3 Notification Procedures W 9-14
9.4.4 Safety Procedures W 9-16
9.4.5 Utility Shutoffs for Nonpayment W 9-16
9.5 Cross-Connection Control W 9-17
9.6 Sanitary Survey Findings W 9-17
9.7 Recordkeeping, Reporting, and Customer Complaint Program W 9-18
9.7.1 Recordkeeping W 9-19
9.7.2 Reporting W 9-21
9.8 Summary of O&M Deficiencies W 9-22
9.9 Staffing W 9-22

W 10 DISTRIBUTION FACILITIES DESIGN AND CONSTRUCTION STANDARDS – WATER

10.1 Project Review Procedures W 10-1
10.2 Policies and Requirements for Outside Parties W 10-1
10.3 Construction and Design Standards W 10-1
10.4 Construction Certification W 10-1

W 11 CAPITAL IMPROVEMENT PROGRAM – WATER

11.1 Capital Improvement Plan Project Prioritization W 11-1
11.2 Capital Improvement Program Summary and Schedule W 11-2

W 12 WATER SYSTEM FINANCIAL PLAN – WATER

12.1 Introduction W 12-1
12.2 Past Financial Performance W 12-1
12.2.1 Comparative Financial Statements W 12-1
12.3 Financial Plan W 12-3
12.3.1 Capital Funding Plan W 12-4
12.4 Available Funding Assistance and Financing Resources W 12-6
12.4.1 City Resources W 12-6
12.4.2 Outside Resources W 12-7
12.4.3 Capital Funding Strategy W 12-8
12.5 Financial Forecast W 12-9
12.5.1 Current Financial Structure W 12-9
12.6 Current and Projected Rates W 12-13
12.6.1 Current Rates W 12-13
12.6.2 Projected Rates W 12-14
12.6.3 Conservation Based Rates W 12-16
12.7 Affordability W 12-16
12.8 Conclusion W 12-17

STORMWATER SYSTEM

SW 4 EXISTING STORMWATER FACILITIES – STORMWATER

4.1 Introduction SW 4-1
4.2 Study Area General Description SW 4-1
4.3 Existing System Description SW 4-1
4.3.1 Stormwater Pipe SW 4-7
4.3.2 Culverts SW 4-7
4.3.3 Catch Basins SW 4-7
4.3.4 Ditches SW 4-7
4.3.5 Biofiltration Swales SW 4-7
4.3.6 Retention/Detention Ponds and Underground Storage Facilities SW 4-8
4.3.7 Infiltration Trenches SW 4-8
4.3.8 Oil-Water Separators SW 4-8
4.3.9 Outfalls SW 4-8
4.3.10 Water Quality Treatment Filtration Systems SW 4-9
4.3.11 Receiving Waters SW 4-9

4.4 Watersheds SW 4-10
4.4.1 Woods Creek Watershed SW 4-10
4.4.2 French Creek Watershed SW 4-13
4.4.3 Skykomish River Watershed SW 4-16

SW 5 CURRENT STORMWATER MANAGEMENT UTILITY PROGRAM – STORMWATER
5.1 General Description SW 5-1
5.2 Public Works – Design and Construction Division Services SW 5-2
5.2.1 Design and Construction Division Management and Administration SW 5-2
5.2.2 New Development and Plan Review (Including Inspections) SW 5-2
5.2.3 CIP Planning, Design, and Management SW 5-2
5.3 Public Works – Operation and Maintenance Division Services SW 5-2
5.3.1 Operation and Maintenance Division Management and Administration SW 5-7
5.3.2 Inspection and Cleaning SW 5-7
5.3.3 Repair and Replacement and CIP Construction SW 5-8
5.3.4 Equipment, Vehicle and Facility Repairs/Maintenance SW 5-8
5.3.5 Flood Hazard Planning, Monitoring, and Response SW 5-8
5.3.6 Public Education and Outreach SW 5-9
5.3.7 Storm System Inventory SW 5-10
5.3.8 NPDES Phase II Permit Compliance and Pollution Control SW 5-10
5.3.9 Coordination With Other Agencies SW 5-14
5.3.10 French Creek Assessment SW 5-14
5.4 Program Support and Financial Services SW 5-14
5.5 Capital Improvement Program SW 5-14

SW 6 REGULATORY REQUIREMENTS – STORMWATER
6.1 Introduction SW 6-1
6.2 City Ordinances and Regulations SW 6-1
6.2.1 Monroe Municipal Code 1.04 – Enforcement SW 6-2
6.2.2 Monroe Municipal Code 6.04 – Nuisances SW 6-2
6.2.3 Monroe Municipal Code 13.32 – Stormwater Management Utility SW 6-2
6.2.4 Monroe Municipal Code 13.34 – Illicit Discharge, Detection and Elimination SW 6-2
6.2.5 Monroe Municipal Code 14.01 – Flood Hazard Area Regulations SW 6-2
6.2.6 Monroe Municipal Code 15.02 – Stormwater Maintenance SW 6-3
6.2.7 Monroe Municipal Code 22.80 – Critical Areas SW 6-3
6.2.8 Monroe Municipal Code 22.82 – Shoreline Management SW 6-4
6.3 State Regulations SW 6-4
6.3.1 RCW 43.21C – State Environmental Policy Act SW 6-4
6.3.2 RCW 77.55 – Hydraulic Code SW 6-4
6.3.3 RCW 86.16 – Washington Floodplain Management SW 6-4
6.3.4 Growth Management Act SW 6-5
6.3.5 Shoreline Management Act SW 6-5
6.3.6 RCW 90.48 – State Implementation of the Clean Water Act SW 6-6

6.4 Federal Regulations SW 6-7
6.4.1 National Environmental Policy Act SW 6-7
6.4.2 Clean Water Act SW 6-7
6.4.3 Endangered Species Act SW 6-8
6.4.4 National Flood Insurance Program SW 6-8

SW 7 FUTURE PROGRAM NEEDS - STORMWATER
7.1 Introduction SW 7-1
7.2 Stormwater Planning and Policies SW 7-1
7.2.1 Stormwater Planning and Policies SW 7-2
7.2.2 Stormwater Management Action Planning (SMAP) SW 7-2
7.2.3 Stormwater Management for Existing Development (SMED) SW 7-3
7.3 Future Program Needs to Meet Regulatory Requirements SW 7-3
7.3.1 Operation and Maintenance Program Activities SW 7-3
7.3.2 Other Programmatic Activities SW 7-7
7.4 Future Program Needs Considering Annexations SW 7-8
7.5 Evolving Requirements SW 7-9
7.5.1 Climate Change SW 7-9
7.5.2 Additional Regulations SW 7-9
7.6 Future Program Recommendations SW 7-10
7.6.1 Staffing Recommendations SW 7-10
7.6.2 Recommended Actions SW 7-10

SW 8 PROBLEM IDENTIFICATION – STORMWATER
8.1 General Description and Information SW 8-1
8.2 Projects Identified for Modeling SW 8-7
8.3 Hydrology and Hydraulic Analysis SW 8-7
8.3.1 Basin Boundaries SW 8-7
8.3.2 Hydrologic Modeling Inputs SW 8-8
8.3.3 Hydraulic Modeling Inputs SW 8-8
8.4 Modeled Alternatives and Recommendations SW 8-10
8.4.1 Beaton Ditch (SW-2) SW 8-10
8.4.2 Beaton Road/Industrial Park (SW-9) SW 8-11
8.5 Capital Improvement Projects SW 8-12
8.5.1 Lake Tye South Inlet (SW-1) SW 8-14
8.5.2 Beaton Ditch (SW-2) SW 8-15
8.5.3 Arbor Heights Ditch and Tester Road (SW-3 and SW-4) SW 8-15
8.5.4 Downtown Porous Concrete (SW-5) SW 8-15
8.5.5 Tyler Lane Storm Basin (SW-6) SW 8-16
8.5.6 Magnuson Place Infiltration (SW-7) SW 8-16
8.5.7 154th and 170th Avenue Pond (SW-8) SW 8-16
8.5.8 Beaton Road/Industrial Park (SW-9) SW 8-16
8.5.9 Sams Street (SW-10) SW 8-16
8.5.10 Park and Powell (SW-11), Monroe Street and Park Street (SW-12), Monroe Street and Kelsey Street (SW-13), Park Street and Roberts Street (SW-14) SW 8-17

8.5.11 Concrete Pond at 149th Street and 173rd Avenue (SW-15) SW 8-17
8.5.12 Seventh-Day Adventist Oil Water Separator Vault (SW-16) SW 8-17
8.5.13 Projects Carried Forward From 2023 CIP (SW-17 Through SW-24)
8.6 Opinions of Probable Project Cost SW 8-17

SW 9 RECOMMENDATIONS – STORMWATER
9.1 Future Program Recommendations SW 9-1
9.1.1 Staffing Recommendations SW 9-1
9.1.2 Recommended Actions SW 9-1
9.2 Recommended Capital Improvements Program SW 9-2

SW 10 STORMWATER FINANCIAL PLAN – STORMWATER
10.1 Introduction SW 10-1
10.2 Past Financial Performance SW 10-1
10.2.1 Comparative Financial Statements SW 10-1
10.3 Financial Plan SW 10-3
10.3.1 Capital Funding Plan SW 10-4
10.4 Available Funding Assistance and Financing Resources SW 10-6
10.4.1 Capital Funding Plan SW 10-6
10.4.2 Outside Resources SW 10-6
10.4.3 Capital Funding Strategy SW 10-7
10.5 Financial Forecast SW 10-8
10.5.1 Current Financial Structure SW 10-9
10.6 Current and Projected Rates SW 10-13
10.6.1 Current Rates SW 10-13
10.6.2 Projected Rates SW 10-13
10.7 Affordability SW 10-14
10.8 Conclusion SW 10-14

List of Tables

GENERAL
2-1 Sanitary Sewer Utility Plan Requirements per WAC 173-240-050 2-1
2-2 Water System Utility Plan Requirements per WAC 246-290-100 2-2
2-3 Stormwater System Utility Plan Requirements 2-3
3-1 Utility Service Area 3-1
3-2 Land Uses and Zones in the Retail Service Area 3-12

SANITARY SEWER
SS 4-1 Existing Sewer Basins SS 4-2
SS 4-2 Existing Gravity Sewers SS 4-9
SS 4-3 Gravity Sewers Pipe Inventory by Material SS 4-9
SS 4-4 Existing Force Mains SS 4-10
SS 4-5 Force Main Pipe Inventory by Material SS 4-10
SS 4-6 Existing Pump Stations SS 4-11

SS 5-1	Total Population Forecasts for the City of Monroe and UGA	SS 5-2
SS 5-2	Sewered Population Forecasts for the City of Monroe and UGA	SS 5-3
SS 5-3	Historic Flows	SS 5-5
SS 5-4	Sewer Per Capita Flow Rates	SS 5-5
SS 5-5	Maximum Month and Maximum Day Flows	SS 5-6
SS 5-6	Peaking Factors	SS 5-6
SS 5-7	Projected Wastewater Flows	SS 5-9
SS 6-1	Dry Weather Flow by Sewer Basin	SS 6-3
SS 6-2	System Deficiency by Category	SS 6-4
SS 7-1	WWTP Historic Flows and Loads (with DOC Lagoons Online)	SS 7-5
SS 7-2	Projected Wastewater Flows	SS 7-7
SS 7-3	Washington State Department of Corrections (DOC) Per Capita Loading	SS 7-7
SS 7-4	Average Annual and Maximum Month Loads for BOD and TSS from DOC	SS 7-8
SS 7-5	Residential and Non-Residential Loading	SS 7-8
SS 7-6	Projected Loading	SS 7-9
SS 7-7	Summary of Proposed Studies and Improvements	SS 7-22
SS 8-1	Reclaimed Water Treatment Standards	SS 8-2
SS 8-2	Reclaimed Water Classification Requirements for Allowed Uses	SS 8-3
SS 8-3	Sky River Park Landscape Irrigation Demand	SS 8-6
SS 8-4	Reclamation Process Opinion of Probable Project Cost (OPPC)	SS 8-9
SS 9-1	City Operations Division Personnel Certifications	SS 9-2
SS 9-2	Recommended Collection System Maintenance Standards	SS 9-3
SS 10-1	Maximum Allowable Discharge Limits for Pollutants	SS 10-4
SS 10-2	Comparison of Selected Industrial Pretreatment Limits	SS 10-4
SS 11-1	CIP Opinion of Probable Project Costs: Years 1-6 (2025-2030)	SS 11-7
SS 11-2	CIP Opinion of Probable Project Costs: Years 7-20 (2031-2045)	SS 11-7
SS 11-3	CIP Project Descriptions : Years 1-6 (2025-2030)	SS 11-8
SS 12-1	Summary of Historical Fund Resources and Uses Arising from Cash Transactions	SS 12-2
SS 12-2	Budget, 6-Year and 20-Year CIPs	SS 12-4
SS 12-3	Budget and 6-Year CIP (Escalated $)	SS 12-5
SS 12-4	Budget, 6-Year and 20-Year Capital Financing Strategy	SS 12-9
SS 12-5	Budget and 6-Year Financial Forecast	SS 12-13
SS 12-6	Ending Cash Balance Summary	SS 12-14
SS 12-7	Existing Schedule of Rates	SS 12-15
SS 12-8	Projected Schedule of Rates	SS 12-15
SS 12-9	Community Affordability	SS 12-16

WATER

W 5-1	2023 PSRC Population and Employment	W 5-1
W 5-2	2023 WFI Service Connections	W 5-2
W 5-3	Utility Rates Summary by Meter Size and Designation	W 5-3
W 5-4	2023 Water Consumption and ERU_{ADD}	W 5-5
W 5-5	Derived ERUs From 2014 - 2023	W 5-6
W 5-6	Historical ADD and MDD Annual Summary	W 5-7
W 5-7	2023 Monthly Reads	W 5-11
W 5-8	Annual Production by Everett Tap and Total	W 5-11

W 5-9	Annual Usage Total by Customer Class	W 5-13
W 5-10	2023 Usage by Customer Category	W 5-14
W 5-11	Historical Annual Water Demand	W 5-16
W 5-12	Intertie Descriptions	W 5-17
W 5-13	Population and Employment by Year	W 5-19
W 5-14	Annual Water Demand Projections Without WUE	W 5-21
W 5-15	Annual Water Demand Projections With WUE	W 5-27
W 6-1	Source of Supply Inventory	W 6-1
W 6-2	Storage Facilities Inventory	W 6-7
W 6-3	Pump Station Inventory	W 6-8
W 6-4	Pressure Reducing Valve Station and Pressure Sustaining Valve Inventory	W 6-9
W 6-5	Pipe Length by Diameter and Material	W 6-11
W 6-6	Pipe Material by Diameter and Year of Installation	W 6-11
W 6-7	Length of Pipe by Material and Installation Year	W 6-12
W 6-8	General Facility Design Standards	W 6-15
W 6-9	Service Area Descriptions	W 6-20
W 6-10	Tank Storage Analysis	W 6-21
W 6-11	Pump Station Analysis	W 6-22
W 6-12	Priority Replacement Piping Summary	W 6-25
W 6-13	Demand Condition, Planning Horizons and Results Figures	W 6-25
W 6-14	Capacity Results Summary	W 6-26
W 6-15	Fire Flow Deficiency Summary By Service Area	W 6-27
W 7-1	System Distribution System Leakage	W 7-2
W 7-2	Projected Water Use With and Without WUE	W 7-4
W 9-1	Water System Personnel Registrations	W 9-2
W 9-2	Normal Operation – Reservoirs	W 9-3
W 9-3	Normal Operation – Pump Stations	W 9-3
W 9-4	System Monitoring Frequency	W 9-4
W 9-5	Water System Sampling and Testing Frequency Schedule	W 9-7
W 9-6	2023 Water Quality Analysis Results	W 9-8
W 9-7	Lead, Copper, and pH Results	W 9-8
W 9-8	Water System Personnel - Emergency Call-Up List	W 9-14
W 9-9	Media Outlets – Public Notification	W 9-16
W 9-10	Summary of Customer Complaints 2016-2023	W 9-18
W 9-11	Summary of Customer Complaints Under New System From May 2023-May 2024	W 9-18
W 11-1	CIP Opinion of Probable Costs: Years 1-6 (2025-2030)	W 11-3
W 11-2	CIP Opinion of Probable Costs: Years 7-15 (2031-2039)	W 11-5
W 11-3	CIP Opinion of Probable Costs: Years 16-20(2040-2044)	W 11-6
W 12-1	Summary of Historical Fund Resources and Uses Arising from Cash Transactions	W 12-2
W 12-2	Budget, 6-Year and 20-Year CIPs	W 12-4
W 12-3	Budget and 6-Year CIP (Escalated $)	W 12-5
W 12-4	Budget, 6-Year and 20-Year Capital Financing Strategy	W 12-9
W 12-5	Budget and 6-Year Financial Forecast	W 12-12
W 12-6	Ending Cash Balance Summary	W 12-13
W 12-7	Existing Schedule of Rates	W 12-14
W 12-8	Projected Schedule of Rates	W 12-15

STORMWATER

SW 4-1	City of Monroe Stormwater Facility Summary	SW 4-9
SW 4-2	Water Quality for Woods Creek Watershed	SW 4-12
SW 4-3	Endangered Species Listings	SW 4-13
SW 4-4	Water Quality for French Creek Watershed	SW 4-15
SW 4-5	Water Quality for Skykomish River Near Monroe	SW 4-16
SW 5-1	Staff Funded by the Stormwater Management Utility	SW 5-1
SW 5-2	Stormwater Maintenance Activities – Current Program	SW 5-3
SW 7-1	Future Stormwater Maintenance Activities	SW 7-5
SW 8-1	Stormwater Drainage and Water Quality Issues	SW 8-1
SW 8-2	Drainage Basin Areas	SW 8-8
SW 8-3	Hydrologic Model Results	SW 8-8
SW 8-4	Stormwater Drainage and Water Quality Recommendations	SW 8-12
SW 8-5	CIP Opinion of Probable Project Costs: Years 1-6 (2025-2030)	SW 8-19
SW 8-6	CIP Opinion of Probable Project Costs: Years 7-20 (2031-2045)	SW 8-20
SW 9-1	6-Year Stormwater Capital Improvement Program	SW 9-4
SW 9-2	20-Year Stormwater Capital Improvement Program	SW 9-5
SW 10-1	Summary of Historical Fund Resources and Uses Arising From Cash Transactions	SW 10-2
SW 10-2	Budget, 6-Year and 20-Year CIPs	SW 10-4
SW 10-3	Budget and 6-Year CIP (Escalated $)	SW 10-5
SW 10-4	Budget, 6-Year and 20-Year Capital Financing Strategy	SW 10-8
SW 10-5	Budget and 6-Year Financial Forecast	SW 10-12
SW 10-6	Ending Cash Balance Summary	SW 10-13
SW 10-7	Existing Schedule of Rates	SW 10-13
SW 10-8	Projected Schedule of Rates	SW 10-14
SW 10-9	Community Affordability Test	SW 10-14

List of Figures

GENERAL

1-1	Sanitary Sewer, Stormwater, and Water Utility CIPs	1-7
2-1	City of Monroe Public Works Organizational Chart	2-5
2-2	City of Monroe Vicinity Map	2-7
3-1	Service Area Topography	3-3
3-2	Water Features	3-5
3-3	Service Area Soils	3-9
3-4	Land Use and Zoning	3-13

SANITARY SEWER

SS 4-1	Sanitary Sewer Vicinity Map	SS 4-3
SS 4-2	Existing Sanitary Sewer System	SS 4-5
SS 4-3	Existing Sanitary Sewer Basins	SS 4-7
SS 4-4	WWTP Process Flow Diagram	SS 4-13
SS 5-1	Average Diurnal Curve	SS 5-7
SS 7-1	WWTP Site Layout	SS 7-3
SS 7-2	Average Monthly Flows and Loads	SS 7-6

SS 11-1 Priority Replacement of Obsolescent Piping SS 11-3
SS 11-2 Capital Improvement Program SS 11-5

WATER
W 4-1 Retail Service Area (RSA) & Adjacent Water Purveyors W 4-7
W 5-1 Historical ERUs (ADD) W 5-6
W 5-2 2024 ADD Demand W 5-9
W 5-3 Chain Lake Annual Summary W 5-12
W 5-4 Seasonal Variation by Customer Type W 5-15
W 5-5 2050 ADD Demand W 5-23
W 5-6 ADD Demand Increase From 2024 to 2050 W 5-25
W 6-1 Asset Inventory W 6-3
W 6-2 System Hydraulic Profile W 6-5
W 6-3 Fire Flow Requirements W 6-17
W 6-4 System Hydraulic Profile W 6-23
W 6-5 Priority Replacement of Obsolescent Pipe W 6-29
W 6-6 2024 ADD Scenario W 6-31
W 6-7 2034 ADD Scenario W 6-33
W 6-8 2044 ADD Scenario W 6-35
W 6-9 2024 PHD Scenario W 6-37
W 6-10 2034 PHD Scenario W 6-39
W 6-11 2044 PHD Scenario W 6-41
W 6-12 2024 MDD Scenario with Fire Flow W 6-43
W 6-13 2034 MDD Scenario with Fire Flow W 6-45
W 6 14 2044 MDD Scenario with Fire Flow W 6-47
W 9-1 Bacteriological & Disinfection By-Product Test Locations W 9-11
W 9-2 Water Main Break, Leak, and Customer Complaint W 9-19
W 11-1 Capital Improvement Program W 11-7

STORMWATER
SW 4-1 Stormwater Drainage Basins SW 4-3
SW 4-2 Stormwater System SW 4-5
SW 8-1 Capital Improvement Projects SW 8-5

Appendices

COMMON ELEMENTS
CE-A City of Monroe Public Works Design, Construction and Operation Standards
CE-B Plan Approval and Meeting Minutes
CE-C SEPA Checklist

SANITARY SEWER SYSTEM
SS-A NPDES Permit
SS-B Discharge Monitoring Reports
SS-C WWTP Process Capacity Evaluation
SS-D Wastewater Reclamation Process Opinion of Probable Project Costs

SS-E Not Used
SS-F Not Used
SS-G Not Used
SS-H Unauthorized Discharge SOP
SS-I SEPA Checklist
SS-J Capital Improvement Project Sheets

WATER SYSTEM

W-A Water Facilities Inventory (WFI)
W-B Service Area Description
W-C Local Government Consistency Forms
W-D Water Use Efficiency Reports and Goals
W-E Not Used
W-F City of Monroe – Water System Plan Update, Model Update & Calibration Memorandum
W-G City of Monroe Drinking Water Quality Report
W-H Coliform Monitoring Plan
W-I Disinfectant By-Product Monitoring Plan
W-J Lead and Copper Rule Compliance Monitoring Plan
W-K Emergency Response Plan Excerpt
W-L Drought Response Plan
W-M Capital Improvement Project Sheets
W-N SEPA Checklist

STORMWATER SYSTEM

SW-A Capital Improvement Project Sheets
SW-B Capital Improvement Project Opinion of Probable Project Costs (OPPC)
SW-C SEPA Checklist

THIS PAGE INTENTIONALLY BLANK.

GLOSSARY

100-year flood: The magnitude of a flood is likely to occur, on average, once every 100 years.

Average Wet Weather Flow: Wastewater flow during period when groundwater table is high and precipitation is at its peak, generally the four wet weather months, from November to February.

Class 1 Stream: A perennial or intermittent stream that is used by threatened or endangered fish or larger numbers of other fish, or that is used as a direct source of water for domestic use.

Force Main: Pressurized discharge pipe from a lift station.

Infiltration: Groundwater entering the sewage collection system through defective joints, pipes, and improperly sealed manholes.

Inflow: Sewage flows resulting from stormwater runoff entering the sewage collection system, typically through manhole covers, roof leaders, and area drains connected directly to sewer, cross connections from storm drains and catch basins, and direct flows into broken sewers.

Maximum Monthly Flow: Average daily flow during the highest flow month of the year.

Mini-Basin: Drainage catchment areas within the North Creek, Swamp Creek, Picnic Point, Everett or Little Bear Creek Drainage Basins. Mini-basins followed the King County delineation to the extent of the County's effort to define the mini-basins.

National Flood Insurance Program: Federally funded program providing flood insurance to property owners in flood plains provided the local government meets certain criteria for management of flood damage risk.

Orange Book: *Criteria for Sewage Works Design,* published by the Washington State Department of Ecology

Peak Hourly Flow: Wastewater flow during the highest flow hour.

Sensitive Area: Area in which development potential is limited by environmental factors such as steep slopes, wetlands, and valuable natural habitat.

Sewer Lateral: A sewer with no other common sewers discharging into it.

Sewer Submain: A sewer that receives flow from one or more lateral sewers.

Sewer Main or Trunk: A sewer that receives flow from one or more submains.

Sewer Interceptor: A sewer that receives flow from a number of main or trunk sewers, force mains, etc.

Urban Growth Area: Area in which urban development must be contained, as stipulated by the Growth Management Act.

THIS PAGE INTENTIONALLY BLANK.

ABBREVIATIONS

AAF	Average Annual Flow
AC	Asbestos Cement
ADA	Americans with Disabilities Act
ADD	Average Daily Demands
ADS	Advanced Drainage Systems™
ADWF	Average Dry Weather Flow
ASCE	American Society of Civil Engineers
AWWD	Alderwood Water and Wastewater District
AWWF	Average Wet Weather Flow
BMP	Best Management Practices
BOD	Biological Oxygen Demand
CEPT	Chemically Enhanced Primary Treatment
CFR	Code of Federal Regulations
CFS	Cubic Feet Per Second
CHI	Computational Hydraulics Inc.
CIP	Capital Improvement Program
City	City of Monroe
Code	Monroe Municipal Code
Corps	United States Army Corps of Engineers
CRS	Community Rating System
CWA	Clean Water Act
CWSP	Coordinated Water System Plan
CWSSA	Critical Water Supply Service Area
DCDA	Double Check Detector Assembly
DI	Ductile Iron
DMR	Discharge/Daily Monitoring Reports
DO	Dissolved Oxygen
DOG	Dumpster Outreach Group
DOH	Washington State Department of Health
DOC	Washington State Department of Corrections
DTM	Digital Terrain Model
Ecology	Washington State Department of Ecology
Ecology Stormwater Manual	2019 Stormwater Management Manual for Western Washington
EIM	Environmental Information Management
EIS	Environmental Impact Statement
EPA	United States Environmental Protection Agency

ERTS	Environmental Reporting and Tracking System
ERU	Equivalent Residential Unit
ESA	Endangered Species Act
ESCO	Energy Service Company
EWUC	Everett Water Users Committee
FEMA	Federal Emergency Management Act
FIRM	Flood Insurance Rate Maps
FM	Force Main
FOG	Fats, Oils and Greases
FPS	Feet per second
FTE	Full-Time Equivalents
FWPCA	Federal Water Pollution Control Act (“The Clean Water Act”)
GIS	Geographic Information System
GMA	Growth Management Act
GPAD	Gallons per acre per day
GPCD	Gallons per capita per day
GPD	Gallons Per Day
GPD/SF	Gallons Per Day Per Square Foot
GPM	Gallons Per Minute
HDPE	High-Density Polyethylene
HMA	Hot Mix Asphalt
HMP	Hazard Mitigation Plan
HPA	Hydraulic Project Approval
IDDE	Illicit Discharge Detection and Elimination
I/I	Infiltration and Inflow
JARPA	Joint Aquatic Resources Permit Application
KCDNR	King County Department of Natural Resources
LB/INMATE/D	Per Inmate Per Day
LID	Local Improvement Area
LIDAR	Light Detection and Ranging
MBR	Membrane Bioreactor
MG	Million Gallons
MLE	Modified Ludzack-Ettinger
MMF	Maximum Month Flow
MBR	Membrane Bioreactor
MGD	Million Gallons per Day
mg/L	milligrams per liter
mJ/cm2	Millijoules Per Square Centimeter

mL	milliliter
MDD	Maximum Daily Demand
MMC	Monroe Municipal Code
MS4	Small/Medium Municipal Separate Storm Sewer System
MSE	Mechanically Stabilized Earth
NaOCL	Sodium Hypochlorite
NaOH	Sodium Hydroxide
NEPA	National Environmental Policy Act
NFIP	National Floodplain Insurance Program
NOAA	National Oceanic and Atmospheric Administration
NPDES	National Pollutant Discharge Elimination System
NPDES Phase II Permit	National Pollutant Discharge Elimination System Phase II Municipal Stormwater General Permit
NRCS	Natural Resources Conversation Service
NWRI	National Water Research Institute
O&M	Operation and Maintenance
OCD	Washington State Office of Community Development
OFM	Washington State Office of Financial Management
OHWM	Ordinary High Water Mark
OPPC	Opinion of Probable Project Costs
PFAS	Per- and Poly- fluoroalkyl Substances
PHD	Peak Hour Demand
PHS	Priority Habitats and Species
Plan	2024 Utility Systems Plan
PLC	Programmable Logic Controller
ppd	Pounds per day
PRV	Pressure Regulating Valve
PSNGP	Puget Sound Nutrient General Permit
PSRC	Puget Sound Regional Council
Purple Book	Reclaimed Water Facilities Manual
PVC	Polyvinyl Chloride
PWWF	Peak Wet Weather Flow
QA/QC	Quality Assurance and Quality Control
RAS	Return Activated Sludge
RBC	Rotating Biological Contactors
RCP	Reinforced Concrete Pipe
RCW	Revised Code of Washington
RDII	Rain-Dependent Infiltration/Inflow

RSA	Retail Service Area
SAM	Stormwater Action Monitoring
SBC	Submerged Biological Contactor
SCADA	Supervisory Control and Data Acquisition
scfm	Standard Cubic Feet per Minute
SEPA	State Environmental Policy Act
sf	Square Feet
SFHA	Special Flood Hazard Areas
SHB	Senate House Bill
SLR	Solids Loading Rate
SMA	Satellite Management Agency
SMAP	Stormwater Management Action Plan
SnoPUD	Snohomish County Public Utility District
SOP	Standard Operating Procedures
SOR	Surface Overflow Rate
SR	State Route
SRF	State Revolving Fund
SVI	Sludge Volume Index
SWMM5	Storm Water Management Model Version 5
SWMMWW	Stormwater Management Manual for Western Washington
SWMP	Stormwater Management Program
TKN	Total Kjeldahl Nitrogen
TMDL	Total Maximum Daily Load
TSS	Total Suspended Solids
UGA	Urban Growth Area
US-2	U.S. Highway 2
USDA	United States Department of Agriculture
USFWS	United States Fish and Wildlife Service
UTC	Utilities and Transportation Commission
UV	Ultraviolet
VAR	Vector Attraction Reduction
VCP	Vitrified Clay Pipe
WAC	Washington Administrative Code
WADNR	Washington State Department of Natural Resources
WAS	Waste Activated Sludge
WASWD	Washington State Association of Sewer and Water Districts
WDFW	Washington Department of Fish and Wildlife
WEF	Water Environment Federation

WFI	Water Facilities Inventory
WRCC	Wester Regional Climate Center
WRIA	Water Resource Inventory Area
WUE	Water Use Efficiency
WWTP	Wastewater Treatment Plant

THIS PAGE INTENTIONALLY BLANK.

Chapter 1 Executive Summary

1.1 Introduction

This 2024 Utility Systems Plan (Plan) for the sanitary sewer, water, and stormwater utilities was developed as a supportive document to the City of Monroe's (City) Comprehensive Plan. This Plan is mandated by the Revised Code of Washington (RCW) 36.70A.130 (5a) and is to be submitted as part of the Comprehensive plan in September of 2024, with approval from the Washington State Department of Health (DOH) (water system plan) and the Washington State Department of Ecology (Ecology) (sanitary sewer and stormwater system plans). This Plan consists of several elements including utility system plans for the City-provided and City-owned utilities. Chapter 2 – Introduction outlines the regulatory requirements of the plan and where in the text these requirements are fulfilled. The Comprehensive Plan is being prepared by MIG. The evaluation of these three utility systems is presented and bound in this volume.

As there are elements that are common to each of the three plans, the organization of this volume seeks to minimize repeated presentation of the same information. Consequently, the first chapters of this volume are common to all the utilities and are presented once. The utility-specific information is compiled and presented in separate sections of this volume. The City Council approval of these plans as well as the meeting minutes from the session are included as Appendix CE-B.

Baseline population and population projections were forecasted using data from the Puget Sound Regional Council (PSRC). These forecasts were assessed on a sewer basin level for the sanitary sewer utility and on a pressure zone level for the water system utility. The stormwater system is less dependent on population and was not included in population forecasting efforts. Note that the sanitary sewer system service area is limited to the Urban Growth Area (UGA) boundaries, while the water system extends to the north and west of the UGA to the extents of the City's water service area boundary. Typical population equivalence schemas were applied to the sanitary sewer and water to establish the future loadings and demands for these systems. The population projects, system deficiencies, and CIP program costs are considered for the next 20 years for each system as applicable. The compiled document for these system utility plans is presented as follows:

Combined Elements

Chapter 1	**Executive Summary.** Presents the projected flows a summary and prioritization of the CIPs.
Chapter 2	**Introduction.** Provides an overall history of the City's utilities, organization of the system plans, and regulations that govern the utility plans.
Chapter 3	**Land Use and Service Areas.** Presents the land use, topography, and service areas for each of the three utilities.

Sanitary Sewer (SS)

Chapter SS 4	**Existing Wastewater Facilities.** Defines the sewer basins and the wastewater infrastructure, including the collection system, lift stations, and wastewater treatment plant.

Chapter SS 5 **Existing and Future Population and Flow Projections**. Presents existing and projected population, consisting of residential, employment, and the Department of Corrections (DOC), for each of the sewer basins. The accompanying flows by drainage basin are also presented.

Chapter SS 6 **Sanitary Sewer System Analysis**. Presents sewer basin delineation and hydraulic model development, calibration, and analysis.

Chapter SS 7 **Wastewater Treatment Plant**. Presents an evaluation of the performance of the treatment plant in relation to the NPDES limitations. Evaluates projected flows to determine the improvements needed to ensure compliance in the coming years.

Chapter SS 8 **Wastewater Reclamation and Reuse**. Evaluates the feasibility of reclaiming effluent from the WWTP and reusing it in the City.

Chapter SS 9 **Operations and Maintenance Program**. Defines the Operations and Maintenance (O&M) procedures associated with the sanitary sewer utility. Estimates the employees required in the future.

Chapter SS 10 **Collection System Facilities Design and Construction Standards**. Reviews the policies and standards for the planning, design, operation, and management of the sewer system.

Chapter SS 11 **Capital Improvement Program**. Presents the CIP for the collection, conveyance, treatment, and discharge components of the sanitary sewer utility. Provides Opinion of Probable Project Costs (OPPC).

Chapter SS 12 **Sanitary Sewer Financial Plan.** Presents the sanitary sewer utility CIP and presents impacts on rate structure.

Water (W)

Chapter W 4 **Description of Water System**. Describes the source of supply, extent, neighboring utilities, and agreements with other agencies.

Chapter W 5 **Basic Planning Data**. Presents the existing and projected population, consisting of residential, employment, and student for the water service boundary. This includes historical usage and seasonal patterns in system demand.

Chapter W 6 **System Analysis and Asset Management**. Presents the hydraulic model development and calibration. Identifies deficiencies and development of CIPs. Includes a snapshot of the City's Water System Asset management.

Chapter W 7 **Water Use Efficiency Program**. Discusses Water Use Efficiency (WUE) reports, assessment of performance with respect to previously presented WUE goals, and proposed WUE goals.

Chapter W 8 **Source Water Protection**. References the City of Everett's Comprehensive Water Plan.

Chapter W 9 **Operations and Maintenance Program**. Defines the O&M issues associated with the water utility. Estimates the FTEs required for the future.

Chapter W 10	**Distribution Facilities Design and Construction Standards**. Highlights the City's design and construction standards with references and hyperlinks to codified regulatory requirement documentation.
Chapter W 11	**Capital Improvement Program**. Describes the City's planned capital projects over the next 20 years with a stronger emphasis on the next 10 years supporting.
Chapter W 12	**Water System Financial Plan.** Presents the water utility CIP and presents impacts on rate structure.

Stormwater (SW)

Chapter SW 4	**Existing Stormwater Facilities**. Describes the watersheds and stormwater infrastructure.
Chapter SW 5	**Current Stormwater Management Utility Program**. Describes the structure of the stormwater utility, current staffing levels, and O&M requirements associated with the stormwater utility.
Chapter SW 6	**Regulatory Requirements**. Presents the regulatory requirements associated with the stormwater utility.
Chapter SW 7	**Future Program Needs**. Reviews the current stormwater management program and the recommended improvements to the program.
Chapter SW 8	**Problem Identification**. Presents the problem areas reviewed; hydrologic and hydraulic modeling; CIP development, recommendations, and OPPCs.
Chapter SW 9	**Recommendations**. Defines the CIP and O&M issues associated with the stormwater utility. Provides an estimate of the manpower required in the future.
Chapter SW 10	**Stormwater Financial Plan.** Presents the stormwater utility CIP and presents impacts on rate structure.

1.2 Projected Sanitary Sewer Flows, Loads and Analysis

The hydraulic capacity analysis of the City's existing sanitary sewer system was performed using PCSWMM software, by Computational Hydraulics Inc. (CHI). The model was developed using information from the City's Geographic Information System (GIS). Supplemental data included selected as-built drawings, pump curves, wet well size and level controls, flow monitoring data, and other available data such as ground elevation Light Detection and Ranging (LIDAR) information. The model leveraged historical data from the treatment plan to assign dry weather flow loadings and develop infiltration and inflow (I&I). The future conditions consider increases in dry weather flow with increases in population and considers pipe degradation which results in increased I&I in the future and build out conditions.

With this constructed model, assumptions, and flow projections, the model was used to simulate the system's performance and identify potential deficiencies in the conveyance system based on criteria determined through industry standards and discussions with City staff. The developed model was used to assess the system's deficiencies, and determine resolution of these system deficiencies, included in Chapter SS 6 – Sanitary Sewer System Analysis, through the capital improvement program for the sanitary sewer utility, included in Chapter SS 11 – Capital Improvement Program.

1.3 Projected Water Demands and Analysis

A hydraulic analysis of the existing City water system was undertaken using Autodesk's InfoWater Pro which runs EPA Net 2.2 as the hydraulic engine. This model includes source connections to the City of Everett Transmission Main No. 5 as well as the City owned transmission mains, distribution system piping, reservoirs, pump stations, and pressure reducing valve stations.

Model scenarios were developed to represent the water system subjected to existing, 2034, and 2044 planning horizons with system demand developed for average day demand, max day demand, and peak hour demand in keeping with DOH and Washington Administrative Code (WAC) requirements. Water demands were developed and presented in Chapter W 5 – Basic Planning Data which includes the development of the population equivalence to convert from employment to population, an equivalent residential to establish typical demand per attached residential connection, and a population per connection at the system level.

1.4 Stormwater Improvements and Analysis

The Stormwater Utility System Plan is significantly different from the content and format of either the sanitary sewer or water system plans. The requirements for both the sanitary sewer and water systems are specifically mandated by the respective section in the WAC. The Stormwater System Plan, on the other hand, focuses on the current and future system operation, capital improvement planning, and policies needed to meet the requirements of the National Pollutant Discharge Elimination System (NPDES) Phase II Municipal Stormwater General Permit, administered by the Washington State Department of Ecology (Ecology).

Where the sanitary sewer and water system utilities are directly impacted by growth and new development, the stormwater utility is not sensitive to changes in residential and employment populations. Though new development brings more impervious land coverage, redevelopment or more intense use of already developed parcels has minimal impact on the volume of stormwater runoff. This is because the stormwater regulations for redevelopment require the developer to manage stormwater on site and discharge surface water flows at predeveloped rates. Consequently, population projections used in the sanitary and water utilities are not as meaningful for the stormwater utility.

The stormwater CIP evaluated over 30 problem areas and recommended 24 projects for the CIP. The description, analysis and recommended solution of these problem areas are presented in Chapter SW 8 – Problem Identification. Recommended CIPs addressed issues including water quality, flooding, limited access for O&M, combined sewer separation, and safety issues. Site-specific stormwater modeling was completed for two known stormwater problem areas located in the northwestern area of the City, in the Fryelands Industrial Park.

Recommendations to satisfy the NPDES requirements are presented in Chapter SW 7 – Future Program Needs. These recommendations include Tier 1 and Tier 2 Actions, where:

- Tier 1 Actions are essential to the ongoing mission of the Stormwater Management Utility. Noted items are needed for compliance with the NPDES Phase II Permit and have requirements that are to be addressed on a specific timeline.

- Tier 2 Actions are highly valuable for the Stormwater Utility in pursuit of its mission. Actions include maintaining and improving existing programs and long-term planning.

1.5 Capital Improvements Projects

The CIPs developed in the respective plan chapters are presented by time period. Cost estimates for each CIP was prepared based on current year (2024) pricing escalated by 3.0 percent per year for the first six years and escalated by 2.4 percent from year seven to year twenty. Many of these projects are based upon obsolescence and were assigned a target period for completion based upon the current condition of the existing infrastructure in combination with the estimated remaining service life. For projects that are planned in response to a need for increased system capacity, completion dates are based on the expectation that growth in the area will occur at that time.

More detail on the CIP for each utility is included in Chapter SS 11, Chapter SW 9, and Chapter W 11. The financial plan chapters following the CIP chapters by utility as Chapter SS 12, Chapter SW 10, and Chapter W 12; these chapters were prepared by FCS Group. Figure 1-1 shows a map of these CIP projects as well as the priority replacement piping for the sanitary sewer and water utility.

THIS PAGE INTENTIONALLY BLANK.

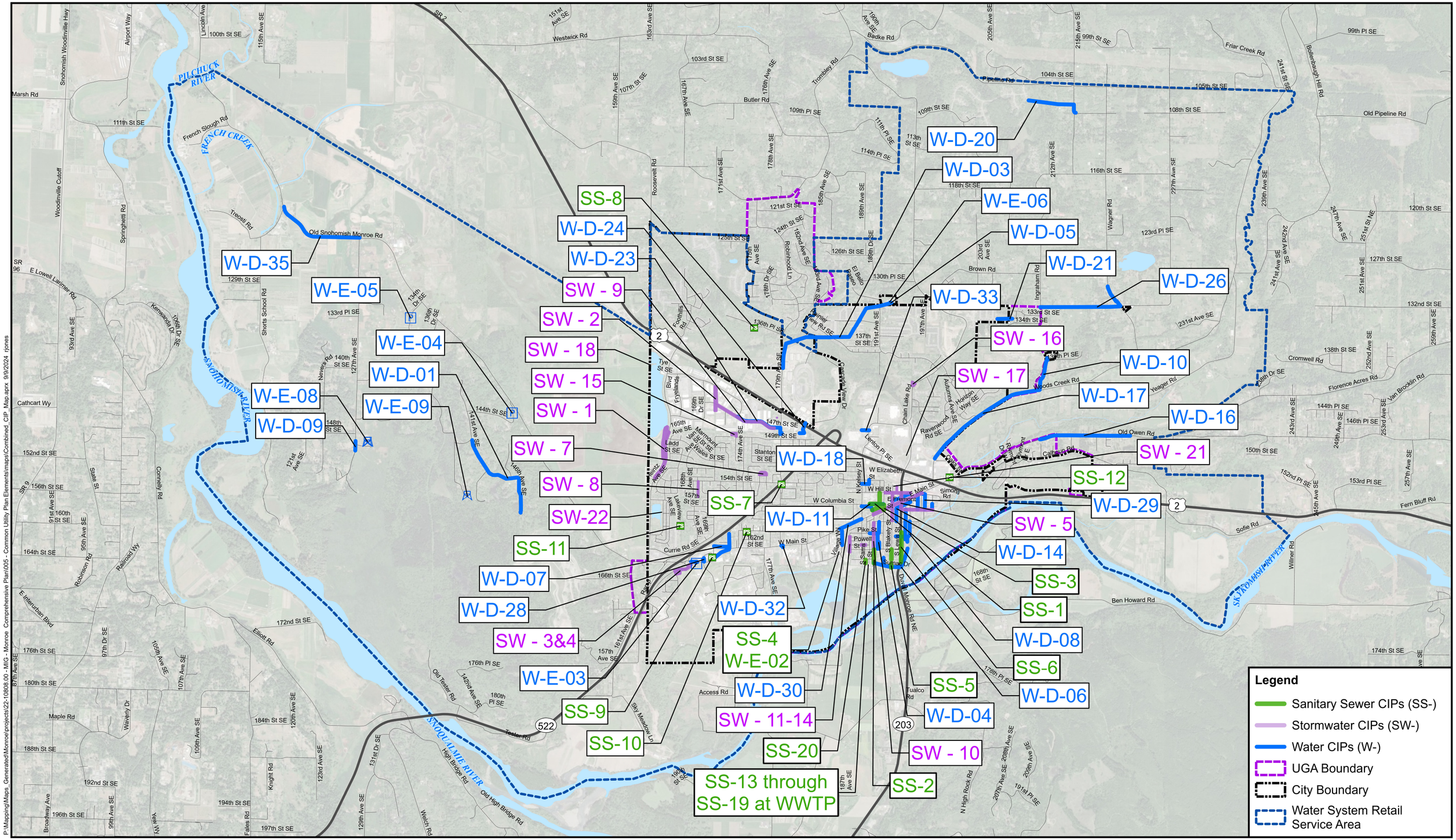

Sanitary Sewer, Stormwater and Water System: City of Monroe 2024

Snohomish County base data: 2024

Background Imagery: Maxar

Data sources supplied may not reflect current or actual conditions. This map is a geographic representation based on information available. It does not represent survey data. No warranty is made concerning the accuracy, currency, or completeness of data depicted on this map.
BHC Consultants LLC., assumes no responsibility for the validity of any information presented herein, nor any responsibility for the use or misuse of the data.

N

0 0.5 1 2 Miles

Sanitary Sewer, Stormwater, and Water Utility CIPs

Utility Systems Plan - Common Elements
City of Monroe, Washington
September 2024

Figure **1-1**

COPYRIGHT © 2024 BHC CONSULTANTS LLC., ALL RIGHTS RESERVED

P:\Mapping\Maps Generated\Monroe\projects\22-10808.00 - MIG - Monroe Comprehensive Plan\005 - Common Utility Plan Elements\maps\Combined_CIP_Map.aprx 9/9/2024 rjones

THIS PAGE INTENTIONALLY BLANK.

Chapter 2 Introduction

2.1 System Utility Plan Update Roadmap

The 2024 Utility Systems Plan (Plan) is prepared for the City as supportive documentation to the City's Comprehensive Plan. Each utility plan has a set of criteria that must be adhered to for plan approval. Table 2-1 itemizes the Washington Administrative Code (WAC) 173-240-050 requirements and the location in the document where these requirements are met. Table 2-2 itemizes the WAC 246-290-100 requirements and the location in the document where these requirements are met. Table 2-3 itemizes the elements for the Stormwater plan and the location of the document where these items are included.

Table 2-1
Sanitary Sewer Utility Plan Requirements Per WAC 173-240-050

Reference Paragraph	Description of Requirement	Location in Document
3a	Purpose and Need for Proposed Plan	Section 1.1
3b	Who Will Own, Operate, and Maintain System	Section 2.2
3c	Existing and Proposed Service Boundaries	Chapter SS 4
3d	Layout Map Showing Boundaries; Existing Sewer Facilities; Proposed Sewers; Topography and Elevations; Streams, Lakes; and Other Water Bodies; Water Systems	Figures 3-1, 3-2
3e	Population Trends	Chapter SS 5
3f	Existing Domestic and/or Industrial Wastewater Facilities Within 20 Miles	Figure SS 4-1
3g	Infiltration and Inflow Problems	Section SS 5.4
3h	Treatment Systems and Adequacy of Such Treatment	Chapter SS 7
3i	Identify Industrial Wastewater Sources	Section SS 5.2.1
3k	Discussion of Collection Alternatives	Chapter SS 6
3k	Discussion of Treatment Alternatives	Chapter SS 7
3k	Discussion of Disposal Alternatives	Chapter SS 7
3l	Define Construction Cost and O&M Costs	Chapter SS 11 and Appendix SS-F
3m	Compliance with Management Plan	Section 3.3.1
3n	SEPA Compliance	Appendix SS-I
OTHER REQUIREMENTS / ELEMENTS		
SSSHB 1338	Water Reuse	Chapter SS 8
CMOM	Capacity, Maintenance, Operation and Management	Chapter SS-9

Table 2-2
Water System Utility Plan Requirements Per WAC 246-290-100

Reference Paragraph	Description of Requirement	Location in Document
4(a)	**Description of the System**	**Chapter 2, 3, W 4, W 9**
4(a)(i)	Ownership and Operations and Maintenance (O&M) responsibilities	Chapter 2, Section 2.2 Chapter W 9
4(a)(ii)	System History and Background	Chapter 2, Section 2.3.2
4(a)(iii)	Related Plans	Chapter W 4, Section W 4.3
4(a)(iv)	Service Area Boundaries	Chapter W 4, Figure W 4-1
4(a)(v)	Service Area Characteristics	Chapter 3
4(a)(vi)	Satellite Management	Chapter W 4, Section W 4.5.6
4(b)	**Basic Planning Data**	**Chapter 3, W 5**
4(b)(i)	Current Population Water Use and ERUs	Chapter W 5, Section W 5.1.1
4(b)(ii)	Sufficient Water Production and Consumption Data to Identify Trends	Chapter W 5, Section W 5.2
4(b)(iii)	Designated Land Use	Chapter 3, Figure 3-4
4(c)	**Demand Forecast**	**Chapter W 5, Section W 5.7**
4(d)	**Water Demand 6 & 20 Years**	**Chapter W 5, Section W 5.7**
4(e)	**System Analysis**	**Chapter W 6, W 9, W 10**
4(e)(i)	System Design Standards	Chapter W 6, Section W 6.3 Chapter W 10, Appendix CE-A
4(e)(ii)	Water Quality Analysis	Chapter W 6, Section W 6.2 Chapter W 9, Section W 9.3
4(e)(iii)	Inventory and Analysis of Water System Facilities	Chapter W 6, Section W 6.1 Appendix W-E
4(e)(iv)	Summary of System Deficiencies	Chapter W 6, Section W 6.5
4(f)	**Water Resource Analysis**	
4(f)(i)	Water Use Efficiency Program	Chapter W 7
4(f)(ii)	Source of Supply Analysis	Chapter W 8
4(f)(iii)	Water Shortage Response Plan	Chapter W 9, Section W 9.4
4(f)(iv)	Water Right Self-Assessment	Chapter W 6, Section W 6.4.1
4(f)(v)	Water Supply Reliability Analysis	Chapter W 6, Section W 6.4.1
4f(vi)	Interties	Chapter W 6, Section W 6.1
4(f)(vii)	Evaluation of Reclaimed Water	Chapter W 9, Section W 9.5
4(g)	**Source Water Protection**	**Chapter W 8**
4(h)	**O&M Program**	**Chapter W 9**
4(i)	**Capital Improvement Program**	**Chapter W 11**
4(j)	**Financial Program**	**Chapter W 12**

Reference Paragraph	Description of Requirement	Location in Document
4(j)(i)	Summary of Past Income and Expenses	Chapter W 12, Section W 12.2
4(j)(ii)	A Balanced Operational Budget	
4(j)(iii)	A Plan for Collecting Revenue to Fund the Utility	Chapter W 12, Section W 12.3
4(j)(iv)	Financial Evaluation	Chapter W 12, Section W 12.7
4(k)	**Other Documents**	
4(k)(i)	Document of SEPA Compliance	Appendix W-N
4(k)(ii)	Agreements	
4(k)(iii)	Comments from Local Government With Jurisdiction and Adjacent Agencies	Appendix W-C
OTHER REQUIREMENTS / ELEMENTS		
	Public Information and Public Hearings/Meetings	Appendix CE-B

Table 2-3
Stormwater System Utility Plan Requirements

Reference Paragraph	Description of Requirement	Location in Document
	Purpose for Plan	Section 2.1 and Chapter SW 9
	History	Section 2.3.3
	Utility Goals and Policies	Chapter SW 5
	Public Involvement	Appendix CE-B
	Study Area Description Existing System Watershed	Chapter SW 4
	Stormwater Utility Description	Chapter SW 4
	Current Stormwater Management Utility Program	Chapter SW 5
	Regulatory Requirements	Chapter SW 6
	Future Stormwater Program Needs	Chapter SW 7
	Stormwater Capital Improvement Program	Chapter SW 8
	Problem Identification and Hydraulic Model Analysis	Chapter SW 8
	Recommendations for the Stormwater Program	Chapter SW 9
	Financial Analysis	Chapter SW 10
OTHER REQUIREMENTS / ELEMENTS		
	Public Information and Public Hearings/Meetings	Appendix CE-B

The Plan provides a comprehensive guide to assist the City with managing and operating the three utilities and coordinating expansions and upgrades to the infrastructure for the next twenty years. The Plan serves as a guide for policy development and decision making for the City. It also provides other agencies and the public with information on the City's plans for utility extensions within the City's service area. This approach allows the City to provide high quality service to its customers and to continue protecting environmental quality.

The Plan evaluates existing and future capacity of the utility systems based on current demand and anticipated future growth. Future sanitary and water flow rates are estimated from existing flow data and Puget Sound Regional Council (PSRC) population growth projected within the service areas.

An implementation plan is provided, including an estimated timeline for constructing selected projects. The financial analysis and the means by which the improvements were to be financed were addressed in Chapters SS 12 – Sanitary Sewer Financial Plan, SW 10 – Stormwater Financial Plan, and W 12 – Water System Financial Plan.

2.2 Ownership and Management

The City owns and maintains public utilities for the sanitary sewer, water, and stormwater systems which are governed by the Mayor and City Council. The City's public works department operates the utilities and implements the policies of the Mayor and City Council. The Public Works Department organizational chart is included in Figure 2-1.

2.3 System Histories and Background

The City is located in southeastern portion of Snohomish County, immediately north of the King County – Snohomish County boundary, as shown on Figure 2-2. The City's corporate boundary is not contiguous to any other municipality.

2.3.1 Sanitary Sewer System

The City was incorporated in 1902 but a sanitary sewer system was not developed until the 1940s. The original wastewater treatment plant (WWTP) was constructed in the 1950s and was limited to primary sewage treatment. This original plant was located on the same parcel as the current plant.

The treatment plant was upgraded to add secondary treatment using rotating biological contactors (RBC) for biological treatment in 1975. In addition, this upgrade included influent pumps, an aerated grit chamber, three side hill screens, two rectangular secondary clarifiers, two chlorine contact chambers, two aerobic digesters, and a new outfall to the Skykomish River.

In 1995, another treatment plant expansion took place as a result of increased service areas within the City and additional flows resulting from that growth. This expansion included the construction of two rectangular primary clarifiers, four submerged biological contactors (SBC), a new circular secondary clarifier, an additional aerobic digester, and an effluent pump station.

In 2000, the next modification to the plant included three new activated sludge aeration basins with anoxic zones, a new secondary clarifier, an effluent ultraviolet disinfection system, and a belt filter press.

Effective: January 2024

CITY OF MONROE PUBLIC WORKS
Organizational Chart

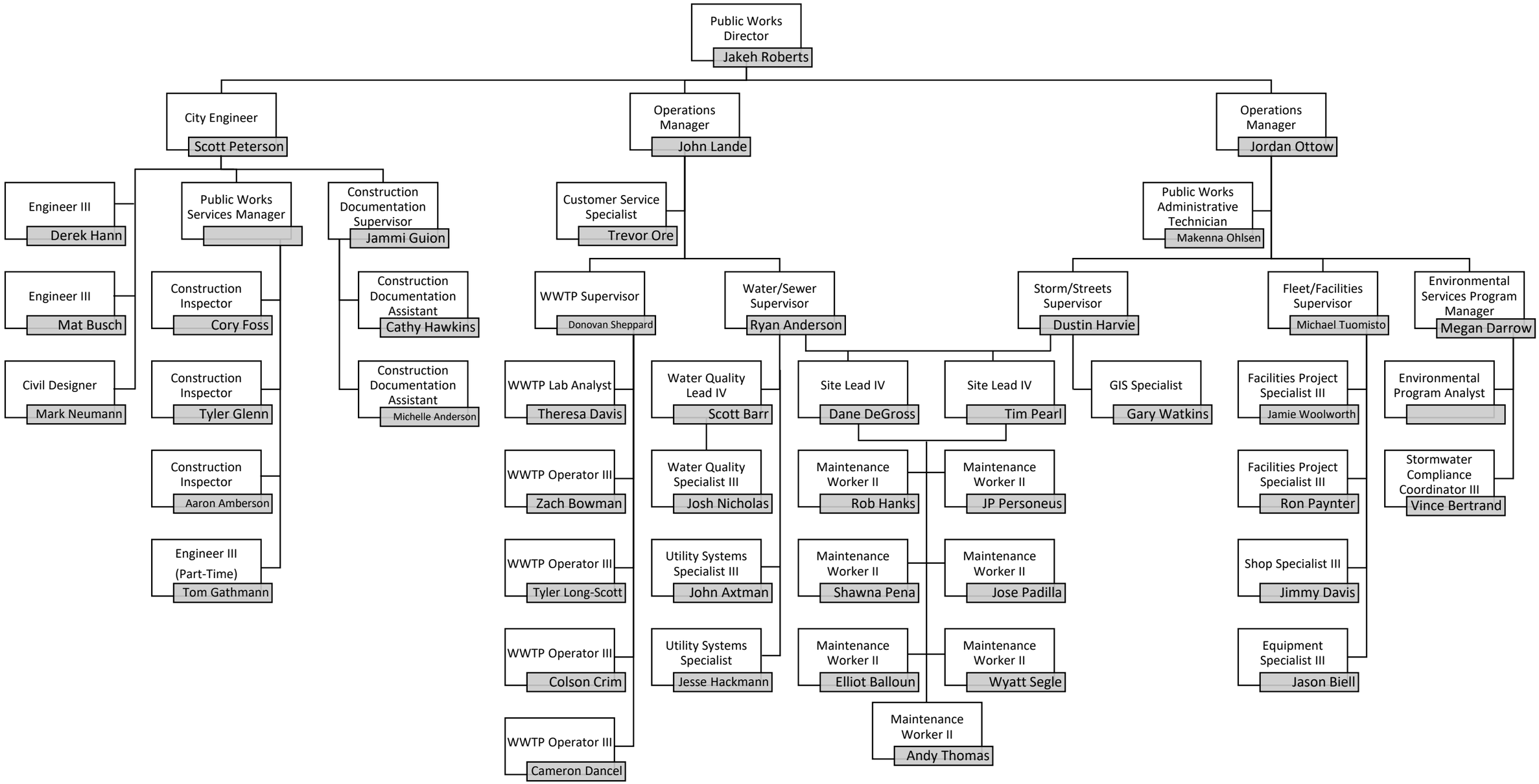

THIS PAGE INTENTIONALLY BLANK.

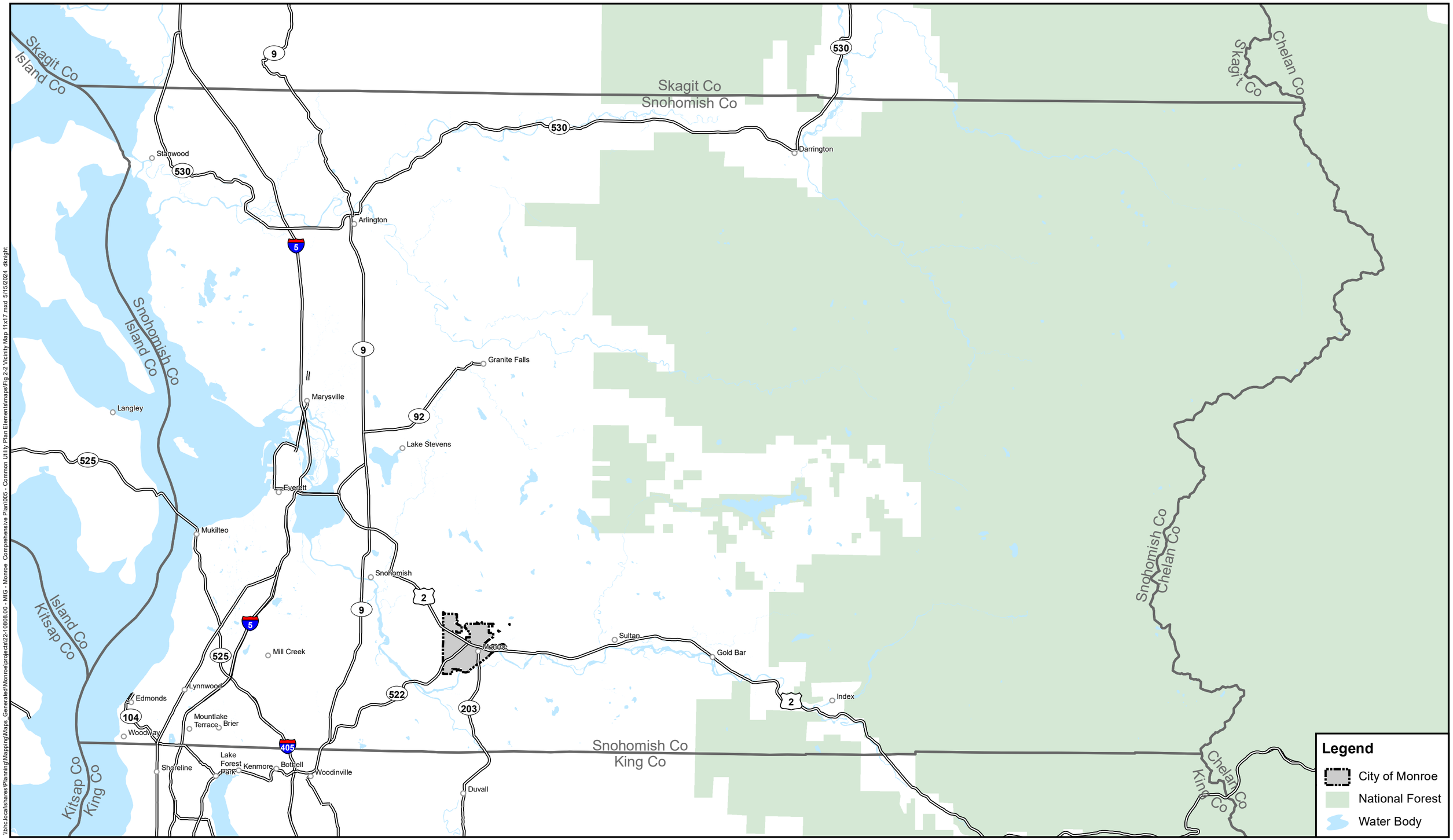

\\bhc.local\shares\Planning\MappingMaps_Generated\Monroe\projects\22-10808.00 - MIG - Monroe Comprehens.ive Plan\005 - Common Utility Plan Elements\maps\Fig 2-2 Vicinity Map 11x17.mxd 5/15/2024 dknight

City: City of Monroe 2024

Snohomish County base data 2021

Data sources supplied may not reflect current or actual conditions. This map is a geographic representation based on information available. It does not represent survey data. No warranty is made concerning the accuracy, currency, or completeness of data depicted on this map.
BHC Consultants LLC., assumes no responsibility for the validity of any information presented herein, nor any responsibility for the use or misuse of the data.

N

0 5 10 Miles

City of Monroe Vicinity Map

Utility Systems Plan - Common Elements
City of Monroe, Washington
September 2024

Figure
2-2

COPYRIGHT © 2024 BHC CONSULTANTS LLC., ALL RIGHTS RESERVED

THIS PAGE INTENTIONALLY BLANK.

In 2010, modifications to the plant included new headworks and grit collection facility and upgrades to the ultraviolet disinfection system.

Additional facility improvements starting in the mid-2010s have been through the Washington State Department of Enterprise Services energy savings performance contracting mechanism with Trane as the energy service company (ESCO) partner. The upgrades included digester blower replacement, aeration basin blower replacement, aeration basin diffuser upgrades, installing submersible mixers in the aeration basin anoxic zones, new aerobic digester diffusers, replacement of the collector mechanisms in both primary clarifiers and the older secondary clarifier, replacement of the dewatering polymer system, replacement of an odor scrubber, modifications to an existing odor scrubber, and addition of sludge thickening.

The WWTP liquid stream consists of a headworks structure with two mechanical fine screens, an influent lift station, and a mechanical vortex type grit removal system that provides preliminary treatment. The screened and de-gritted influent flows by gravity through two rectangular primary clarifiers, three aeration basins with anoxic and aerobic zones, two circular secondary clarifiers, ultraviolet light (UV) disinfection, and an effluent pump station. The disinfected WWTP effluent is discharged to the Skykomish River via a 30-inch diameter final effluent pipe and four 12-inch diameter outfall diffusers.

In the fall of 2016, the WWTP outfall diffuser pipe system within the Skykomish River was found to be damaged. A condition assessment was conducted in late 2016, followed by design and implementation of repairs in the summer of 2017.

2.3.2 Water System

Prior to incorporation, water from a "spring on the hill back of Fern Bluff" was provided by J. E. Dolloff of the Spring Water Company by franchise issued by the Snohomish County Commissioners[1]. Soon after incorporation the City Council granted a water service contract to Mr. S. A. Buck using water from wells on Buck Island and filtered water from the Skykomish River. In 1905 Mr. Buck turned his water system over to the Monroe Water and Light Company which used two steam pumps located on Buck Island to provide 750 gallons per minute at 90 pounds per square inch. In January of 1905 there were 118 customers of the water system. After years of legal challenges between Buck and Dolloff the City developed its own gravity water system using Sykes Springs, located approximately eight miles north of town as the supply[1].

Sometime between 1905 and 1937, the City developed a well field on Ingraham Hill. In 1937, "faced with a rapidly depleting reservoir and a highly unsatisfactory condition at the pumping station"[2] the City investigated connecting to the City of Everett pipeline. It appears that this went no farther than investigating as the March 1954, Report of Preliminary Survey of Town of Monroe Domestic Water System states "water for the Town of Monroe is obtained by pumping from a well located about two miles from the town"[2].

In 1963, the City began purchasing water from the City of Everett from a wood stave pipeline north of the City. At this time the use of all other sources was discontinued due to the high levels of iron and manganese in the water. The City of Everett replaced the wooden main in 1969 with a 51-inch steel pipe that is known as Transmission Main #5.

[1] Robertson, Nellie E. 1996. Monroe: The First Fifty Years 1860-1910. Monroe: Bill and Nellie Robertson.

[2] Robertson, Nellie E. 2002. Monroe: The Next Thirty Years 1911-1940. Monroe: Nellie E. Robertson.

The City grew with an average rate of 2.2 percent per year from its incorporation in 1902 until 1988 when the population was 3,350. During this time timber and dairy farming dominated the area's economy. System improvements during this time included:

Ingraham Hill Reservoir

The Ingraham Hill Reservoir is an open in-ground 1.15-million-gallon reservoir built in 1920.

Wagner Road Transmission Main

The Wagner Road transmission main is 14,000 feet of 12 inch main installed in 1963 when the City connected to the City of Everett system.

179th Avenue Distribution Main

The 179th Avenue distribution main was constructed in 1974 from U.S. Highway 2 (US-2) to Main Street to serve the developing west side of the City.

Chain Lake Road Transmission Main

The Chain Lake Road transmission main is 21,000 feet of 12 and 16 inch main installed in 1977 to connect the west side of the City to the Everett supply.

Trombley Hill Reservoir

The Trombley Hill Reservoir is a 2.0-million-gallon steel reservoir constructed in 1984.

Brown Road Transmission Main

Brown Road transmission main is 5,500 feet of 16-inch main installed in 1984 to connect the Wagner Road and Chain Lake transmission mains.

The City began to grow rapidly, as the timber and farm industries declined, thanks to the easy access provided by the three state highways. The City's population almost doubled to 6,480 by 1996. The population of the City more than doubled to 17,660 by 2014[3]. This increase came partially from annexation of additional area, but the majority was from new development. The City has taken on some of the character of a bedroom community. Many of the occupants of the new residential subdivisions commute to work in the Everett/Seattle/Bellevue area. In addition to providing housing, the City also has a thriving industrial area and numerous commercial operations, including four grocery stores and three new car dealerships. In response to this rapid growth, significant changes have taken place in the water system. The major capital improvements include:

Ingraham Hill Reservoir

The Ingram Hill Reservoir is a 2.0-million-gallon steel reservoir built in 2001 to replace the original Ingraham Hill reservoir.

Washington State Department of Corrections (DOC) Reservoir

The DOC Reservoir is a 750,000-gallon reservoir along with a 1,100 gallon per minute booster pump station from the DOC in 2001.

[3] Washington State Office of Financial Management. 2014. April 1, 2014 Estimated Population. Olympia, WA.

Tester Road Booster Pump Station

The Tester Road Booster Pump Stations is a 1,500 gallon per minute booster pump station to supply the DOC and Monroe High School.

North Hill Reservoir and Booster Pump Station

The North Hill Reservoir and Booster Pump Station is a 1.15-million-gallon reservoir and 1,500 gallon per minute booster pump station to supply the upper pressure zone of the system.

Reservoir #5 Trombley Hill Reservoir and Booster Station

Reservoir #5 Trombley Hill Reservoir and Booster Station is a 2.5-million-gallon steel reservoir and booster pump station housing one 50 gallons per minute (gpm), two 250 gpm and one 3,300 gpm pumps built in 2006 provides storage for the Everett, Trombley, Airport, DOC and the City's Downtown pressure zones.

In addition to the major system improvements listed above, the water distribution system has expanded significantly in the west area of the City and along the Chain Lake Road corridor.

As growth has occurred in the water service area, the City has been responsible for the installation of transmission facilities and storage reservoirs. The developers of an area have generally installed distribution mains. The northward expansion of suburban residential development has led to a problem. In 1963 and 1975 the transmission mains were installed in a rural area. The few homes that existed were served by individual wells. Rather than requiring the installation of a distribution main parallel to the transmission mains, direct service connections were allowed. Initially this was not a problem, but as growth has continued the usable capacity of these mains has been reduced by the need to maintain 30 pounds per square inch pressure at the service connection.

In the future, the City plans to continue the practice of installing the transmission and storage portions of the water system. However, transmission mains will be designated as such and service connections will not be allowed.

In 2013 and 2014, the City acquired the Sky Meadow Water Association. With this acquisition, the City acquired the following water system facilities:

Lord Hill Reservoirs

The Lord Hill A and B reservoirs are 25,000-gallon steel and 120,000-gallon concrete reservoirs, respectively.

Spring Hill Reservoirs

The Spring Hill A and B reservoirs are two 50,000-gallon concrete reservoirs.

Lord Hill Pump Station

The Lord Hill Pump Station includes a 235 gpm pump station.

Spring Hill Pump Station

The Spring Hill Pump Station is a 160 gpm pump station.

Sky Meadow Distribution System

The Sky Meadow distribution system piping, hydrants, valves, and pressure reducing valve stations.

Since the acquisition of the Sky Meadow Water Association, the City has increased storage at the DOC tank site and has added operational flexibility to the system and focused on maintaining their system with pipe main replacements. The population in the City has grown by approximately 40 percent since 2014.

DOC Reservoir 2

The DOC Reservoir 2 was constructed in 2022 as a steel, 0.85 million gallons (MG) reservoir mitigating the DOC 330 zone's storage deficit in this zone.

199th Avenue and 204th Avenue Pressure Reducing Valve Stations

Increase connectivity and transmission to the Farm 440 pressure zone. The 199th Avenue pressure regulating valve (PRV) station and 204th Avenue PRV stations were constructed in 2020 and 2023 respectively. Both PRV Stations include a lead and lag PRV of diameter 3-inch and 8-inch respectively.

There are no plans to expand the water system service area at this time. The next few years will focus on replacing the City's asbestos cement piping.

2.3.3 Stormwater System

The City created its Stormwater Management Utility in 1996. The Public Works Department carries out the majority of the programmatic and field-based stormwater tasks.

The Stormwater Management Utility program consists of numerous program elements. These elements are organized into the following categories based on the department or departments that perform the program element work.

- Design and Construction Division Stormwater Services and Capital Improvement Program.
- Operation and Maintenance Division Stormwater Services.
- Program Support and Administration.

The City lies in the Skykomish River valley at the base of the Cascade foothills. The Skykomish River borders the City on the south. Most of the businesses and residences within the City are located well above the 100-year floodplain. Woods Creek essentially forms the eastern border of the City; although, a small section of the City lies south and east of the creek. The majority of the City, including the commercial corridor along US-2, the Fryelands development, and the developing areas north of US-2, lies within the French Creek watershed. French Creek, in turn, flows into the Snohomish River several miles west of the City.

The majority of the City is built on very shallow slopes, typically less than 0.5 percent. The soils within these flat areas are composed of loamy silty sands, which are well suited to farming activities. Beneath these soils lie areas of deep, well-draining recessional outwash gravels. The City utilizes this natural infiltration capability to assist with control of stormwater runoff.

Due to an increase in impervious surfaces and urbanization, as well as regulatory changes, stormwater quality management has become an important issue. Water quality degradation due to stormwater runoff can occur from many different sources. Stormwater runoff carries sediment from exposed construction sites and pollutants from residential, commercial, and industrial developments as well as agricultural areas into streams and other water bodies. Pollutants in stormwater runoff include metals such as lead, cadmium, zinc, and copper; oil and grease; pesticides and fertilizers; and bacteria. Urbanization within the Puget Sound basin has increased impervious surface areas such as rooftops, streets, and parking areas. Without stormwater control, impervious surfaces increase runoff volumes and peak flow rates. The increased pollutant loads and increased volumes of stormwater runoff result in impacts to downstream properties and downstream water bodies. Increased impervious surfaces also reduce the potential for stormwater infiltration. Following the listing of Puget Sound salmon species under the federal Endangered Species Act (ESA) and federal regulations under the National Pollution Discharge Elimination System (NPDES), implementation of stormwater control measures has become increasingly important.

Approximately two-thirds of the City's stormwater conveyance system consists of pipe. Pipes range in size from eight inches to forty-eight inches in diameter and convey stormwater via outfalls into the receiving waters identified in Figure SW 4-2. Some stormwater systems have storage or water quality treatment structures built into them. The City owns approximately 78 miles of stormwater pipe with the pipe inventory consisting primarily of polyvinyl chloride (PVC), high density polyethylene (HDPE), corrugated metal pipe, and concrete pipe. A portion of the downtown area is a combined sanitary/stormwater sewer which discharges to the wastewater treatment plant.

Culverts

Culverts are short sections of pipe used to convey stormwater/streamflow and which generally connect open ditches or streams either under or adjacent to roads. Culvert are often made of concrete or corrugated metal. There are approximately 240 culverts within the City storm drainage system.

Catch Basins

Catch basins are underground structures with sumps that are used to collect stormwater. In the City, most catch basins discharge directly into a piped conveyance system. The sump at the bottom of a catch basin is used to capture sediment and other debris from incoming stormwater. Some catch basins are equipped with trapped outlets, designed to minimize the discharge of floating debris and oil from the catch basin. The City owns 3,501 catch basins that are connected to stormwater conveyance piping. Approximately ten catch basins in the City do not connect to a piped storm drain system but instead serve as a point for infiltration for stormwater runoff. These types of catch basins are called "rock holes" and are located in the residential neighborhoods in the southeastern portion of the City between Main Street and the Skykomish River.

Ditches

Ditches are constructed earth trenches lined with vegetation or concrete that convey stormwater in areas not served by piped conveyance systems. The City owns approximately 15 miles of ditches.

Biofiltration Swales

Biofiltration swales are grass-lined, flat-bottomed ditches whose purpose is to filter stormwater runoff to provide water quality treatment. They differ from ditches in that the vegetation must be appropriately maintained to function properly. The shape, slope, width, and length of the swales are specifically designed

to achieve appropriate levels of water quality treatment. Most of the biofiltration swales in the stormwater drainage system are privately owned. The City owns eight biofiltration swales.

Retention/Detention Ponds and Underground Storage Facilities

Retention/detention ponds and underground storage facilities (such as vaults and pipes) store stormwater runoff. The purpose of these facilities is to temporarily store the runoff so that it can be released at a controlled rate to nearby receiving waters or infiltrated into the ground. Retention/detention ponds are designed for new and redeveloped land to provide flow control that protects downstream systems from flooding and erosion.

The City owns 22 detention ponds, five retention ponds, and 20 underground vaults.

Infiltration Trenches

Some locations within the City contain soils that are suitable for stormwater infiltration, and as a result, several infiltration trenches have been constructed. The trenches are located underneath City streets and infiltrate locally generated stormwater runoff. Multiple infiltration trenches typically are located in each infiltration facility, along with water quality pretreatment and an overflow connection to local stormwater or combined piping systems. The stormwater drainage system contains both public and privately owned infiltration facilities. The City owns approximately 2.8 miles of infiltration trenches.

Oil/Water Separators

Oil/water separators are generally underground vaults designed to trap sediments, oil, and floatable materials. The inlet and outlet are typically located on opposite ends of the vault, which is also equipped with baffle walls extending above and below the water surface and with a gap above the floor of the vault. Runoff flows underneath the baffles and out of the vault, while the oil floats to the surface and is retained in the vault by the baffle. Some oil/water separators contain coalescing plates to increase the oil removal efficiency of the separator. The City owns 36 oil/water separator vaults.

Water Quality Treatment Filtration Systems

Water quality cartridge filtration systems are used throughout the City along various stormwater drainage lines. Cartridge filters provide water quality treatment by removing suspended solids (turbidity) and metals from stormwater. The City maintains 165 water quality filter cartridges, consisting Contech ZPG™ filters and Advanced Drainage Systems™ (ADS) Bay filters.

Outfalls

The stormwater drainage system discharges to receiving waters in the Woods Creek, French Creek, and Skykomish River watersheds. Outfall locations are shown in Figure SW 4-2.

Chapter 3 Land Use and Service Area

3.1 Service Area Description

The existing utility service area for the City can be described as comprising of two general areas, the City and Snohomish County. Aside from water associations or water districts, there are no other governmental jurisdictions in the service area.

Table 3-1 presents the service area of each of the three utilities and separates those service areas into portions within the corporate boundaries, outside the City Limits but within the Urban Growth Area (UGA) boundary and that portion that is outside the UGA boundaries. The 'total' acres shown are the ultimate service area.

Table 3-1
Utility Service Area

Area	Sanitary Sewer Utility (acres)	Water System Utility (acres)	Stormwater Utility (acres)
Within City Corporate Boundaries	4,104	4,104	4,104
Outside City Limits and within UGA	790	454	790
Outside UGA	0	13,968	0
Total Acreage	**4,894**	**18,526**	**4,894**

3.1.1 City of Monroe

The City's municipal boundaries comprise of 4,104 acres. All of the City's corporate area is within the service area of the utilities. All of the area served by the sanitary sewer utility is collected and treated by the City's Wastewater Treatment Plant (WWTP). Similarly, all of the City water customers are served with City water purchased from the City of Everett. The stormwater utility can be extended beyond the UGA, but currently no such extensions exist. The City both owns and maintains these portions of the system and is responsible for treatment, conveyance, distribution and storage.

3.1.2 Snohomish County

Portions of Snohomish County fall within the service areas of the utilities. Before providing sanitary sewer service to parcel outside the corporate boundaries, it is the City's policy to annex those parcels into the City. Water service is provided in Snohomish County. Stormwater service can be, but currently is not extended into Snohomish County.

3.2 Surrounding Vicinity Characteristics

The City boundaries and the service areas lie entirely within Snohomish County. However, the service areas for the three utilities are varied and differ significantly.

3.2.1 Topography

The geography of the City is dominated by the Skykomish Valley outwash plain. The Skykomish valley is oriented east to west and is generally flat, with an elevation ranging from 30 to 80 feet above sea level. Figure 3-1 shows the topography of the City area. The topography of the City ranges from flat and gently rolling to hilly, with a few steep slopes along the stream corridors.

The Skykomish River flows in a southwestern direction generally along the southern boundary of the City. A few miles southwest of the City, the Skykomish River merges with the Snoqualmie River to form the Snohomish River, which flows into Puget Sound between Everett and Marysville. Woods Creek flows into the Skykomish River through a narrow valley at the eastern end of the City.

The Rivmont Plateau, to the east of the City, is located between the Woods Creek valley and the Skykomish River valley and rises abruptly to elevations of 200 feet. The service area includes several hills sloping upwards from the Skykomish River valley to the north, with maximum elevations of approximately 420 feet. The Monroe Correctional Complex is located on a knoll with a maximum elevation of 140 feet in the southwestern portion of the service area. At the extreme southwestern corner of the service area is a hill with a maximum elevation of 320 feet.

3.2.2 Water Resources

The City's municipal water system provides service to the majority of the population within the City limits. Roosevelt Water Association serves approximately 400 customers near the northwestern City limits in a detached residential development (the Woodlands). The other residents outside the City limits are served by adjacent water purveyors as described in Chapter W 4 – Water System Description. A map of the water features in the utility service area is included as Figure 3-2.

Surface Water

The most dominant freshwater feature in the service area is Lake Tye which is located along the western border of the City Limits adjacent to the Fryelands Development. Lake Tye has a surface area of approximately 38 acres.

Woods Creek bisects the southeastern corner of the City which enters the Skykomish River at the State Route (SR) 203 bridge.

Groundwater

A study done in 1997 by the U.S. Geological Survey found that 94 percent of the groundwater in South Snohomish County was considered soft to moderately hard[1]. No appreciable widespread groundwater contamination was found at the time of the study. Concentrations of arsenic, iron, and manganese were the most widespread groundwater problems in the area. The population growth in Snohomish County has increased dramatically since the City's founding which has affected the quantity and the quality of groundwater. Most groundwater recharge in Snohomish County is from infiltration of precipitation, and impervious surfaces caused by increased development can limit infiltration. Consequently, less groundwater may be available as land development increases.

[1] US Geological Survey. (1997). *The Ground-Water System and Ground-Water Quality in Western Snohomish County, Washington.* Tacoma, Washington: USGS, Snohomish County and Washington State Department of Ecology. https://pubs.usgs.gov/wri/1996/4312/report.pdf

Note: The Sanitary Sewer and Stormwater Service Areas are within the City's UGA Boundary.

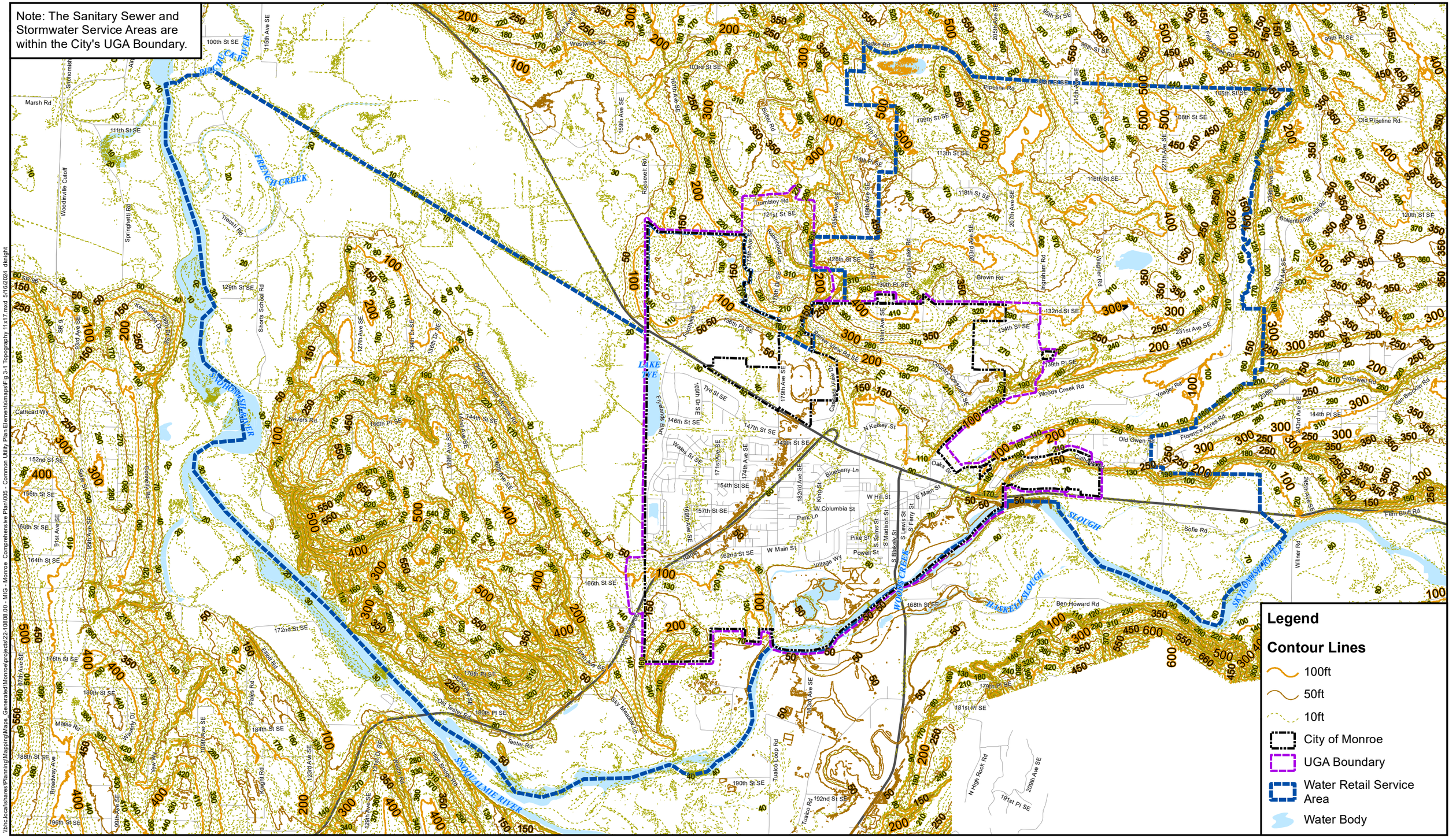

\\bhc.local\shares\Planning\Mapping\Maps Generated\Monroe\projects\22-10808.00 - MIG - Monroe Comprehensive Plan\005 - Common Utility Plan Elements\maps\Fig 3-1 Topography 11x17.mxd 5/16/2024 dknight

bhc CONSULTANTS

Contours extracted from a combination of LIDAR data. Source: Puget sound LIDAR 2014 Consortium, and contour data provided by the City of Monroe
Base Data: City of Monroe 2024
Data sources supplied may not reflect current or actual conditions. This map is a geographic representation based on information available. It does not represent survey data. No warranty is made concerning the accuracy, currency, or completeness of data depicted on this map.
BHC Consultants LLC., assumes no responsibility for the validity of any information presented herein, nor any responsibility for the use or misuse of the data.

N

0 0.5 1 1.5 Miles

MONROE WASHINGTON

Service Area Topography

Utility Systems Plan - Common Elements
City of Monroe, Washington
September 2024

Figure **3-1**

COPYRIGHT © 2024 BHC CONSULTANTS LLC., ALL RIGHTS RESERVED

THIS PAGE INTENTIONALLY BLANK.

Note: The Sanitary Sewer and Stormwater Service Areas are within the City's UGA Boundary.

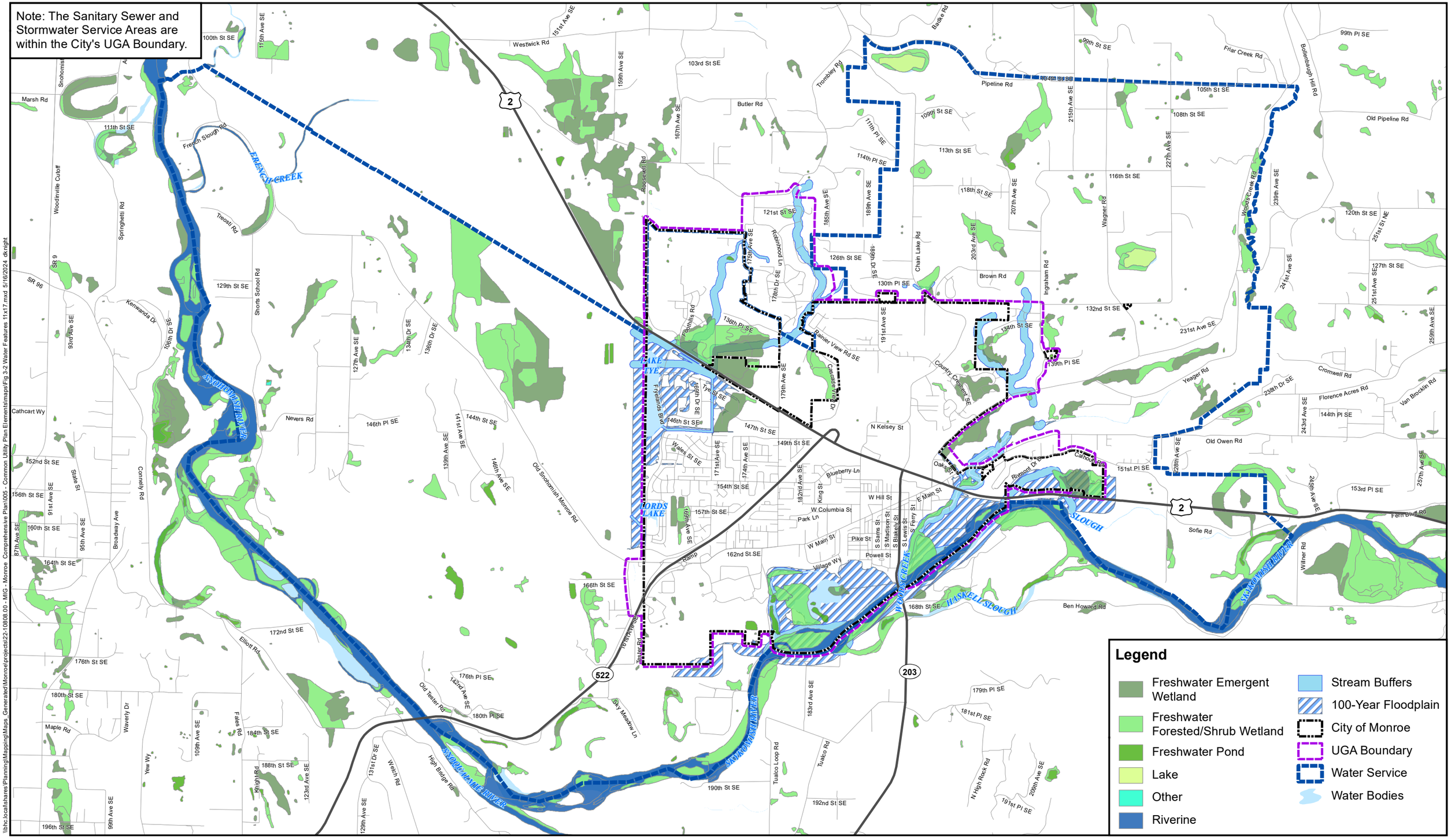

Legend

- Freshwater Emergent Wetland
- Freshwater Forested/Shrub Wetland
- Freshwater Pond
- Lake
- Other
- Riverine
- Stream Buffers
- 100-Year Floodplain
- City of Monroe
- UGA Boundary
- Water Service
- Water Bodies

Wetlands: National Wetlands Inventory 2009

Base Data: City of Monroe 2024

Data sources supplied may not reflect current or actual conditions. This map is a geographic representation based on information available. It does not represent survey data. No warranty is made concerning the accuracy, currency, or completeness of data depicted on this map.
BHC Consultants LLC., assumes no responsibility for the validity of any information presented herein, nor any responsibility for the use or misuse of the data.

N

0 0.5 1 1.5 Miles

Water Features

Utility Systems Plan - Common Elements
City of Monroe, Washington
September 2024

Figure **3-2**

COPYRIGHT © 2024 BHC CONSULTANTS LLC., ALL RIGHTS RESERVED

\\bhc.local\shares\Planning\Mapping\Maps_Generated\Monroe\projects\22-10808.00 - MIG - Monroe Comprehensive Plan\005 - Common Utility Plan Elements\maps\Fig 3-2 Water Features 11x17.mxd 5/16/2024 dknight

THIS PAGE INTENTIONALLY BLANK.

3.2.3 Soil and Geology

The City, located within the Skykomish River Valley, is part of the Puget Lowlands. These lowlands are characterized by hilly glacial drift plains, featuring small ridges and rounded hills formed through glaciations. The primary soil type in central Monroe is an alluvial soil, with upper layers of silt loams and silty clay loams, with underlying very fine sandy loam or sand. The soil has moderately low permeability and during the winter has a high groundwater table (2 to 4 feet below grade). The City also has areas of higher permeability however, and utilizes stormwater infiltration facilities in these areas for stormwater control. The western portion of the service area also contains a few areas with other types of alluvial soils, including some that are poorly drained. The hills north of the City limits consist of glacial till. Glacial till includes large rocks and pockets or streaks of sand and gravel. The upper layers of soils are typically gravelly loam, underlain by hardpan or glacial till. Permeability through the hardpan is very slow, and a perched water table may occur during heavy rains in some areas.

The United States Department of Agriculture (USDA) Natural Resources Conservation Service (NRCS) Soil Survey has mapped and analyzed the soils in the area as shown in Figure 3-3. The most common soil type in the area is the Alderwood series, which includes moderately well-drained gravelly sandy loams that are 24 to 40 inches deep over consolidated glacial till. This soil type covers a small percentage of the district. The next most common type is Everett soils, which are gravelly and are underlain by sand and gravel. Other notable soil types in the Monroe District include Bellingham silty clay loam, Mukilteo muck, Pilchuck loamy sand, Puget silty clay loam, and Sultan silt loam, among others. In certain areas, particularly basins and lowlands, organic materials such as peat and muck occur in depths up to 10 feet. Drainage within the City occurs across three sub-basins of the Snohomish River drainage basin: French Creek, Woods Creek, and Lower Skykomish River. This drainage system influences the distribution of various soil types and the overall hydrology of the area.

Soil factors in the Skykomish River valley that may affect planning are the potential for flooding or poor drainage, especially in the western portion of the service area. Soil factors on the hills surrounding the valley that may affect planning include steep slopes and erosion/landslide potential. In addition, areas with glacial till have low permeability and some areas may not be suitable for septic tank drain fields.

THIS PAGE INTENTIONALLY BLANK.

Note: The Sanitary Sewer and Stormwater Service Areas are within the City's UGA Boundary.

Soil Type	Description
Ev(p)	volcanic rocks, Mount Persis, volcanic rocks of
Jigb(w)	gabbro, western melange belt, rocks of the
KJmm(wa)	marine metasedimentary rocks, western melange belt, argillite and graywacke of the
KJmm(wk)	marine metasedimentary rocks, western melange belt, K-feldspar sandstone of the
Oen	nearshore sedimentary rocks,
Qa	alluvium
Qc	continental sedimentary deposits or rocks
Qga, Qga(t)	advance continental glacial outwash, Fraser-age
Qgo	continental glacial outwash, Fraser-age
Qgpc	continental glacial drift, pre-Fraser, and nonglacial deposits
Qgt	continental glacial till, Fraser-age
Qgu	glacial drift, undivided
Qls	mass-wasting deposits, mostly landslides
Qls(m)	mass-wasting deposits, other than landslides
Qp	peat deposits

Soils: WA DNR 2005

Base Data: City of Monroe 2024

Data sources supplied may not reflect current or actual conditions. This map is a geographic representation based on information available. It does not represent survey data. No warranty is made concerning the accuracy, currency, or completeness of data depicted on this map. BHC Consultants LLC., assumes no responsibility for the validity of any information presented herein, nor any responsibility for the use or misuse of the data.

N

0 0.5 1 1.5 Miles

Service Area Soils

Utility Systems Plan - Common Elements
City of Monroe, Washington
September 2024

Figure **3-3**

COPYRIGHT © 2024 BHC CONSULTANTS LLC., ALL RIGHTS RESERVED

\\bhc.local\shares\Planning\Mapping\Maps_Generated\Monroe\projects\22-10808.00 - MIG - Monroe Comprehensive Plan\005 - Common Utility Plan Elements\maps\Fig 3-3 Soils 11x17 RJ.mxd 5/16/2024 dknight

THIS PAGE INTENTIONALLY BLANK.

3.3 Land Use

3.3.1 Growth Management Act

The State of Washington adopted the Growth Management Act (GMA) with the intent of concentrating most new development and population gains within urban areas of the more populous and rapidly growing counties. These counties are required to define an urban growth boundary within which urban services like sewers are provided, and any new parcels created outside that boundary must be low density with sufficient acreage to support onsite sewage disposal systems conforming to Washington State Department of Health (DOH) regulations.

The entire sanitary sewer service area is within the GMA boundaries of the City for urban development. Extending sewers beyond the GMA boundaries for essential governmental facilities and documented health hazard areas has not arisen.

Zoning within the City Limits area can be classified as commercial, industrial, low-intensity residential, multi-family residential, and undeveloped lands such as public right of ways, parks, and open space, inventoried below in Table 3-2 and mapped in Figure 3-4. Since this Plan was updated concurrently with both the City and Snohomish County Comprehensive Plans, the zones shown in Figure 3-4 reflect the current adopted zoning designations rather than the updated Future Land Use Designations. However, as of the date of this Plan's update, the proposed changes do not include significant alterations that would substantially change those existing – listed below in Table 3-2 and shown on the map in Figure 3-4 – and change any calculations in this Plan.

Table 3-2
Land Uses and Zones in the Retail Service Area

Retail Service Area Land Use/ Zone Category[1]	Relevant Zones[2]	
	City of Monroe MMC 22.14	**Snohomish County[3] SCC 20.21**
Rural Residential	N/A	▪ Rural 5-Acre. ▪ Residential 20,000 sq. ft. (R-20,000).
Low-Intensity Residential	▪ Single-Family Residential-4 Units per Acre (R4). ▪ Single-Family Residential-7 Units per Acre (R7). ▪ Single-Family Residential-15 Units per Acre (R15).	▪ Residential 7,200 sq. ft. (R-7,200). ▪ Residential 8,400 sq. ft. (R-8,400). ▪ Residential 9,600 sq. ft. (R-9,600).
Multifamily Residential	▪ Multifamily Residential-25 Units per acre (R25).	▪ Low Density Multiple Residential (LDMR).
Commercial	▪ Downtown Commercial (DC). ▪ General Commercial (GC). ▪ Tourist Commercial (TC).	▪ General Commercial (GC). ▪ Rural Business (RB). ▪ Neighborhood Business.
Mixed Use	▪ Mixed Use-General (MG). ▪ Mixed Use-Medical (MM). ▪ Mixed Use-Neighborhood (MN).	N/A
Industrial	▪ General Industrial (GI). ▪ Industrial Transition (IT). ▪ Shoreline Industrial (SI). ▪ Light Industrial (LI).	N/A
Parks and Open Space	▪ Parks (P). ▪ Limited Open Space (LS).	N/A
Public Facilities / Institutional	▪ Institutional (IN). ▪ Transportation (TR).	N/A
Commercial Natural Resource Lands	N/A	▪ Agriculture-10 Acre (A-10). ▪ Forestry (F). ▪ Rural Conservation (RC). ▪ Rural Use (RU).

Notes:
1) The Retail Service Area extends beyond multiple county and City boundaries. Land use categories were normalized to show the general uses across City and County Land Use and Zoning Designations to provide a high-level overview of land uses across these boundaries.
2) At the time of this Plan's update, the City and County had not adopted their updated, 2024 Comprehensive Plans, which includes updated Future Land Use Maps. Zones were used.
3) For Snohomish County, only the zones within the Retail Service Area were reclassified in this list.

P:\MappingMaps_Generated\Monroe\projects\22-10808.00 - MIG - Monroe Comprehensive Plan\005 - Common Utility Plan Elements\maps\LandUseZoning\LandUseZoning.aprx 8/2/2024 rjones

Legend

- Retail Service Area
- City Boundary
- UGA Boundary
- Water Body

Use Category

- Rural Residential
- Low-Intensity Residential
- Multifamily Residential
- Mixed Use
- Industrial
- Commercial
- Commercial Natural Resource Lands
- Parks and Open Space
- Public Facilities/ Institutional

Stormwater System: City of Monroe 2024

Snohomish County base data 2024
Data sources supplied may not reflect current or actual conditions. This map is a geographic representation based on information available. It does not represent survey data. No warranty is made concerning the accuracy, currency, or completeness of data depicted on this map.
BHC Consultants LLC., assumes no responsibility for the validity of any information presented herein, nor any responsibility for the use or misuse of the data.

N

0 0.25 0.5 1 Miles

Land Use and Zoning

Utility Systems Plan - Common Elements
City of Monroe, Washington
September 2024

Figure **3-4**

COPYRIGHT © 2024 BHC CONSULTANTS LLC., ALL RIGHTS RESERVED

THIS PAGE INTENTIONALLY BLANK.

3.3.2 City Extension Policies

The City's policy for services recognizes that its function is not to plan land uses for the service area but to respond to land uses planned by the land use planning agencies.

The public utility systems in the City may be extended by one of two methods, one being a developer extension agreement, where a developer, property owner or a group of property owners request and construct a water or sewer extension under the terms and conditions of a developer extension agreement. The second method is a Local Improvement District (LID) process following the Revised Code of Washington (RCW) 35.43.040 and 35.43.042, where a group of property owners petition the City to extend utilities to their area and then are assessed for the improvements.

It is the City's policy that the property owners desiring utility service initiate a request for service. After entering a Developer's Extension Agreement with the City, the proposed design will be reviewed by the City to ensure compliance with the standards and design criteria. All utility extensions shall follow the current version of the City's design and construction standards and as defined in the City's Municipal Code. Once the improvements have been constructed and confirmed through the City inspection to meet established standards, then extensions are deeded to the City.

The City Council has the authority to set policies, ordinances, and zoning. The City may find it necessary from time to time to reevaluate their policies based on Snohomish County land use, policies and ordinances.

3.4 Relationships with Adjacent Agencies

The issue of managing and coordinating which agency provides services can be an emotionally charged matter. Consequently, adjudicating such issues typically falls to a county-supported Review Board.

In the City's case, there are no adjacent agencies that can provide sanitary sewer service. The nearest provider is the City of Sultan. Neither the City nor the City of Sultan extends sewer service beyond their GMA boundaries and consequently, there are no overlapping issues with neighboring agencies.

Stormwater utilities are typically provided by municipalities. Like the sanitary sewer service, the nearest stormwater utility is in the City of Sultan. Stormwater, even more than sanitary sewer service, is dictated by the topography. No adjacent municipalities have stormwater utilities that reach to the service area of the City.

Providing water service, however, is complicated by the fact that GMA limitations do not apply and the fact that there are several water districts or associations adjacent to the City's water service boundary. These water purveyors are presented on Figure W 4-4.

The adjacent water purveyors are listed below:

- Cross Valley Water District.
- City of Snohomish.
- Roosevelt Water Association.
- Meadow Lake Water Association.

- Snohomish County Public Utility District No. 1 (SnoPUD) Integrated 2.
- SnoPUD Integrated 3.
- Highland Water District.

3.5 Service Areas

3.5.1 Sanitary Sewer

Figure SS 4-2 shows the extent of the existing sanitary sewer system. This figure also shows the current UGA. The UGA boundary establishes the line beyond which sanitary sewers cannot be extended.

The general policy that governs UGA is that urban type services are not to be extended beyond those limits. However, in certain circumstances this limitation can be modified, and sewer service can be provided. In the case of documented Health Hazard areas or critical/essential governmental facilities, sewers can be provided beyond the UGA boundary.

3.5.2 Water

Figure W 4-1 shows the extent of the current water system. The water utility does not fall under the same UGA limitations as applied to the sanitary sewer system and consequently, the water utility reaches far beyond the UGA boundaries. This figure also shows the surrounding water purveyors in relation to the City's water service boundaries.

3.5.3 Stormwater

Within the corporate City limits, there are three main drainages. These three include the Woods Creek, Skykomish River, and French Creek. The extent of these drainages reaches far beyond any corporate boundaries or UGA boundaries. Figure SW 4-1 shows some or all of the catchment area of these drainage basins.

APPENDICES

THIS PAGE INTENTIONALLY BLANK

Appendix CE-A

City of Monroe Public Works Design, Construction and Operation Standards

THIS PAGE INTENTIONALLY BLANK

City of Monroe

Design, Construction and Operations Standards



February 2024

City of Monroe Public Works
Design, Construction and Operations Standards

Prepared by the
Monroe Public Works Department

Jakeh Roberts
Public Works Director

Scott Peterson, PE
City Engineer

City Officials

Mayor
Geoffrey Thomas

Council Members

Jason Gamble	Kevin Hanford
Jason Walker	Kirk Scarboro
Heather Fulcher	Kyle Fischer
Tami Beaumont	

CITY OF MONROE
806 WEST MAIN STREET
MONROE, WA 98272
(360) 794-7400

February 2024

CITY OF MONROE PUBLIC WORKS
DESIGN, CONSTRUCTION AND OPERATIONS STANDARDS

SECTION 1
GENERAL CONSIDERATIONS

TABLE OF CONTENTS

1.1 AUTHORITY 1

1.2 PURPOSE 1

1.3 APPLICABILITY 1

1.4 ADMINISTRATIVE INTERPRETATIONS AND REVISIONS 1

1.5 DEVIATION FROM STANDARDS 1

1.6 REFERENCES 2

1.7 DEFINITIONS 3

1.8 LEGAL RELATIONS AND RESPONSIBILITIES 10

1.9 SUBMITTAL 11

1.9.1 PERMITS 11
1.9.2 PROFESSIONAL QUALIFICATIONS 11
1.9.3 PLAN REVIEW 11
1.9.4 FINANCIAL SECURITIES 11
1.9.5 RECORD DRAWINGS 12

1.10 CONSTRUCTION 12

1.10.1 PRECONSTRUCTION CONFERENCE 12
1.10.2 INSPECTION 12
1.10.3 CONSTRUCTION NOISE 13
1.10.4 EROSION AND WATER QUALITY CONTROL 13
1.10.5 RIGHT-OF-WAY AND SITE MAINTENANCE 14
1.10.6 PROTECTION OF PROPERTY AND UTILITIES 14

1.11 UNDERGROUND UTILITIES 15

1.11.1 GENERAL 15
1.11.2 REQUIREMENTS TO UNDERGROUND UTILITIES ASSOCIATED WITH DEVELOPMENTS 15
1.11.3 TRENCH EXCAVATION 15
1.11.4 TRENCH BACKFILL 17
1.11.5 COMPACTION 17
1.11.6 TRENCHING LONGITUDINAL TO ROADWAY 17
1.11.7 TRENCHING TRANSVERSE TO ROADWAY 18
1.11.8 JACKING, BORING, OR TUNNELING 18
1.11.9 SEEPAGE BARRIERS 19

1.12 TRAFFIC CONTROL 19

1.12.1 GENERAL 19
1.12.2 DETOURS AND ROAD CLOSURES 20
1.13 ERRORS AND OMISSIONS 20
1.14 PENALTIES 20
1.15 STANDARD GENERAL DRAWINGS 21

CITY OF MONROE PUBLIC WORKS
DESIGN,CONSTRUCTION AND OPERATIONS STANDARDS

SECTION 1
GENERAL CONSIDERATIONS

1.1 AUTHORITY

Monroe Municipal Code (MMC) Chapter 23.10.030 authorizes the Public Works Director to prepare design, construction, and operations standards and specifications for utility work, work in public rights-of-way or in easements, landscaping, and other private or public work performed within the Monroe City Limits or utility service area.

1.2 PURPOSE

The purpose of these Design, Construction and Operations Standards (herein referred to as Standards) is to ensure that all development activity in the City of Monroe meet appropriate standards for safety, construction, maintenance, and water quality. These standards accomplish the following:

- Provide clear and consistent design standards for development.
- Implement and administer the development regulations contained in the Monroe Municipal Code and Comprehensive Plan.
- Ensure that development activity in the City of Monroe complies with all applicable laws, regulations, and standards of good engineering practice.

1.3 APPLICABILITY

These Standards, shall apply when public or private work is performed within the Monroe City Limits or the City of Monroe utility service area. This includes work performed by private parties at their own expense under authority granted by ordinance of the city council or permit process. When these Standards do not provide guidance the design, construction and materials shall conform to the current edition of the applicable reference(s) found in Section 1.6.

1.4 ADMINISTRATIVE INTERPRETATIONS AND REVISIONS

It is recognized that administrative interpretation of these Standards will be required from time to time. Such interpretations are refinements or explanations of meaning or intent issued by the Director. Requests for administrative interpretations must be submitted in writing to the Director. The Director is authorized to revise these Standards in accordance with MMC 23.10.030, and sound engineering practices. Such revisions will be issued as necessary to keep the document current. Suggestions for future revisions may be submitted in writing to the Director.

1.5 DEVIATION FROM STANDARDS

These Standards represent appropriate practice under most conditions, based on past experience in the City of Monroe and other jurisdictions. They are intended to provide facilities that are safe and appropriate for use in the City of Monroe.

Engineering design is an endeavor that examines alternative solutions to real world situations. These standards are not intended to limit the introduction of new ideas. Situations will arise where alternatives to these Standards may better accommodate

existing conditions, overcome adverse topography, or allow for more cost-effective solutions without adversely affecting safety, operations, maintenance, or aesthetics.

Accordingly, requests for deviations from these Standards will be considered by the Director. Such requests must be submitted, in writing, to include supporting information demonstrating compliance with the following criteria:

A. The deviation will achieve the intended result with a comparable or superior design and quality of improvement; and
B. The deviation will not adversely affect safety or operations; and
C. The deviation will not adversely affect maintenance and its associated cost; and
D. The deviation will not adversely affect the aesthetic appearance; and
E. The deviation will not impact future expansion, development, or redevelopment.

It is recognized that the need for and timing of a deviation request may not be predictable. Requests should be submitted as soon as the need becomes known. No deviation request will be considered until an application for a permit or other approval has been submitted. Known requests that affect lot yield or scope of development must be decided prior to any public hearing or official decision on the application. This is necessary for public notice and participation in the decision process. Deviations that affect engineering design, to the extent they are known, must be decided prior to submittal of construction plans. This will prevent wasted effort in the preparation of plans with nonstandard features that cannot be approved.

The Director is the final authority on all deviation requests. The Director reserves the right to direct or deny a deviation from these Standards at any time in the interest of public health, safety, and welfare.

1.6 REFERENCES

These Standards were developed using the currently adopted provisions of the following publications:

A. Monroe Municipal Code
B. DOE Stormwater Management Manual for Western Washington
C. DOE Criteria for Sewage Works Design
D. State of Washington Shoreline Management Act
E. State and National Environmental Policy Acts
F. International Building Code
G. International Residential Code
H. National Electrical Code
I. Uniform Plumbing Code
J. International Mechanical Code
K. WSDOT/APWA Standard Specifications for Road, Bridge and Municipal Construction
L. WSDOT/APWA Standard Plans for Road, Bridge and Municipal Construction
M. WSDOT Design Manual
N. WSDOT Traffic Manual
O. WSDOT Utilities Manual
P. WSDOT Construction Manual
Q. AWWA Standards

R. Manual on Uniform Traffic Control Devices (MUTCD)
S. Highway Capacity Manual
T. American Association of State Highway And Transportation Officials (AASHTO) Policy on Geometric Design of Highways and Streets
U. AASHTO Guide for the Development of Bicycle Facilities
V. Institue of Traffic engineers (ITE) Trip Generation and Design Manual
W. Illuminating Engineering Society (IES) Design Manual
X. Americans with Disabilities Act (ADA), Accessibility Guidelines for Buildings and Facilities (ADAAG)
Y. Americans with Disabilities Act (ADA), Pedestrian Right-Of-Way Accessiblity Guidelines (PROWAG)
Z. Washington state Department of Health Water System Design Manual

1.7 DEFINITIONS

For the purpose of these Standards, the terms, phrases, words, and their derivations have the following definitions. When not inconsistent with the context, words used in the present tense include the future tense and words in the plural form include the singular form. The word "must" is mandatory. The word "may" is permissive. Definitions from the MMC also apply to these Standards. The Public Works Director has the authority to interpret definitions.

Appurtenances
Machinery, appliances, or auxiliary structures attached to main structure, but not considered integral for purpose of enabling it to function.

APWA ("American Public Works Association")
Professional association of public works agencies, private companies, and individuals dedicated to professional excellence and public awareness through education and advocacy.

Arterial
Road or street primarily for through traffic, such as roads or streets that are considered collectors. This does not include local access roads limited to access for neighboring properties.

Auxiliary Supply
Water source or system, other than the City's water system, that may be available in a building or premises.

Backflow
Flow in direction other than its intended direction, of water, gas, or substances into the distribution system of a public utility system. Back pressure means backflow caused by pump, elevated tank, boiler, or other means that could create pressure within system greater than City's supply system pressure. Back siphonage is a form of backflow due to negative or sub-atmospheric pressure within a utility system.

Backflow Prevention Assembly
Assembly approved by Washington State to protect against cross-connection.

BMP ("Best Management Practice")
Schedule of activities, prohibition of practices, procedure, or structural or managerial practice approved by the City, Ecology, or another governing body, that prevents or reduces the release of pollutants and other adverse impacts to the environment.

Bike Lane
A portion of a roadway which has been designated by striping, signing, and pavement markings for the preferential or exclusive use of bicycles.

Bioswale
Long, gently sloped, vegetated ditch designed to remove pollutants from stormwater.

Bioretention
Stormwater best management practice consisting of shallow landscaped depression designed to temporarily store and promote infiltration of stormwater runoff. Standards for bio-retention design are specified in the Department of Ecology's Stormwater management Manual for western Washington.

Bollard
Post used to prevent vehicular access. A bollard may or may not be removable.

Buffer Zone
Area contiguous to a critical area required for the continued maintenance, functioning, or structural stability of a critical area.

BSBL ("Building Setback Line")
Line measured parallel to property, easement, drainage facility, or buffer boundary that delineates the area (defined by the distance of separation) where buildings or other structures are prohibited. Wooden or chain link fences and landscaping are allowable within a building setback line.

Certified Erosion and Sediment Control Lead (CESCL)
Individual with erosion and sediment control training that meets minimum standards established by Ecology. A CESCL is knowledgeable in practices of erosion and sediment control and must have the skills to assess site conditions and construction activities that could impact the quality of stormwater and the effectiveness of erosion and sediment control measures used to control the quality of stormwater discharges. Certification is obtained through an Ecology approved erosion and sediment control course.

Civil Engineer
Person licensed by the State of Washington as a professional engineer in civil engineering.

Clearing
Removal of existing vegetation.

Commercial Project (or land use)
Project or land use requiring commercial building permit, or site where permit would be required for construction of a building, including industrial projects or land uses and mixed-use, commercial, or multifamily projects or land uses. Agricultural projects included only if they require commercial building permit. Single-family residential projects not included.

Community Development Director
Community Development Director or their designee.

Conveyance System
Drainage facilities and features, both natural and constructed, that provide for collection and transport of surface water or stormwater runoff. Natural elements of conveyance

system include swales and small drainage courses, streams, rivers, lakes and wetlands. Constructed elements of conveyance system include gutters, ditches, pipes, catch basins, channels and most flow control and water quality facilities.

Critical Area
Any of the following areas or ecosystems: aquifer recharge areas, fish and wildlife habitat conservation areas, frequently flooded areas, geologically hazardous areas, streams, and wetlands, as defined in MMC 22.80.

Critical Area Report
Report evaluating probable impacts of development proposal on critical areas regulated under MMC 22.80.

Culvert
Pipe or concrete box structure that drains open channel, swale, or ditch under roadway or embankment, typically with no catch basins or maintenance holes along its length.

Cut Slope
Slope formed by excavating overlying material to connect the original ground surface with a lower ground surface created by the excavation.

Dedication of Land
Assigning ownership for a portion of a property for a specific use or function.

Design Engineer
Professional engineer who prepares analysis, design, and plans for Development permit or approval submittal.

Detention
Release of surface and stormwater runoff from site at slower rate than collected by drainage facility system, with the difference being held in temporary storage.

Detention Facility
Facility that collects water from developed areas and releases it at slower rate than it enters. Excess of inflow over outflow is temporarily stored in pond or vault and is typically released over hours or days.

Developer
Property owner, public agency, public or private utility, person, contractor, or entity named in writing by property owner on an application for a development, permit, or approval to act as applicant.

Development
Activity upon land consisting of construction or alteration of structures, earth movement, dredging, dumping, grading, filling, mining, removal of sand, gravel, or minerals, driving of piles, drilling operations, bulk heading, clearing of vegetation, activities associated with construction of structures or infrastructure, or other land disturbance or building activities. Includes storage or use of equipment or materials inconsistent with existing use. Also includes approvals issued by City binding land to specific patterns of use, including but not limited to subdivisions, zone changes, conditional use permits, and binding site plans.

Development Review Engineer
Responsible for conditioning, review, inspection, and approval of right-of-way use permits and road and drainage improvements constructed as part of development

permits administered by the City.

Development Services
Interdisciplinary project and permit review team consisting of staff from the Community Development, Fire, and Public Works Departments.

Director
The Public Works Director of the City of Monroe or their designee.

Ditch
Constructed channel to collect and convey stormwater.

Drainage Facility
Constructed or engineered feature that collects, conveys, stores, treats, or otherwise manages stormwater runoff or surface water. Includes, but is not limited to, constructed or engineered stream, lake, wetland, or closed depression, or a pipe, channel, ditch, gutter, flow control facility, flow control BMP, water quality facility, erosion and sediment control facility, and any other structure and appurtenance that provides for drainage.

Easement
Legal right to use parcel of land for particular purpose. Does not include fee ownership, but may restrict owner's use of the land.

Ecology
The Washington State Department of Ecology.

Embankment
Structure of earth, gravel, or other material raised to form pond bank or foundation for road.

Energy Dissipater
Means by which total energy of flowing water is reduced. Usually mechanism that reduces velocity prior to or at discharge from an outfall in order to prevent erosion. Includes rock splash pads, drop maintenance holes, concrete stilling basins or baffles, and check dams.

Erosion
Process whereby wind, rain, water, and other natural agents mobilize and transport particles.

Erosion Hazard Area
Areas as defined in MMC 22.80 or as identified by Department of Agriculture National Resources Conservation Service as having "moderate to severe," "severe" or "very severe" rill and inter-rill erosion hazard or those areas containing soils which, according to the USDA Soil Conservation Service Soil Classification System, may experience severe to very severe erosion hazard.

Existing Conditions
Conditions of access, utilities, development, vegetation, and impervious cover at time of analysis.

Fill Slope
Slope formed by placing and compacting material to create a slope and surface that is higher than the original ground surface.

Fire Marshall
Fire Marshall or their designee.

Franchise Area
Area defined within individual franchise agreement entered into by City and another party for specified purpose, generally including street rights-of-way.

Geotechnical Engineer
Civil engineer, licensed by the Washington State, with at least four years of professional employment as a geotechnical engineer specializing in the design and construction aspects of earth materials.

Grading
Shaping, excavating, or filling of ground surface.

Groundwater
Water in a saturated zone or stratum beneath the surface of land or a surface water body.

Illicit Discharge
Non-stormwater discharge to stormwater drainage system causing or contributing to violation of state water quality, sediment quality, or ground water quality standards, including but not limited to sanitary sewer connections, industrial process water, interior floor drains, car washing, and gray water systems.

Improvement
Permanent, man-made, physical change to land or real property including, but not limited to, buildings, streets, driveways, sidewalks, crosswalks, parking lots, water mains, sanitary and storm sewers, drainage facilities, and landscaping.

Infrastructure
Basic public installations such as roads, transportation systems, parks, and utilities.

Land Disturbing Activity
Activity that results in a change in existing soil cover (vegetative, non-vegetative, or existing soil topography) to include demolition, construction, clearing, grading, filling, excavation, and compaction. Does not include tilling conducted as part of agricultural practices, landscape maintenance, or gardening.

Land Surveyor
Person licensed by the State of Washington as a professional land surveyor.

Low Impact Development (LID)
Stormwater and land use management strategies that strives to mimic pre-disturbance hydrologic processes of infiltration, filtration, storage, evaporation and transpiration by emphasizing conservation, use of on-site natural features, site planning, and distributed stormwater management practices integrated into project design.

LID Principles
Land use management strategies that emphasize conservation, use of on-site natural features, and site planning to minimize impervious surfaces, native vegetation loss, and stormwater runoff.

Maintenance
Usual activities taken to prevent decline, lapse, or cessation in use of currently

serviceable structures, facilities, BMPs, equipment, or systems if there is no expansion of any of these, and there are no significant construction impacts. Maintenance includes repair or replacement of non-functional facilities and BMPs, and the replacement of existing structures with different types of structures, if the repair or replacement is required to meet current engineering standards or is required by one or more environmental permits and functioning characteristics of original facility or structure are not changed.

Multifamily Project or Land Use
Project or land use requiring commercial building permit or commercial site development permit for development of residential dwelling units, not detached single family or duplex dwelling units.

National Pollutant Discharge Elimination System (NPDES)
Part of Clean Water Act which requires point source discharges to obtain permits administered by Ecology, and referred to as NPDES Phase I or Phase II Permit.

Outfall
Point where collected and concentrated surface and stormwater runoff is discharged from a pipe system or culvert.

Owner
Individual(s) or entity having legal title to land or other real property.

Permeable Pavement
Pervious concrete, porous asphalt, permeable pavers or other forms of pervious or porous paving material intended to allow passage of water through pavement section. Often includes aggregate base providing structural support and acting as stormwater reservoir.

Pervious Surface
Surface material that allows stormwater to infiltrate into ground. Examples include lawn, landscape, pasture, and native vegetation areas. Note for purposes of threshold determination and runoff volume modeling for detention and treatment, vegetated roofs and permeable pavements are to be considered impervious surfaces along with lawns, landscaping, sports fields, golf courses, and other areas that have modified runoff characteristics resulting from the addition of underdrains.

Pipe System
A network of stormwater pipes, catch basins, maintenance holes, inlets, and outfalls designed and constructed to convey surface water.

Plat
Map or representation of subdivision showing division of tract or parcel of land into lots, blocks, streets, or other divisions and dedications, as defined in MMC 22.12.

Preapplication
Form and/or meeting used by Developer for development permit to present initial project intentions to Development Services. Preapplication is not the same as application.

Project
Proposed action to alter, develop, or redevelop a site or building that may also require permitting and engineering review.

Project Area
Portion of site and offsite areas subject to proposed project activities, alterations, and improvements, as defined in MMC 22.12.160.

PSE
Puget Sound Energy.

Public Works Director
Public Works Director or their designee.

PUD
Snohomish County Public Utility District No. 1

Receiving Bodies of Water
Creeks, streams, rivers, lakes, and other bodies of water into which surface waters are directed, either naturally or in manmade ditches or piped systems.

Record Drawings ("As-builts")
Engineering plans that have been revised to reflect changes to plans that occurred during construction.

Residential Access Street
Neighborhood or local access street.

Riprap
Facing layer or protective mound of stones placed to prevent erosion or sloughing of a structure, construction entrance, or embankment due to the flow of surface and stormwater runoff.

Sediment
Fragmented material which originates from weathering and erosion of rocks or unconsolidated deposits, and which is transported by, suspended in, or deposited by water.

Shared Use Path
A path or way which is physically separated from motorized vehicular traffic by an open space or barrier and is either within the road right-of-way or within an independent right-of-way. Shared use paths may be used by pedestrians, bicycles, skaters, joggers, wheelchair users and other non-motorized users.

Short Subdivision / Short Plat
Division of land into nine or less lots, tracts, parcels, sites, or subdivisions for purpose of sale, lease, development, or financing, as defined in MMC 22.12.190.

Sidewalk section
Portion of driveway approach lying between back edge of the sidewalk and apron, including end slopes, measured at front edge of sidewalk.

Sight Triangle
Unobstructed line of sight along both approaches of both roads at an intersection, at driveawys, and across included corners for distance sufficient to allow the operators of both vehicles, approaching simultaneously, to see each other in time to prevent a collision.

Slope
Gradient in a ratio of horizontal feet per vertical feet, or expressed as percentage. Side

slopes ratios of drainage facilities are referred to with the horizontal dimension first.

Snohomish PUD
Snohomish County Public Utility District No. 1.

Storm Drain
Enclosed conduits that transport surface and stormwater runoff toward points of discharge (sometimes called storm sewers).

Storm Drain System
System of gutters, pipes, streams, or ditches used to carry surface and stormwater from surrounding lands to streams, lakes, or Puget Sound.

Stormwater
Water produced during precipitation or snowmelt, which runs off, soaks into ground, or dissipates through evapotranspiration.

Stormwater Runoff
Stormwater that flows over or below the surface. Stormwater runoff contributes to and becomes surface water or groundwater.

Surface Water
Water existing on land surfaces before, during, and after stormwater runoff such as water found on ground surfaces and in drainage facilities, rivers, streams, springs, seeps, ponds, lakes, wetlands, and Puget Sound. It also includes shallow groundwater.

Swale
Shallow drainage conveyance with relatively gentle side slopes, generally with designed flow depths less than 1-foot.

Temporary Erosion and Sediment Control (TESC) Measures
Erosion and sediment control measures implemented before final stabilization of site to reduce erosion, control siltation and sedimentation, and prevent discharge of sediment-laden water from site.

Tract
Legally created parcel of property designated for special non-residential and non-commercial uses.

WSDOT
Washington State Department of Transportation.

Zero-Rise Floodway
A calculated upward rise in the base flood elevation, equal to or greater than 0.01 foot, resulting from a comparison of existing conditions and changed conditions directly attributable to alterations of the topography or any other flow obstructions in the floodplain. "Zero-rise floodway" is broader than that of the FEMA floodway but always includes the FEMA floodway.

1.8 LEGAL RELATIONS AND RESPONSIBILITIES

The contractor at all times shall comply with all federal and state laws, local laws and ordinances, and any regulations which in any manner affect the project.

The developer and contractor shall release, indemnify and promise to defend and hold

harmless the city, its officers, employees and agents from and against any and all liability, loss, damage, expense, actions and claims, including costs and reasonable attorneys fees incurred by the city in defense thereof, asserting or arising directly or indirectly on account of any violation of laws, ordinances or regulations whether such violations are by the contractor, his subcontractors, his employees, or his agents.

1.9 SUBMITTAL

1.9.1 Permits

Permits, approvals or agreements may be required by the City or other jurisdictions prior to initiating any activities subject to these Standards. Questions regarding such permits, approvals or agreements should be directed to the Director.

1.9.2 Professional Qualifications

Professionals in the fields of engineering, architecture, landscape architecture, or surveying who prepare or are responsible for the preparation of plans, drawings, specifications, calculations, technical reports, etc., for the purpose of obtaining City permits or approvals, shall be registered or authorized to practice in the State of Washington in accordance with Title 18 RCW. Registration or authorization to practice shall be in the specific technical area pertinent to the documents being prepared. Exceptions to this requirement are specified in Section 18.43.130 RCW.

1.9.3 Plan Review

For developer-constructed projects, all plans, reports, drawings and specifications that support permit or land use applications are to be submitted in PDF format to the Community Development Department. Copies of such supporting documentation are forwarded to the appropriate city staff for review. Construction drawings are to accurately display existing site information as well as detailed information on all proposed work. See MMC 212.68.040(C) for typical construction drawing submittal requirements and the relative sections of these Standards.

1.9.4 Financial Securities

Performance Financial Securities

Before any permit is issued, the Applicant must pay the appropriate permit fees. Work within existing city rights-of-way or easements shall provide financial security prior to issuance of a permit for that work as outlined in MMC 12.36.140 – Right-of-Way Disturbance Permits, performance deposits and warranty guarantee. For final plat and final short plat approvals, financial guarantees as defined in MMC 22.68.040(D) – Final Subdivision Process for Preliminary and Short Subdivisions, are required.

Maintenance Financial Securities

A two-year maintenance bond, or other surety acceptable to the City, is required at the time of final acceptance of the constructed public works improvements or recording of the final plat, whichever is later, per MMC 22.68.040(D). The maintenance financial security must be in place before the City releases the

performance security set in place at the start of construction.

Insurance
Before the issuance of construction permits, if work is within public rights-of-way or easements the Developer must provide a Certificate of Insurance on forms approved by the City. See MMC 12.36.150. The insurance must not be cancelable without 30 (thirty) days of written notice to the City.

1.9.5 Record Drawings

Engineering record drawings must be submitted upon completion of construction and prior to final inspection approval. In some cases, these drawings will be required during the inspection process to approve facilities before the next phase of construction can proceed. Record drawings must be submitted prior to final acceptance of any private or public construction project. The record drawings must show changes in final locations and elevations of curb and gutter, storm drain lines, water lines, sewer lines, catch basins, manholes, fire hydrants, valves, new and existing utilities and all other miscellaneous items included in the work. Strikethrough the outdated data and report the accurate data beside the strikethrough.

Initial submittal of record drawings is limited to PDF copies of the construction drawings. After approval is received, the City requires the following for the final record drawing submittal:

- AutoCAD drawing, with the data tied to NAD 1983/1991 Washington State Plane North coordinates. Elevations must be based on NAVD 88 vertical datum.
- ArcGIS .shp file
- Multi-page PDF of the complete plan set.
- Individual TIFF images (each sheet as a separate image) using the state's requirements for producing digital images for archive purposes. Please see WAC Chapter 434-663.
- Bond paper copy of the record drawings.

1.10 CONSTRUCTION

1.10.1 Preconstruction Conference

The developer must schedule and attend a pre-construction conference with the city prior to beginning working on the site. The contractor, developer, certified erosion and sediment control lead, and design engineer must be in attendance.

1.10.2 Inspection

The Director shall have authority to enforce these Standards as well as other applicable specifications. The Director shall appoint personnel as appropriate to inspect work completed pursuant to these Standards; they shall exercise such authority as the Director may delegate. It is the responsibility of the developer, contractor or their agents to have an approved set of plans and permits at the job site wherever work is being accomplished. If the plans cite these Standards without providing the specific text, drawings or details, then a copy of these

Standards must also be present at the job site. It is the responsibility of the developer, contractor or their agents to notify the City in advance of the commencement of any authorized work, in accordance with permit requirements. If requested by the City, the applicant/developer may be required to provide tests to substantiate the adequacy and/or placement of construction materials.

1.10.3 Construction Noise

Pursuant to MMC 6.04.055, there must be no sound made by the construction, excavation, repair, demolition, destruction, or alteration of any building or property or upon any building site, including the moving and idling of construction machinery, outside the following hours:

Monday through Friday	7 a.m. to 8 p.m.
Saturday	9 a.m. to 8 p.m.
Sunday	9 a.m. to 8 p.m.
Legal holidays (RCW 1.16.050)	9 a.m. to 8 p.m.

If a holiday falls on a Saturday, it will be observed on the Friday before. If a holiday falls on a Sunday, it will be observed on the Monday after.

Exceptions and Extensions to the above are:

- Construction on residential property relating to temporary projects for the maintenance or repair of homes, grounds, or appurtenances is allowed between 7 a.m. and 9 p.m. any day of the week.
- Exemptions may be allowed in accordance MMC 6.04.055.

These guidelines will not limit or prohibit more restrictive hours for work authorized under a permit issued by the City if conditions warrant, nor is it intended to replace MMC 6.04.055, which shall govern and take precedence should discrepancies exist.

1.10.4 Erosion and Water Quality Control

Temporary erosion and water quality control measures shall be required in accordance with the latest edition of the DOE Stormwater Management Manual for Western Washington, SWPPP, WSDOT Standard Specifications for Road, Bridge and Municipal Construction, and the Drainage Design and National Pollutant Discharge Elimination System (NPDES) Permit.

On-site grading shall be done in a manner to minimize off-site erosion and sedimentation in conformance with all statutory requirements, permits and approved plans. Roads, bridges, bikeways, and pedestrian facilities shall be kept free of dirt, debris or any obstructions. At no time will silt and debris be allowed to drain into an existing or newly installed drainage or sanitary sewer facilities. Special provisions may be required of the Developer to prevent erosion of stockpile materials onto the roadway, ditches, storm system, or private property. Stockpiles must not impede public travel unless specifically approved by the

Director.

The Developer may be required to obtain a Construction Stormwater General Permit from the Washington State Department of Ecology (DOE). When required, this permit shall be in place prior to starting construction activity.

Release of construction dewatering greater than 25 NTU is not permitted. Dewatering above that threshold may be stored or processed within settling basins and/or mechanical filtration tanks to reduce turbidity to NTU compliant thresholds.

1.10.5 Right-of-Way and Site Maintenance

The Developer shall schedule and control work so as to comply with all applicable provisions of City of Monroe land use codes and applicable state and federal codes, to prevent any hazards to public safety, health and welfare. On existing roads, two-way traffic for vehicles, bicycles and pedestrians shall be maintained at all times unless detour plans or lane closures have been approved in advance by the Director. Pedestrian and vehicular access to occupied buildings shall be maintained.

The Developer is responsible for all traffic control in accordance with the WSDOT/APWA Standard Plans for Road, Bridge and Municipal Construction (all applicable "K" plans) and/or the Manual on Uniform Traffic Control Devices (MUTCD). The Developer must apply for and obtain a Right-of-Way Disturbance Permit (ROWD).

No construction work shall commence until all approved traffic control is in place. The developer must provide a minimum of 48 hours advance notice to the City by emailing roads@monroewa.gov.

1.10.6 Protection of Property and Utilities

The Developer shall protect all private and public property on or in the vicinity of the work. The Developer must restore all damaged or destroyed property to its former condition.

The Developer shall protect private and public utilities, including telephone and telegraph lines, power lines, sewer and water lines, railroad tracks and appurtenances, highway lighting and signal systems, and similar facilities. The Developer must call 811 Dial-A-Dig before beginning any excavation. Local utilities shall be notified of locate requeste at least two business days before the scheduled excavation per RCW 19.122. Utility service interruptions must be coordinated through the City of Monroe. The Developer must submit a request for utility interruptions to the city inspector a minimum of two weeks prior to proposed construction.

1.11 Underground Utilities

1.11.1 General

The WSDOT/APWA Standard Specifications apply unless modified herein by the Monroe Standards.

Soil treatment including but not limited to fly-ash and cement, may not be used as fill or trench backfill without Public Works written approval and any proposal for such work must include written specifications by a licensed geotechnical engineer that includes mixing proportions, equipment used, testing, inspection and stormwater runoff water-quality testing and control.

When trenching through existing pavement, the open cut must be a neat line made by either saw cutting, jackhammering, or ground on a continuous line. Saw cutting will be required unless the cut is made prior to reconstruction or an overlay.

Temporary pavement patching must be accomplished by using cold mix, ½" HMA, steel plates, or the product Easy Street or equal. Steel plates must have cold mix or HMA ramps along the edges and appropriate advance warning signage.

Where trench excavation equals or exceeds a depth of 4 feet, the Developer must provide, construct, maintain, and remove, as required, safety systems that meet the requirements of the Washington Industrial Safety and Health Act, RCW 49.17, including WAC 296-155. The trench safety systems must be designed by a qualified person, and meet accepted engineering requirements (see WAC 296-155-650-66411).

The Developer must furnish, install, and operate all necessary equipment to keep excavations above the foundation level free from water during construction, and must dewater and properly dispose of the water so as not to cause injury to public or private property or nuisance to the public. Sufficient pumping equipment, in good working condition, must be available at all times for all emergencies, including power outage, and must have available at all times competent workers for the operation of the pumping equipment. Portable power generators shall be of the quiet/whisper type. Storage tanks must be available if the situation dictates their need to meet water quality standards.

Compaction tests will be required to ensure adequate compaction on all lifts. All compaction tests must be conducted by a licensed testing laboratory at the expense of the Developer. Provide written documentation of test results to the City.

Water jetting or water settling of backfill in trenches is not permitted.

1.11.2 Requirements to Underground Utilities Associated with Developments

In accordance with MMC 22.2.050 all new utilities in new developments are required to be installed underground.

1.11.3 Trench Excavation

Dimensions
The length of trench excavation in advance of pipe laying must be kept to a minimum and shall not exceed 150 feet. The maximum permissible trench width between the foundation level to the top of the pipe must be 40 inches for pipe 15

inches or smaller inside diameter, or 1 ½ times the pipe inside diameter, plus 18 inches for pipe 18 inches or larger (see Standard Detail 102). If the maximum trench width is exceeded without written authorization from the City, the Developer will be required to provide pipe of higher strength classification or provide a higher class of bedding.

Interferences

The Developer must not interfere with any existing utility without the written consent of the utility owner. If it becomes necessary to remove or relocate an existing utility, this must be completed by the owner of the utility or their designated contractor. No utility owned by the City may be moved to accommodate the Developer unless the cost of such work is borne by the Developer. The cost of moving privately-owned utilities must be similarly borne by the Developer unless other arrangements have been made with the person, company or entity owning the utility. The Developer must support and protect by timbers or appropriate methods all pipes, conduits, poles, wire, or other apparatus which may be in any way affected by the excavation work, and do everything necessary to support, sustain, and protect them under, over, along, or across the work. In case any of the pipes, conduits, poles, wires, or apparatus should be damaged, they must be repaired by the agency, person, company or entity owning them, and the expense of such repairs will be charged to the Developer, and its bond will be liable therefor. The Developer will be responsible for any damage done to any public or private property by reason of the breaking of any water pipe, sewer, gas pipe, electric conduit, or other utility, and its bond will be liable therefor. The Developer shall take all actions necessary to determine the existence and location of all underground utilities and protect the same against damage.

Protection of Adjoining Property

The Developer must at all times, and at its own expense, preserve and protect from injury any adjoining property. Where in the protection of such property it is necessary to enter upon private property for the purpose of taking appropriate protective measures, the Developer must obtain written permission from the owner of such private property for such purpose. The Developer must, at its own expense, shore up and protect all buildings, walls, fences, or other property likely to be damaged during the progress of the excavation work and will be responsible for all damage to public or private property or highways resulting from the Developer's failure to properly protect and carry out the work. Whenever it may be necessary for the Developer to trench through any lawn area, the sod must be carefully cut and rolled and replaced after ditches have been backfilled and properly compacted. All construction and maintenance work must be completed in a manner that shall leave the lawn area clean of earth, rocks and debris and in a condition equal to or better than that which existed before such work began. The Developer must not remove, even temporarily, any trees or shrubs which exist in parking strip areas or easements across private property without first having notified and obtained the consent of the property owner, or in the case of public property, the City of Monroe.

Fences, Barriers

The Developer must erect such fence, railing, or barriers about the site of the work as to prevent safety hazards to persons using city streets or sidewalks, and such protective barriers must be maintained until the work is completed or the danger removed. One-half hour prior to sunset, there must be placed upon such place of excavation and upon any excavated materials or structures or other obstructions to streets suitable and sufficient warning lights, flashing or continuous burn, whichever

is appropriate, and which must be maintained throughout the night for the entire construction period. It is unlawful for anyone to remove or tear down the fence or railing or other protective barriers or any lights provided there for the protection of the public.

Removal of Attractive Nuisance
It is unlawful for the Developer to allow or permit to remain unguarded, at the place of excavation or opening, any machinery, equipment, or other devices having the characteristics of an attractive nuisance likely to attract children and be hazardous to their safety or health.

1.11.4 Trench Backfill

Trench backfill must conform to Standard Detail 102.

Unsuitable backfill material must be removed from the site and hauled to an appropriate disposal site.

Imported material must meet the requirements of Gravel Borrow, Crushed Surfacing Top Course, or Crushed Surfacing Bottom Course as specified in the appropriate materials section of the WSDOT/APWA Standard Specifications.

1.11.5 Compaction

Trench backfill must conform to Standard Detail 103 and be spread in layers and compacted by mechanical tampers of the impact type. The backfill material must be placed in successive layers with the first layer not to exceed 18'' above the pipe, and the following layers not exceeding 12 inches in loose thickness, with each layer being compacted to the density specified below:

Improved areas such as street and sidewalks must be compacted to at least 95 percent of maximum dry density in the top 4 feet of the backfill. Backfill 4 feet and deeper must be compacted to at least 90 percent of maximum dry density.

Unimproved area or landscape areas must be compacted to at least 90 percent of maximum dry density.

1.11.6 Trenching Longitudinal to Roadway

All utilities that are within the roadway section and longitudinal to the roadway, must be backfilled according to the requirements listed in Standard Detail 102 to the pavement patch level or subgrade, whichever applies.

When groundwater levels are encountered within 3 feet of finished grade, a 4-inch diameter, rigid PVC perforated pipe drain must be installed parallel to all proposed mains in the same trench. This perforated pipe must be bedded in a minimum 6 inch depth of clear crushed rock. Crushed rock backfill must further be placed to a minimum height of 6 inches above the pipe. The pipe must be installed a minimum of 3 feet below finished grade. Drain pipes must connect to the City storm system at their low point. If no City storm system is available for connection, in lieu of installing the drain pipe system described above, the entire trench section must be backfilled with Crushed Surfacing Base Course.

Pavement restoration of longitudinal trenching for all underground utilities must be

completed according to Standard Detail 317. The limits of paving will be as determined by the City on a project specific basis, and will require full lane width grinding and overlays unless otherwise approved by the City.

1.11.7 Trenching Transverse to Roadway

Utility trenching that crosses transversely to the roadway alignment will not be permitted unless it can be shown that alternatives such as jacking, boring, or tunneling are not feasible or unless the utility can be installed just prior to reconstruction or overlay of the road. Should an open cut be approved, the trench must be backfilled according to the requirements listed in Standard Detail 102. One lane must remain accessible to emergency vehicles at all times unless other arrangements have been previously approved in a Right-of-Way Disturbance Permit. When high groundwater levels are encountered within 3 feet of finished grade, a four (4) inch diameter, rigid PVC perforated pipe drain must be installed parallel to all mains. This perforated pipe must be bedded in a minimum six (6) inch depth of clear crushed rock. This crushed rock fill must further be placed to a minimum height of 6 inches above the pipe. The pipe must be installed a minimum of 3 feet below finished grade. Drain pipes must connect to the City storm system at their low point. If no City storm system is available for connection, in lieu of installing the drain pipe system described above, the entire trench section must be backfilled with Crushed Surfacing Base Course.

Pavement restoration of transverse trenching for all underground utilities must be completed according to Standard Detail 317. The limits of paving shall be determined by the City on a project-specific basis.

1.11.8 Jacking, Boring, or Tunneling

As a condition of permit approval, in certain situations, the City may require jacking, boring or tunneling under pavements, buildings, railroad tracks, etc. The Developer will install the pipe by jacking, boring, or tunneling, or installing the pipe in a casing pipe by a combination of these methods. The Developer will be liable for damage to any existing facilities as a result of the jacking, boring, or tunneling installation work. Approvals from other agencies or companies may be required for the proposed work.

The Developer must obtain all necessary permits, approvals, and easements as may be necessary, and must provide copies to the City during the permit review process.

When use of a casing pipe is required, the Developer must select the appropriate gauge and size for the intended application, unless otherwise indicated on the approved plans. During jacking or tunneling operations, particular care must be exercised to prevent caving ahead of the pipe which will cause voids outside the pipe. When the carrier pipe is installed within a casing pipe, the carrier pipe must be skidded into position in an acceptable manner and to the line and grade as designated. The annular space between the casing and the pipe must be filled with controlled density fill or as otherwise approved.

Prior to jacking or tunneling activities, the Developer must submit shop drawings to the City for approval describing the activities, including dimensioning of pit length, the size of underground borings, and a complete description of shoring.

1.11.9 Seepage Barriers

Utility trenches where seepage is observed or likely to occur must have in-line trench dams or have “Seepage Barriers” installed periodically in the trench according to the following criteria:

If the roadway slope that contains the utility trench is equal to or greater than 7 percent but less than 10 percent, seepage barriers must be installed at 200-foot intervals;

If the roadway slope that contains the utility trench is equal to or greater than 10 percent but less than 15 percent, seepage barriers must be installed at 150-foot intervals;

Seepage Barriers must consist of Controlled Density Fill (CDF) or an alternative approved by the City, must include a rigid perforated PVC pipe drain encased within drain rock, and must connect to an adjacent catch basin.

1.12 TRAFFIC CONTROL

1.12.1 General

All work within the City righs-of-way must first obtain a Right-Of-Way Disturbance Permit.

Traffic control for all projects shall comply with Chapter 6 of the Manual on Uniform Traffic Control Devices (MUTCD). It shall be the Developer’s responsibility to furnish and maintain all required labor and materials as needed to the satisfaction of the Director. A Traffic Control plan must be submitted a minimum 72 hours before the proposed work. Call 24 hours before work to schedule a field inspection to approve installation.

The Developer shall keep existing streets adjacent to or within the limits of the project open and maintained in a safe condition for traffic at all times. The Developer shall remove any deposits or debris and shall repair any damage resulting from his operations.

Construction shall be conducted so as to cause as little inconvenience as possible to abutting property owners. Convenient access to driveways, houses and buildings along the line of work shall be maintained. Access shall also be maintained to fire hydrants, water valves and other utility control valves and structures, and postal service to mail receptacles.

Sign material shall meet MUTCD standards for applicable shape, material and legibility. No hand painting of signs will be allowed. Signs shall be placed so as not to impair the use of sidewalks and travel lanes, or create hazards thereto. Signs and supports shall be removed from display when not needed as part of the development activity.

Steel plates over the roadway must use proper signage per MUTCD, including “Motorcycles Use Extreme Caution” per RCW 47.36.200.

1.12.2 Detours and Road Closures

Approval must be received from the Director for all detours and road closures. The Developer shall submit a traffic control plan complying with the MUTCD to the Director for review and approval.

During construction that impacts signalized locations, an off-duty, uniformed police officer may be required at all times when the signal is temporarily taken out of service. Officers may also be required for new traffic signal work. If a uniformed police officer is required, the contractor shall obtain this service by contacting the City of Monroe Police Department at (360) 794-6300 at least five days in advance of the need.

1.13 ERRORS AND OMISSIONS

At the discretion of the Director, any significant errors or omissions in the approved plans or information used as a basis for such approvals may constitute grounds for withdrawal of the approvals and/or stoppage of any or all permitted work. It shall be the responsibility of the Developer to show cause why such work should continue, and make such changes in plans that may be required by the Director before the plans are reapproved.

1.14 PENALTIES

Failure to comply with these Standards will be cause for withholding or withdrawing approval of plans or drawings; withholding of bonds, final inspection approval or occupancy certificates; and/or other penalties as provided within the Monroe Municipal Code.

1.15 STANDARD GENERAL DRAWINGS

Drawing #	Description
101	Typical Utility Locations
102	Trench Backfill
103	Trench Compaction

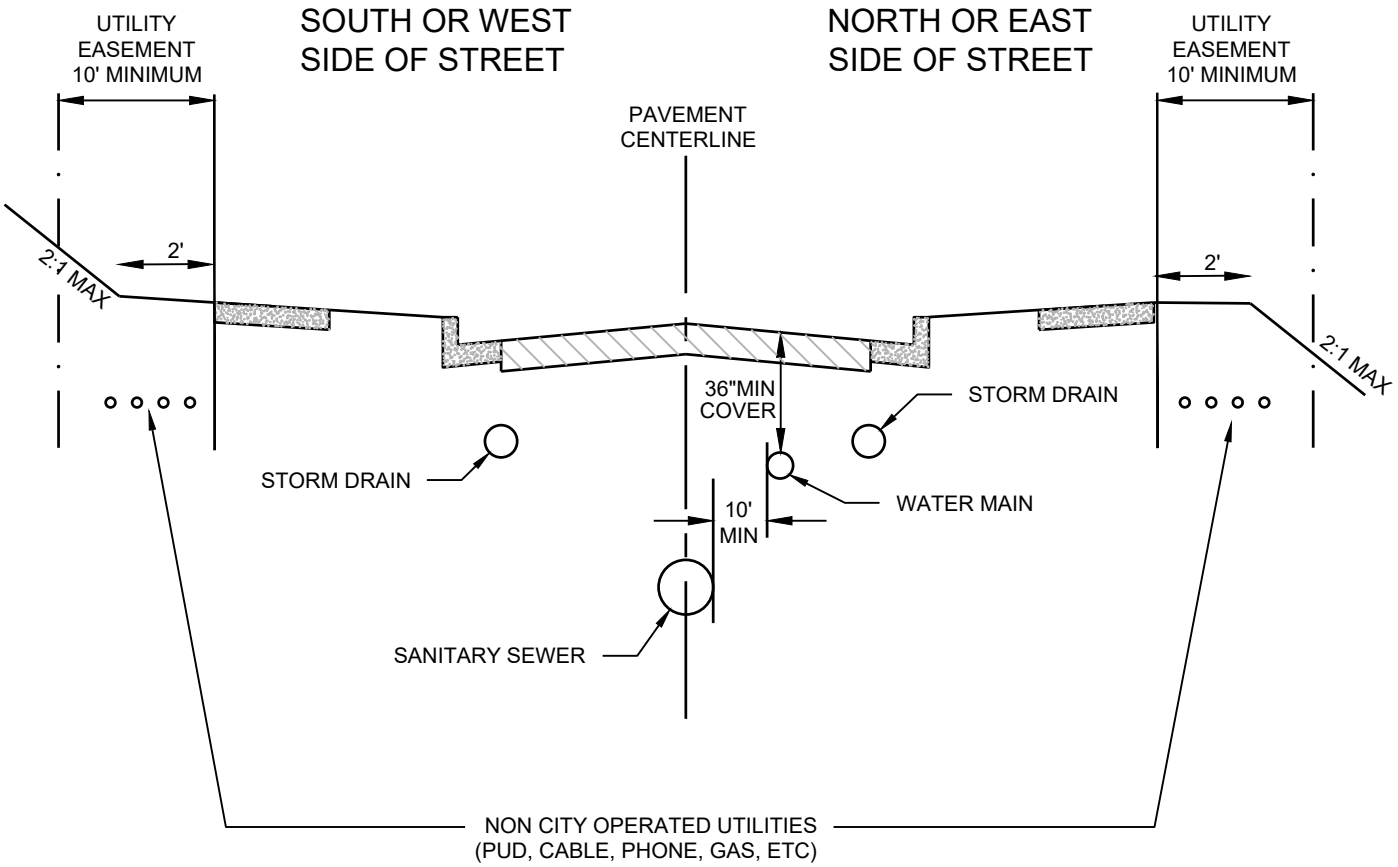

NOTES

1. 5' MINIMUM SEPARATION BETWEEN UTILITIES.

MONROE WASHINGTON	TYPICAL UTILITY LOCATIONS	101
	NOT TO SCALE | FEB 1, 2024	

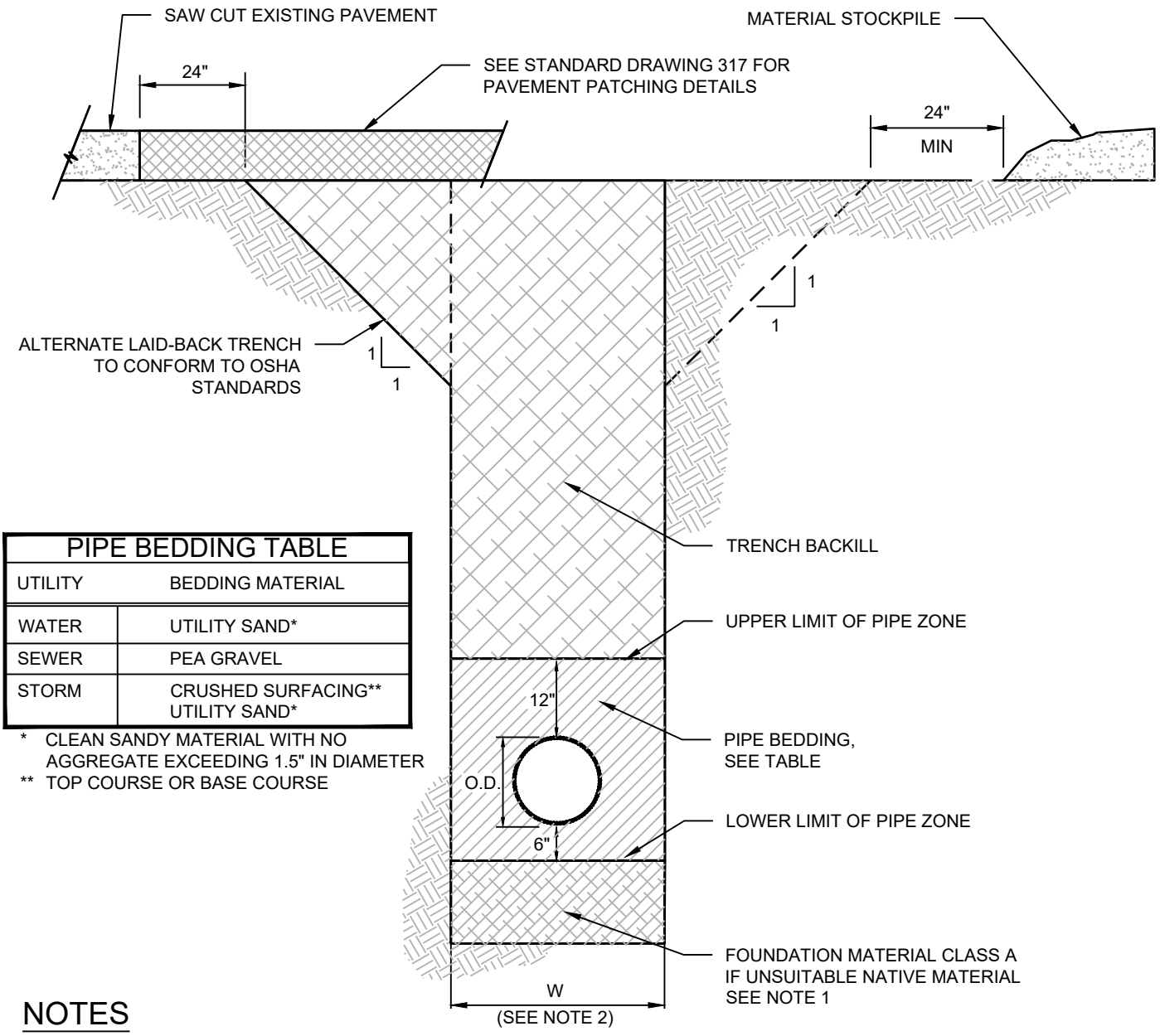

PIPE BEDDING TABLE	
UTILITY	BEDDING MATERIAL
WATER	UTILITY SAND*
SEWER	PEA GRAVEL
STORM	CRUSHED SURFACING** UTILITY SAND*

* CLEAN SANDY MATERIAL WITH NO AGGREGATE EXCEEDING 1.5" IN DIAMETER

** TOP COURSE OR BASE COURSE

NOTES

1. FOUNDATION, BEDDING, AND GRAVEL BORROW MATERIAL SHALL CONFORM TO THE CURRENT EDITION OF THE STANDARD SPECIFICATIONS FOR ROAD, BRIDGE AND MUNICIPAL CONSTRUCTION WSDOT/APWA.
2. W = MAXIMUM WIDTH OF TRENCH.
   FOR PIPES 15" OR LESS W=40".
   FOR PIPES GREATER THAN 15", W=1-1/2 X I.D. +18".
3. TRENCH CROSSINGS SHALL BE BACKFILLED WITH CDF HAVING A COMPRESSIVE STRENGTH OF 50 PSI TO 100 PSI AT 28-DAY COMPRESSIVE STRENGTH.
4. PAVED AREAS TO BE BACKFILLED WITH CRUSHED SURFACING TOP COURSE OR CRUSHED SURFACING BASE COURSE COMPACTED TO 95% MODIFIED PROCTOR DENSITY.
5. UNPAVED AREAS TO BE BACKFILLED WITH SUITABLE NATIVE MATERIAL OR CRUSHED ROCK TO 90% MODIFIED PROCTOR DENSITY.

MONROE WASHINGTON

TRENCH BACKFILL

NOT TO SCALE | FEB 1, 2024

102

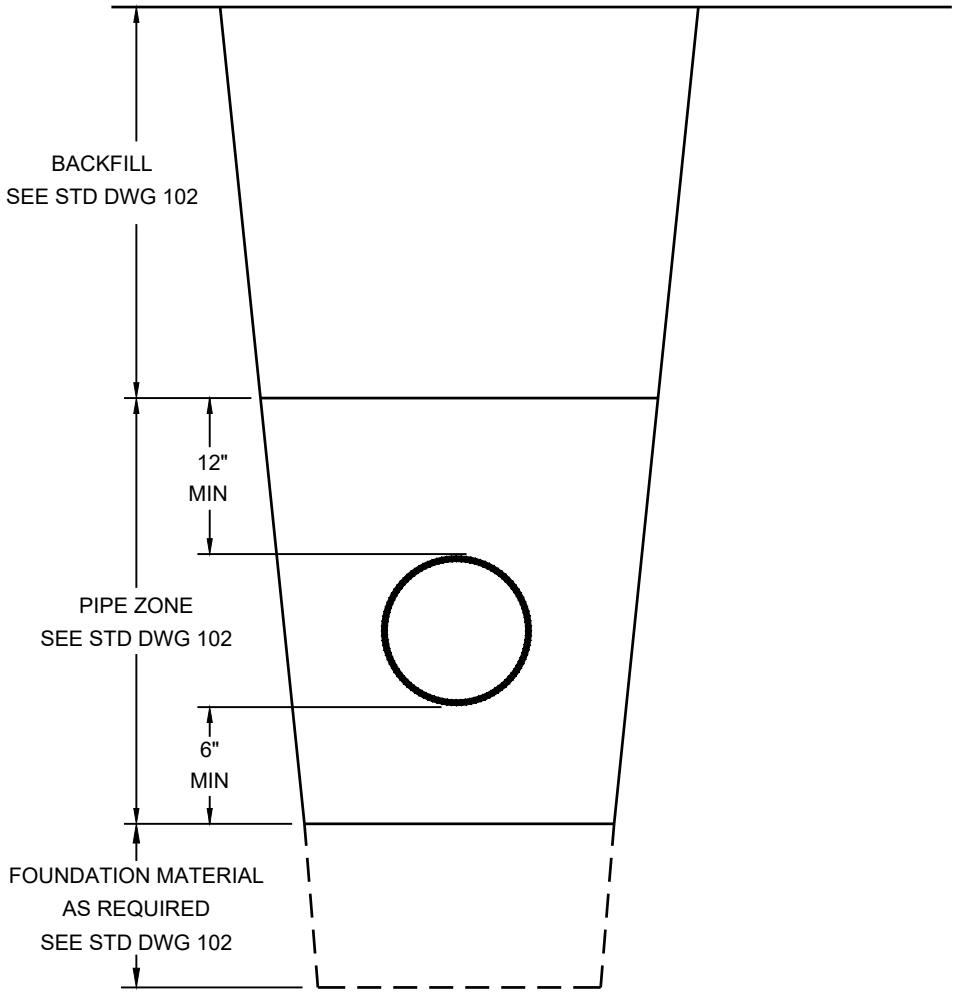

SECTION

NOTES

1. ALL BACKFILL MATERIAL SHALL BE PLACED IN LIFTS NOT TO EXCEED 12 INCHES.

2. MECHANICAL COMPACTION OF BACKFILL SHALL BEGIN EIGHTEEN INCHES ABOVE THE TOP OF PIPE.

3. EACH LIFT SHALL BE MECHANICALLY COMPACTED TO THE REQUIRED DENSITY PRIOR TO PLACING SUCCEEDING LIFTS OF BACKFILL MATERIAL.

4. COMPACTION TESTS SHALL BE AS REQUIRED BY THE CITY ENGINEER BUT IN NO CASE LESS THAN 2 TESTS EVERY 200 FEET OF TRENCH. (ONE AT SUBGRADE AND ONE AT 50% OF TRENCH DEPTH)

5. IN PLACE DENSITY WILL BE DETERMINED BY ONE OR MORE OF THE FOLLOWING METHODS:
   - 5.1. ASTM D1556; TEST FOR DENSITY OF SOIL IN PLACE BY THE SAND CONE METHOD
   - 5.2. ASTM D2167; RUBBER BALLOON METHOD
   - 5.3. ASTM D2922; NUCLEAR METHOD

6. LABORATORY DENSITY WILL BE DETERMINED BY ASTM D693, MOISTURE DENSITY RELATIONS OF SOILS AND SOIL AGGREGATE MIXTURES.
7. PAVED AREAS TO BE BACKFILLED WITH CRUSHED SURFACING TOP COURSE OR CRUSHED SURFACING BASE COURSE COMPACTED TO 95% MODIFIED PROCTOR DENSITY.
8. UNPAVED AREAS TO BE BACKFILLED WITH SUITABLE NATIVE MATERIAL OR CRUSHED ROCK TO 90% MODIFIED PROCTOR DENSITY.

MONROE WASHINGTON

TRENCH COMPACTION

NOT TO SCALE | FEB 1, 2024

103

CITY OF MONROE PUBLIC WORKS
DESIGN, CONSTRUCTION AND OPERATIONS STANDARDS

SECTION 3
STREETS AND RELATED WORK

TABLE OF CONTENTS

3.1 GENERAL REQUIREMENTS 1

3.2 ROADWAY CLASSIFICATION AND GEOMETRICS 1

3.2.1 GENERAL 1
3.2.2 HORIZONTAL AND VERTICAL ALIGNMENT 4
3.2.3 SIGHT DISTANCE 10
3.2.4 INTERSECTIONS 10
3.2.5 CURB RETURN RADIUS 10
3.2.6 STREET ENDS 11
3.2.7 TRANSIT AMENITIES 11

3.3 TRAFFIC IMPACT ANALYSIS 11

3.3.1 RESPONSIBILITY AND PURPOSE 11
3.3.2 TRAFFIC IMPACT AND ANALYSIS CONTENTS 12

3.4 TRAFFIC CONTROL 14

3.4.1 TRAFFIC CONTROL SIGNAGE – PERMANENT 14
3.4.2 CHANNELIZATION PLANS 14
3.4.3 TRAFFIC SIGNAL PLANS AND SPECIFICATIONS 14

3.5 SURVEYING AND MONUMENTATION 15

3.5.1 DESCRIPTION 15
3.5.2 MATERIALS 15
3.5.3 CONSTRUCTION 15

3.6 STREET ILLUMINATION AND ELECTRICAL POWER 16

3.6.1 GENERAL 16
3.6.2 DESIGN STANDARDS 16

3.7 ASPHALT, CONCRETE AND PAVEMENT PATCHING 17

3.7.1 DESCRIPTION 17
3.7.2 MATERIALS 17
3.7.3 CONSTRUCTION REQUIREMENTS 17

3.8 GUARDRAILS 20

3.9 MAILBOXES 20

3.10 ROCKERIES AND ROCK WALLS 20

3.10.1 DESCRIPTION 20
3.10.2 GENERAL 21
3.10.3 MATERIALS 21
3.10.4 CONSTRUCTION REQUIREMENTS 21

3.11 CEMENT CONCRETE SIDEWALKS 22

3.11.1 DESCRIPTION....22
3.11.2 MATERIALS....22
3.11.3 CONSTRUCTION REQUIREMENTS....22

3.12 CURB AND GUTTER SECTIONS 25

3.12.1 DESCRIPTION....25
3.12.2 MATERIALS....25
3.12.3 PLACING CONCRETE....25
3.12.4 CURING AND PROTECTION....26

3.13 CEMENT CONCRETE DRIVEWAY 26

3.13.1 DESCRIPTION....26
3.13.2 MATERIALS....26
3.13.3 CONSTRUCTION REQUIREMENTS....27

3.14 PROPORTIONING OF MATERIALS 29

3.14.1 CONTROLLED DENSITY FILL (CDF)....29
3.14.2 GRAVEL BORROW....29
3.14.3 QUARRY ROCK....29
3.14.4 NON-SHRINK GROUT....29

3.15 PARKING 29

3.15.1 GENERAL....29
3.15.2 CONSTRUCTION....29
3.15.3 PARKING LOT ILLUMINATION....30

3.16 STREET TREES AND LANDSCAPING 30

3.16.1 PURPOSE....30
3.16.2 IMPLEMENTATION....30
3.16.3 STREET TREE LIST....31
3.16.4 WETLAND PLANTS....37

3.17 STANDARD STREET DRAWINGS....38

CITY OF MONROE PUBLIC WORKS
DESIGN, CONSTRUCTION AND OPERATIONS STANDARDS

SECTION 3
STREETS AND RELATED WORK

3.1 GENERAL REQUIREMENTS

All work performed in the design, preparation of plans, and construction or improvement of all streets and appurtenances, whether public or private, is the responsibility of the Developer and must be completed to the satisfaction of the Public Works Director in accordance with these standards.

All design and construction of public and private streets and appurtenances shall conform to these Standards, the latest editions of the WSDOT/APWA Standard Specifications and the AASHTO Policy on Geometric Design of Highways and Streets. If inconsistencies arise, the City of Monroe Design and Construction Standards shall take precedence.

No permits will be issued to start work until plans for the work are approved and the necessary bonds have been provided.

Any revisions to previously approved civil construction plans must be submitted to and approved by the Public Works Director before construction. A set of record drawings must be submitted at the completion of the project. Final acceptance of the work is conditioned on approval of record drawings. See individual utility sections of the City of Monroe Design and Construction Standards for more specific record drawing requirements.

The Monroe Municipal Code and the City of Monroe Design and Construction Standards establish requirements for the installation of street improvements. Permit applications may be reviewed at a scheduled pre-application conference with the Developer or at the time of permit application submittal and/or issuance.

See Section I – General Considerations, for construction plans requirements and required Standard Notes on Plans.

3.2 ROADWAY CLASSIFICATION AND GEOMETRICS

3.2.1 General

3.2.1.1 Road Classifications

1. Contact the Public Works Department for the roadway functional classification of existing roads. Minimum requirements for each classification are shown in Standard Detail 300. Additional right-of-way and traffic lanes may be required to accommodate turning movements at intersections and

parking, as determined by a traffic impact analysis for a proposed project and future anticipated needs.

2. The minimum structural sections and location of curb & gutter and sidewalk are shown on Standard Details 301 through 304. The Public Works Director may require the final lift of asphalt to be bonded and delayed for up to two years from final plat approval or final build out of the development, whichever is longer. A geotechnical study including recommendations will be required for any proposed new road construction, widening of existing roadways, or major repair and overlay work to verify structural section requirements. The Developer must submit such reports, prepared by a professional engineer licensed in the state of Washington, for review by the Public Works Department. Modifications to the minimum road structural sections may be required to address site specific soil conditions, drainage considerations, and vehicle loads, and when necessary increased over the minimum section shown in the Standards. The proposed road section shall have a structural number equal to or greater than the standard. Where transit or truck traffic is anticipated, the Developer's traffic and geotechnical engineers should evaluate the adequacy of the proposal and recommend additional specific measures to ensure a minimum 20-year design life for the new asphalt pavement section. A minimum 40-year design life is to be used for concrete pavement sections.

3.2.1.2 Rights-Of-Way and Easements

1. Deeded or dedicated right-of-way is required for all public roadway improvements. All portions of the traveled way, curbs, gutters, sidewalks, medians, bike lanes, drainage facilities, traffic signal system components, and other required improvements must be located within the right-of-way. If traffic control signage is not within the right-of-way, an easement must be provided that specifically allows the installation of traffic signage. That easement need not be exclusively for traffic signage.

2. Where existing right-of-way width is not sufficient to construct the required or planned future improvements, the Developer must obtain and dedicate to the City the necessary additional right-of-way.

3. Easements for construction, access, maintenance, sight distance preservation, roadway slopes, utilities, and storm drain installation may be required, in addition to required rights-of-way, in conjunction with roadway improvements. Street landscaping, as required, must be included in the easements if it is not within the right-of-way. If those easements are not within the boundaries of the proposed development under review, the Developer must obtain necessary easements and provide recorded copies of such easements to the City prior to approval of construction plans.

4. When off-site or on-site easements for the extension of streets are required, the easements must be approved and recorded prior to the approval of the construction plans and permits.
5. If an existing residential lot with a dwelling unit is short platted to add one additional residential dwelling unit, paved access can be 16 feet wide within a private access easement. However, only two dwelling units can use the access regardless of any future re-platting of the property.

3.2.1.3 Bike Lanes

On-street bikeways are generally shared with other motor vehicles on local access streets. It is desirable to provide dedicated bike lanes or off-street shared use paths on Collector and Arterial corridors. Bikeways are categorized below, based on degree of separation from motor vehicles and other transportation modes.

Shared use paths are at least 10 feet wide, with 12 feet being the preferred, but not required, width.

Bike lanes are 5 feet wide on a curbed road as measured from the face of curb and a minimum of 5 feet wide as a shoulder bike lane. On collector and arterial streets with on-street parking, the bike lane must be a striped 5-foot-wide lane outside of the 8-foot-wide parking strip. As a general rule, bike lanes are required on collector and arterial streets, but the design engineer must verify with the Director on a project specific basis.

Exact locations of bike lanes with respect to sidewalks and road lanes will be determined on a project specific basis. If the required bike lane will not fit within the existing right-of-way available, then the Developer must obtain, at their cost, and dedicate to the City the additional right-of-way and easements necessary. All bicycle facilities must conform to AASHTO/WSDOT standards for bike lanes, trails, and paths.

3.2.1.4 Private Streets

At a minimum all proposed private streets must satisfy all of the following requirements:

1. Must be located in an established tract providing legal access to each affected lot, sufficient to accommodate the required improvements; and
2. Must be located in a development where future road extension or half-road access to adjacent properties and/or existing or proposed streets is not feasible because of environmental constraints or full build-out of adjacent parcels; and
3. Must be meet the street standards outlined in Standard Detail 300 and the Monroe Municipal Code; and
4. Must be less than 150 feet long as measured from the curbline of the intersecting public road along the centerline of the private road to the end of

pavement or curb or, if longer than 150 feet, terminate in an approved emergency vehicle turn-around that is accessible at all times for emergency and public service vehicle use; and

5. Must not conflict with the goals of the City of Monroe Comprehensive Plan or the Capital Facilities Plan; and
6. Must not result in land locking of present or future parcels; and
7. Must be maintained by an owner or homeowners association or other legal entity made up of all benefited property owners, as noted on the face of the plat; and
8. Must be clearly described on the face of the plat, and clearly signed at appropriate locations as a private street, not maintained by the City of Monroe.

3.2.1.5 Clear Zones

Roadside obstacles in the right-of-way shall be located so that adequate clear zones are provided.

1. Clear zone standards for road with posted speed limits of 35 mph or less shall be:
   A. Two (2) feet behind the face of curb, or
   B. Ten (10) feet beyond the edge of traveled way (for uncurbed shoulders).
2. Clear zone standards for roads with posted speed limits greater than 35 mph shall comply with Chapter 7 of the WSDOT Design Manual.
3. New roadside features that could present a public hazard shall be placed outside the clear zone areas.
4. Installation of poles and other above ground appurtenances will not be permitted in sidewalks, walkways, or bikeways. There shall be an unobstructed vertical clearance of at least seven (7) feet above the surface of any sidewalk or walkway and eight (8) feet above any bikeway.

3.2.2 Horizontal and Vertical Alignment

Alignment of roadways, both horizontally and vertically, must be in conformance with the guidelines of the AASHTO Policy on Geometric Design of Highways and Streets and the WSDOT Design Manual. All new frontage improvements or other street improvements, whether public or private, must conform to the AASHTO minimum design geometrics for safe stopping and entering sight distance, consistent with the procedure described in the AASHTO Policy or the Monroe Standards. The minimum sag vertical curve for fire apparatus access shall be nine degrees of grade change over fifty feet of length (K value of 5.55).

3.2.2.1 Street Layout

Design considerations for street layout in new developments must be consistent with the City of Monroe Comprehensive Plan, MMC Title 22, and include the following:

1. Provide for the continuation or appropriate projection of existing streets in surrounding areas. This includes, but is not limited to, new/completed street linkages compatible with an overall city circulation network to provide improved connectivity of the street system, half-street improvements to provide access to adjacent developable or re-developable properties to minimize intersection spacing, and temporary road terminations to provide future extension to adjacent developable or re-developable properties.
2. Where a subdivision abuts or contains an existing or proposed arterial street, the City may require marginal access streets, reverse frontage lots with screen planting contained in a non-access reservation along the rear property line, deep lots with rear service alleys, or such other treatment as may be necessary for adequate protection of residential properties and to afford separation of through and local traffic.
3. A tangent must be introduced between reverse curves. The tangent must be at least 100 feet long for arterial and collector streets, and 50 feet long for residential access streets.
4. Street intersections with centerline offsets of less than 300 feet for arterials and collectors and 150 feet for residential access streets must be avoided.
5. Streets must intersect at right angles, plus or minus 5 degrees, measured along the street centerlines 10 feet beyond the intersection of the rights-of-way.
6. Property lines at street intersections must be rounded with a radius of at least 10 feet. A greater radius may be required in some situations and comparable cutoffs or chords in place of rounded corners may be permitted.
7. Street right-of-way widths must be as shown in Standard Detail 300. A wider right-of-way may be required to accommodate bicycle facilities, additional travel lanes, or other needs as determined by the traffic analysis and approved by the City.
8. The use of shared driveways is encouraged on arterials to minimize the number of access points.
9. Commercial and multifamily driveway centerline offsets must align with any opposing driveways or be offset by no less than 125 feet where possible.
10. Driveway access directly onto arterials may be denied if an alternate access is available.
11. Street layout shall provide access to adjoining, undeveloped property wherever feasible.

12. Where more than 30 dwelling units are designed or ultimately intended in a residential development, either single family, multifamily, retirement, or similar, there must be a minimum of two access points to the public street system. Such access points must be located at least one-half the maximum diagonal dimension of the development site apart and provide circulation, alternate emergency vehicle access routes, through access, and meet general area transportation design considerations.
13. Street grade must not exceed 12 percent.

3.2.2.2 Half Streets (see Standard Detail 301H)

1. A half street may be permitted as an interim Local Access street facility when:
    a. Such street will not serve as primary access to more than 30 dwelling units or parcel; and
    b. Such alignment is consistent with or will establish a reasonable circulation pattern; and
    c. There is reasonable assurance of obtaining the prescribed additional right-of-way from the adjoining property with topography suitable for completion of a full-section road.
2. A half street must meet the following requirements:
    a. Right-of-way width of the half street must equal at least 37 feet and encompass all required improvements; and
    b. If feasible, the half street must be graded consistent with the centerline of the ultimate road section on the property line; and
    c. The traveled way must be surfaced the same as the designated road type to a width not less than 23 feet (28 feet with parking lane) as measured from face of curb; the sidewalk and landscape must be constructed as required for the designated road type; and
    d. The property line edge of the street must be finished with temporary curbing, shoulders, ditches, and/or side slopes so as to ensure proper drainage.
    e. Bank stability must be placed on the unfinished side of the street; and
    f. Half streets must not intersect other half streets.
3. When a half street is eventually completed to a whole street, the completing builder must reconstruct the portions of the original half street as necessary to produce a proper full-width street meeting all criteria of these Standards.
4. The Developer must obtain any right-of-way or easements needed to accomplish the above.

3.2.2.3 Alleys

1. An alley must have at least a 20-foot-wide paved surface within a right-of-way or tract at least 25 feet wide.
2. Alleys will have an inverted crown to keep drainage facilities readily accessible, with appropriate storm drainage facilities to collect and convey stormwater runoff.
3. Alley intersections and sharp horizontal changes in alignment must meet low speed turning radii and sight distance requirements to permit safe vehicular movement.
4. Dead-end alleys are not permitted.

3.2.2.4 Driveways

Driveways must be sized and located in a manner that maintains or provides safe traffic movement on the accessed street.

No driveway approach will be permitted to encompass any infrastructure, such as hydrants, meters, blow-offs, pump stations, etc. Permit conditions may require the Developer to relocate such infrastructure, including any within the limits of a curb return, which may be encroached upon as allowed.

1. At intersections, no portion of any driveway approach, including end slopes, will be permitted closer than 4 feet to the end of the curb return. Residential Driveways/Approaches must comply with the following:
    a. A driveway approach width is the length of curb fully depressed to match street grade to allow vehicular access into the property, not including any tapering height curb. Where there is no curb, the approach width is the driveway width at the edge of street pavement.
    b. Where a driveway approach in excess of 16 feet is requested for a single lot, the maximum approaches are as follows:

Table 1

Frontage	Maximum Driveway Approach One Driveway	Maximum Driveway Approach Two Driveways
30 to 60 feet	20 feet	NA
Over 60 feet but not exceeding 100 feet	25 feet	20 feet each

2. Areas of Limited Street Improvements.
    a. Where standard gutters and curbs have been installed, but concrete sidewalks have not, the permit may authorize the Developer to construct the driveway approach, from the curb line to the subject property, of Hot Mix Asphalt. Such driveway approach must be constructed to approved

grade and must be adequate and suitable for the traffic to be carried by it. The permit will require that, if and when thereafter concrete sidewalks are constructed, the Developer or their successor must obtain a right-of-way permit and install concrete driveway approaches.

b. Where standard gutters and curbs have not been installed, the apron length must be measured along the property line and there must be not less than 20 feet of frontage between driveway approaches serving any one property. Permits will not be issued for any surface improvement or paving on the street right-of-way between driveway approaches unless a concrete curb or other physical obstruction of a design satisfactory to the Public Works Department is constructed and maintained by the owner along their property line so that the entrance and exit of vehicles to and from the owner's property will be restricted to the established driveway approaches. Pursuant to the permit conditions, the Developer may surface the driveway approaches or other areas within the right-of-way, extending the same type paving used on the subject property so that it merges with the street pavement; provided the paving is adequate and suitable for the traffic to be carried. Such extended paving between the property line and the street pavement must be to established grade or other slope, as designed by the Developer's engineer and approved by the Public Works Department, to provide for proper runoff.

c. Such paving between the property line and the street pavement may meet the street pavement at a point ahead of the curb opening in order to provide for safe deceleration of vehicles turning into the driveway. If the project paving is extended beyond the property line into a street right-of-way at an intersection or crossroad, the City may require the Developer to construct a suitable traffic island or curb to protect municipal facilities, as may be necessary.

d. Approaches - Encroachment on public property is prohibited. City street rights-of-way may not be used for private residential or commercial purposes. A permit for the construction of driveway approaches will not be issued unless vehicles to be served or serviced can be parked entirely within the private property lines.

3. Driveways accessing any arterial or collector street and serving more than 10 vehicle trips in any given hour may be required to align at all times with opposing driveways or be offset by a minimum of 125 feet. Restrictions on the access of a development may be imposed by the Public Works Department if the development is likely to exacerbate or create potential safety hazards as a result of the development.

4. The use of shared driveways is highly encouraged to minimize the number of access points on arterials and collector streets.

5. Driveways that extend more than 150 feet from a Public Road, or Fire Department accessible Private Road, must be designed as a Fire Lane.
6. Driveways giving access directly onto arterials may be denied if alternate access is available.
7. Commercial Driveways

   When allowed, driveways located closer than 100 feet from the approach to an arterial intersection may require medians, Type C curbs, and/or signing to restrict access to safe movements only.

   See Standard Details 310, 311, and 312.

   Grade: A maximum grade of 15 percent is allowed. Vertical curves must be used for smooth transitions at significant grade differentials.
8. Intersection Type Driveways

   Private intersection type driveway openings will be considered in lieu of conventional driveways in commercial areas if all the criteria below are met. However, meeting the criteria does not guarantee that an intersection type driveway will be allowed.

   a. Projected driveway usage is greater than 1,000 vehicles per day.
   b. The opening is at least 160 feet from any other intersection.
   c. The opening is at least 160 feet from any other driveway on the property frontage under control of the Developer.
   d. A minimum 100 feet throat length is provided between the curb line on the street and any area required for turning or parking maneuvers within the development.
   e. If a driveway intersects with state route right-of-way, the Developer must also coordinate with WSDOT.
9. Driveway throat Length Requirements for Commercial Properties

   The throat length is the unobstructed area measured from the inside face of curb to the first driveway or parking stall. The minimum throat length must be 25 feet for all land uses, and the throat length must be of sufficient length to eliminate interruption of through traffic on the primary roadway. Throat lengths for collectors and arterials will be at least 50 feet to accommodate higher driving speeds and traffic site distance requirements. The throat length for any driveway that will carry 50 or more trips in any single hour must be evaluated and addressed in the development traffic impact analysis for review by the City. The City reserves the right to require longer throat lengths if necessary to maintain traffic safety and uniform flow on the accessed street.

3.2.2.5 Private Access Tracts

Private Access Tracts are privately owned and maintained tracts that conform to the requirements shown on Standard Details 300, 302, and 303.

3.2.3 Sight Distance

In general, sight distance requirements must comply with the current AASHTO Policy on Geometric Design. The area within the site distance triangles will be subject to restrictions as necessary to maintain a clear view on the intersection approaches.

Intersection sight distances must be evaluated based upon the values noted on Standard Detail 331 for Sight Distance setback lines at controlled intersections. Sight distance requirements for each approach must be based upon the posted speed of the cross street. For uncontrolled and yield intersections along 25 mph local streets, the sight distance must be evaluated based upon the values noted in Standard Detail 332.

Driveways are also subject to sight distance triangle restrictions, including landscaping and placement of view obstructions, and landscape medians or islands. See Standard Detail 333.

Other factors, such as vertical and horizontal curves and roadway grades, need to be taken into account. Such factors may necessitate a modification to the intersection sight distance requirements.

The vertical clearance area within the sight distance triangle must be free from obstructions to a motor vehicle operator's view.

3.2.4 Intersections

Every intersection must be designed to accommodate the design vehicle appropriate for the highest classified street forming the intersection. Design vehicle must be SU for residential streets, and WB-40 for commercial area roadways. When the intersection is along a transit or school bus route, BUS design vehicle must be used as a minimum. If an intersection is utilized frequently by large vehicles, WB-50 may be used for design vehicle. All elements of the intersection, including turning lanes and channelizing islands, must be designed so that a design vehicle will not encroach onto curbs, sidewalks, traffic control devices, channelizing islands, or center divisional medians, or encroach into the travel lanes of opposing flow traffic.

3.2.5 Curb Return Radius

Intersection turning radii are 25 feet for local/local access roads, 30 feet for collector and arterial streets, and 40 feet for intersections with frequent bus or large truck turning movements. Auto turn diagram may be required to verify the adequacy of turning radii.

Where high concentrations of pedestrians would warrant a lesser radius, a reduced radius to minimize pedestrian crossing length will be considered so long as the turning movements are not subject to a high degree of large truck/bus movements.

3.2.6 Street Ends

All roadways greater than 150 feet in length and serving three or more dwelling units require an approved turnaround. Private access roads are allowed in short plats that serve less than ten single family lots or full plats in the infill zone that serve 30 or fewer dwelling units. The turnaround for short plats must be a cul-de-sac or hammerhead designed per Standard Detail 304. Cul-de-sacs must be provided at all permanent public street ends, and/or on any temporary dead-end public streets when the length of the street is more than 150 feet. Cul-de-sacs must be designed per Standard Detail 304. Permanent street ends may not exceed 600 feet in length. Private access roads and tracts serving one or two single family lots do not require a turnaround regardless of length, but fire suppression systems may be required by the Fire Marshall.

3.2.7 Transit Amenities

If a project is conditioned to widen or reconstruct a roadway section on an established transit route designated as either a collector or an arterial, an in-line bus stop or pullout must be constructed using concrete pavement. At such locations, a concrete pad for a bus shelter must be provided. Design of the concrete bus stops, bus pullouts, and bus shelter pads require review and approval by both the City and Community Transit.

3.3 TRAFFIC IMPACT ANALYSIS

3.3.1 Responsibility and Purpose

A Traffic Impact Analysis (TIA) is required for any development activity that adds 20 or more vehicle trips to a road during either the AM or PM peak hour or adds more than 20 daily trips to a roadway corridor that operates at or below Level of Service E. Such analysis must be prepared by a professional engineer, registered in the state of Washington, with experience in traffic engineering and/or transportation planning.

The extent of the analysis will be determined at the pre-application conference for the project and must be consistent with Public Works Department policies and procedures for the preparation of such analyses. Scoping the requirements for the analysis is intended to identify key issues early in the project planning and development stage and assist the City during the review and approval process. The City will prepare a checklist documenting the requirements for the analysis. An electronic copy of the TIA must be submitted with the development permit application and other completed forms as required by the Public Works Department application procedures. A copy of the completed checklist must also be submitted with the application. Studies submitted without the completed application material will be considered incomplete, requiring a resubmittal.

Traffic Impact Analyses must show how the proposed development will affect the existing and future transportation network. If the final use(s) of the proposal are not determined at the time of the study, the land use with the greatest overall traffic impact must be assumed for the study. Once the City has reviewed the analysis and comments

have been returned to the Developer, any required changes must be incorporated in the analysis and a revised report must be submitted to the City for final review and approval.

3.3.2 Traffic Impact and Analysis Contents

While individual reports may vary in style and format, certain information must be included as identified in the Public Works Department TIA checklist and guidelines for preparation of TIAs. The amount of detail required, as well as the overall extent of the study, will be determined during the pre-application conference on a project-specific basis. General requirements of the TIA are outlined below. More detailed requirements are provided in the TIA checklist and guidelines.

1. Project Description
    a. Project type and size.
    b. Project location, with vicinity map.
    c. Proposed site access, with site plan, at an appropriate scale for the project and vicinity.
    d. Minimum two-year (from existing condition) planning horizon. Longer planning horizon may be necessary when determining ultimate size of a roadway facility or addressing multiple phases of a project.
2. Existing Conditions
    a. Existing traffic volumes, daily turning movements.
    b. Daily and intersection counts completed within one year prior to the development application is deemed complete.
    c. Roadway network, including traffic control.
    d. Level of service calculations at impacted intersections and site entrances, if applicable.
    e. Parking supply.
3. Accident/Safety Conditions
    a. Sight distance analysis at intersections and access points. Minimum stopping and entering sight distance as defined by AASHTO must be shown on the site plan or similar plan.
    b. Clear zone analysis (document poles, hydrants, or other obstructions near travel edge).
    c. Evaluation of accident data as available.

4. Trip Generation and Distribution
    a. Trip generation using the latest ITE Generation manual or other approved method.
    b. Trip distribution and assignment map showing turning movements assigned to roadway network. The proposed development's trips are to be distributed through the street network to a level as prescribed in the City's TIA guidelines, typically five (5) peak hour trips.
    c. Parking generation analysis using the latest ITE Parking Generation manual or other approved method.
5. Public Transit and Non-Motorized Facilities
    a. Identification of existing transit service.
    b. Identification of existing trails, bicycle lanes, and other non-motorized facilities.
6. Future Conditions
    a. Annual growth rate determined by actual data or other approved source.
    b. Future conditions, with and without the project, with commentary on compliance with concurrency requirements as needed.
    c. Level of service calculations sheets at all impacted intersections and site access points, with and without the proposed project.
    d. Parking demand analysis.
    e. Effect of proposed development on public transit and non-motorized facilities.
    f. Any transportation facilities proposed by the Monroe Comprehensive Plan or adopted Transportation Improvement Plan which may affect the development.
7. Mitigation Measures
    a. All development activities in the City are subject to the Transportation Mitigation requirements of the MMC.
    b. Proposed mitigation to correct any deficiencies not addressed through the capital improvements identified in the latest Transportation Impact Fee Study.
    c. Dedication of right-of-way and associated frontage improvements.
    d. Evaluation of change in accident potential with proposals to correct safety deficiencies.
8. Other
    a. Analysis of internal site circulation for vehicles, transit, non-motorized users, and handicap access.
    b. Safe walk analysis—evaluation and coordination with the Monroe School District and the Public Works Department for providing safe walking conditions and routes for all new residential short plats, subdivisions, and commercial uses.

3.4 TRAFFIC CONTROL

3.4.1 Traffic Control Signage – Permanent

All permanent traffic control signing, striping and pavement marking for new development shall conform to the most current edition of the MUTCD and these standards. It shall be the developer's responsibility to furnish all materials and labor to install the traffic control features as shown on the approved permit construction plans.

Standard details 322 to 324 and 327 to 329 provide additional information and requirements.

3.4.2 Channelization Plans

All designs must be consistent with the MUTCD, AASHTO, WSDOT Design Manual, and the Monroe Standards. Plans must be prepared by a licensed engineer, registered in the state of Washington, with experience in preparation of channelization plans. A pre-design meeting may be required to identify key parameters of the design.

Standard Details 325 and 326 show typical lane configurations, and pavement markings. All new crosswalk installations must be thermoplastic or equal with supplemental signing as necessary. Mid-block crosswalks will require supplemental lighting or special treatment to maximize safety. Use of raised pavement markers supplemental to pavement lane striping may be required.

3.4.3 Traffic Signal Plans and Specifications

Traffic signal plans and specifications and other traffic control devices must be consistent and in conformance with regulations, policies, procedures, and specifications of the MUTCD, AASHTO, and WSDOT.

The Developer is responsible for securing any state and local permits needed for traffic signalization and regulatory signing and marking.

All signals must be equipped with preemption that is compatible with the equipment approved by the Fire District. New traffic signals installations must include a minimum of one spare conduit run for any arterial crossing.

Warrants for traffic signals must be consistent with the practices set forth in the MUTCD. The Public Works Director will determine consistency with these practices based on submitted information by the Developer when determining if a traffic signal is warranted and consistent with city planning.

Traffic signal interconnect to nearby affected signals may be required for any new traffic signal installation to promote progression of traffic and improved efficiency of the travel stream.

New mast arm street name signs must conform to Standard Detail 323.

3.5 SURVEYING AND MONUMENTATION

3.5.1 Description

This work consists of all the surveying and monumentation required to construct the project as described in the approved plans and the Monroe Standards.

All monumentation must comply with the requirements found in MMC 22.68.040. The Developer must furnish all materials and install monuments and castings in accordance with the approved plans. The monument disk must be furnished and installed by the Developer per Standard Detail 316.

Surveying, as required to construct a given project per the approved plans, must be furnished by the Developer at no expense to the City. It is required that, as a minimum, survey stakes be set for new curb and gutter construction, for both horizontal and vertical control corresponding to the City's current datum. Any water, storm drain, or sanitary sewer mains which are to be constructed in easements, are to have survey offset stakes set prior to starting work. Any deviation from that staked line must be left uncovered and re-surveyed to realign the easement as required and for as-built information.

Any project that impacts an existing monument must re-survey the monument after the work is completed so it can be used for horizontal and vertical control.

3.5.2 Materials

Materials for monumentation must conform to Standard Detail 317. The cover and seat must be machined so as to have perfect contact around the entire circumference and full width of bearing surface.

3.5.3 Construction

The Developer must provide the surveying required to establish or perpetuate land corner monumentation as may be required on the project. All surveying associated with final plat approvals for subdivisions or short subdivisions must comply with MMC 22.68.040(D)9.

All land corner surveying must conform to the requirements of RCW 58.09. If the Developer's surveyor replaces or restores an existing or obliterated General Land Office (GLO) corner, it is the Developer's responsibility to file Land Corner Records for these monuments with the County Auditor's Office. When all land corners have been established, replaced, or restored and monumented as described herein, the surveyor must certify this information with a letter to the Community Development Director and Public Works Director and transmit copies of any recorded surveys and documents. This certification letter must include the location of the monumented corner(s) and certify that all land corner(s) have been monumented as described herein.

The City reserves the right to check survey points and/or the correct locations and elevations of new construction. These spot-checks will not change the requirements for normal checking and testing as described elsewhere, and do not relieve the Developer of the responsibility of producing a finished product that is in accordance with the

approved plans. If errors are found due to errors or omissions by the Developer's survey activities, the Developer must correct the errors, including removing and replacing improvements, and pay all expenses, including the cost to re-survey.

The Developer's surveyor must provide the City with a copy of the recorded survey, survey notes, and a reproducible final drawing. If the survey was prepared on CADD, a disk of drawing must also be provided to the City.

3.6 STREET ILLUMINATION AND ELECTRICAL POWER

3.6.1 General

Street lighting systems must conform to the applicable portions of the APWA/WSDOT Standard Specifications Section 8-20 and the Illuminating Engineering Society (IES) manuals, except as modified by the City of Monroe herein.

Streetlights must be provided with the development of all new subdivisions, short plats, multifamily/townhome projects, planned unit developments, and for other commercial, industrial, or institutional property development. Streetlight poles on arterials must be aluminum or steel with a concrete base. On residential access streets, direct-buried fiberglass poles or better must be provided. The extent of lighting must include as a minimum, illumination of all affected frontage roads and internal roads, whether public or private, related to the development. Additional lighting beyond project limits may be required to address safe walk connections, as determined by the traffic impact analysis for the development.

Existing street lighting systems need not conform with the illumination standards contained herein.

3.6.1.1 Street Light Utility Maintenance

Streetlights located within Monroe will generally be owned and maintained by the Snohomish County PUD. The Developer is responsible for construction of streetlights and all accessories necessary to energize the streetlight system, which must be consistent with Monroe Standards. When feasible, all new streetlight wiring, conduit and service connections must be located underground. Other special luminaires, which are not consistent with Snohomish County PUD requirements, must be approved by the City. The installation and maintenance of special luminaires, not provided by Snohomish County PUD, is the responsibility of the Developer.

3.6.2 Design Standards

For all new streetlight installations, the Developer must coordinate with the Snohomish County PUD to prepare a street lighting plan for submittal to and approval by the Public Works Department.

All new developments must submit the lighting plan on a separate drawing to the City for review and approval.

3.7 ASPHALT, CONCRETE AND PAVEMENT PATCHING

3.7.1 Description

This work consists of asphalt concrete paving and the patching of various types of pavement cuts, the performance of which must be in accordance with the Monroe Standards, the current WSDOT/APWA Standard Specifications and Standard Detail 317.

3.7.2 Materials

All materials must conform to the requirements in the WSDOT/APWA Standard Specifications as follows:

1. Asphalt concrete pavement, including patching, must conform to hot mix asphalt meeting the requirements of 5-04, 9-02, and 9-03.
2. Paving asphalt must conform to Grade PG 58H-22.
3. Asphalt for a temporary patch must meet the requirements of 9-02.
4. Tack coat must be emulsified asphalt Grade CSS-1H or Performance Graded (PG) asphalt for tack coat as specified in 9-02.1(6).
5. Crack sealing must conform to asphalt rubber material.
6. Geotextile fabric for pavement reinforcement must be needle-punch non-woven 100 percent polypropylene. Products such as Petromat or Supac as manufactured by Phillips Fiber Corporation are acceptable. Other products may be submitted by the Developer for review as equal substitutions.
7. Asphaltic binder for use with geotextile fabric must conform to the manufacturer's recommendations for the fabric used. Cutback asphalts cannot be used with polypropylene fabrics due to reactions with solvents at high temperatures.
8. Crushed Surfacing Top and Base Courses must meet the requirements of 9-03.9.(3).
9. Cement concrete pavement patch must be Class 4000 meeting the requirements of 6-02.
10. Permeable pavement and pervious concrete pavement specifications have not yet been universally adopted by a broad cross-section of public and private agencies. Proposed permeable pavement and pervious concrete sections and materials will be reviewed on a case-by-case basis utilizing the most current best management practices at the time of submittal. The City reserves the right to make the final decision on all permeable pavement proposals on streets that will ultimately be owned and maintained by the City.

3.7.3 Construction Requirements

3.7.3.1 General

Signs, barricades, lights, and other warning devices must be installed per the requirements of the current MUTCD and must be maintained 24 hours a day until the roadway work is completed and ready for traffic.

The placing and compaction of the trench backfill and the preparation and compaction of the subgrade must be in accordance with the various applicable sections of the WSDOT/APWA Standard Specifications.

Compaction of the subgrade must be completed prior to the required asphalt work or patching as determined in the WSDOT Design Manual.

A minimum full-lane width, 2-inch minimum thickness grind and overlay is required for road widening or utility patches parallel to roadway. Up to full width, 2-inch minimum thickness overlay may be required for any road cutting or excavation. This additional pavement removal and replacement must extend a 5-foot minimum beyond trench edge. Transverse utility trenches must be restored with full road width Trench Cut patch (additional pavement removal and replacement) extending a 5-foot minimum beyond trench edge. On roads paved within the past 36 months, the patch will include a grind/overlay a minimum of 25' beyond the trench edge.

Pavement patching must be scheduled to accommodate the demands of traffic and must be performed as rapidly as possible to provide maximum safety and convenience to public traffic.

Before the pavement patch is constructed, the pavement must be saw cut or ground so that the marginal edges of the patch will form a rectangular shape with straight edges and vertical faces.

When required, cold patching along the edge of existing roadways and at interfaces with existing pavements must be completed to the widths and depths established in the approved plans, specifications, and Monroe Standards.

Geotextile fabric materials, when required in the approved plans, specifications, and Monroe Standards, must be placed and constructed according to the manufacturer's recommendations. Only developers experienced in the placement of the material shall perform the work. The Developer must review the project conditions, proposed placement methods, and equipment to be used with the City Inspector well in advance of the actual construction.

3.7.3.2 Asphalt Concrete on Granular Base

After the crushed surfacing course aggregate base has been leveled and compacted, asphalt treated bas or hot mix asphalt must be placed to the thickness indicated on the approved plans. Asphalt must be compacted to a minimum 91 percent of the reference maximum density as determined by AASHTO method T209 or current WSDOT Standards.

3.7.3.3 Temporary Pavement Patching

The Developer must furnish, place, and maintain temporary pavement patching, at locations as directed by the engineer, until such time as a permanent pavement patch can be made. Generally, the permanent patch must be completed within two weeks of the completion of trenching and road repairs.

A temporary pavement patch must consist of ½ HMA or approved cold mix paving product compacted to a firm and unyielding surface.

Temporary asphalt patching will be required where roadway or walk is needed for vehicular or pedestrian traffic during the construction period, until permanent pavement and sidewalks can be constructed.

In the event that the temporary surface subsides after the initial placement, additional asphalt or Crushed Surfacing must be applied to maintain the surface.

3.7.3.4 Cement Concrete Pavement Patching

Streets that have cement concrete pavements overlaid with asphalt concrete must be patched as shown on Standard Detail 317. After the Crushed Surfacing Top Course subgrade for the pavement has been constructed and compacted to line and grade, the cement concrete pavement patch must be placed and struck off to a thickness of 1 inch greater than the existing pavement or six (6) inch minimum, whichever is greater. All work must be in accordance with 5-05 of the WSDOT/APWA Standard Specifications, except as modified by the Monroe Standards.

The top surface of the concrete patch must match the top surface of the existing concrete base. In no case may the top of the concrete be higher than the top of the existing concrete base. Joints must be placed to match existing joints. Dowling of the new patch into the surrounding concrete may be required depending on patch size, location in the roadway, and other relevant factors.

Expansion joints and control joints must be placed to match existing joints. The surface of the concrete patch must be finished and brushed with a fiber brush to improve bonding with the asphalt overlay. Approved curing compound must be placed on the finished concrete immediately after finishing.

Asphalt concrete plant mix must not be placed until three days after the cement concrete base has been placed or 80% design strength verification provided by a licensed geotechnical laboratory. The asphalt concrete plant mix must not be placed until the concrete base has received a tack coat of CSS-1 at a rate of 0.12 to 0.20 gallons per square yard. The edges of the existing asphalt and castings must also be painted with the tack coat. The asphalt concrete pavement must then be placed, leveled, and compacted to conform to the surface of the existing asphalt pavement. Immediately thereafter, all joints between the new and original asphalt pavement must be painted with CSS-1, CCS-1H Emulsified Asphalt or Performance Graded (PG) Asphalt.

3.8 GUARDRAILS

Beam guardrails must be installed at locations determined during the project design and plan review process and as shown on the approved plans. Beam guardrails must conform to the current WSDOT Design Manual Chapter 1610.06. Project requirements for clear zone must conform to the current WSDOT Design Manual 1600.02(2). All plan submittals must include the current WSDOT Standard Plans specific to the project as noted in the current WSDOT Design Manual Chapter 1610.06. Alternative methods proposed by the Developer for providing roadway vehicle and pedestrian protection will be considered on a case-by-case basis.

3.9 MAILBOXES

New developments must provide mailboxes of the type, number, and at locations determined by the Monroe Postmaster and comply with clear zone location requirements within Section 3.2.1.6. The Developer must provide the Postmaster with two copies of the preliminary project site plans for use in establishing locations, types, and numbering of the mailboxes. The Postmaster will retain one copy and return the other redlined set to the Developer for use in preparing final plan.

1. In the case of new road construction or reconstruction requiring mailboxes to be relocated or rearranged, the Developer must coordinate through the Monroe Postmaster for acceptable mailbox locations and to ensure uninterrupted mail service. Approved locations for mailboxes must be shown on street construction plans.
2. For new construction where existing sidewalks are located adjacent to the curb, the sidewalk must be widened to provide an obstruction free clear width of not less than 5 feet, from back of mailbox structure to back of sidewalk per Standard Detail 320.

3.10 ROCKERIES AND ROCK WALLS

Concrete and structural retaining walls must be designed and constructed to meet the current adopted edition of the International Building Code. All retaining walls greater than 4’ in height as measured from the bottom of the foundation to the top of the wall must obtain a building permit.

3.10.1 Description

Work must be performed in accordance with these standards and Standard Detail 321. Any rockeries over 4 feet high, measured as exposed wall face excluding buried base course, must be designed by an engineer licensed in the state of Washington. Shorter walls with surcharging from slopes above the wall and/or building foundations near the wall may also require a permit and engineering design. Additional geotechnical analysis and recommendations may be required for design and construction inspection.

3.10.2 General

Surfaces accessible to pedestrians above and adjacent to rockeries over 30 inches high must be protected by a pedestrian guardrail conforming to the current International Building Code.

3.10.3 Materials

Rock for constructing new rock facings must be large broken pieces of igneous rock obtained from a commercial quarry. Rock material must be rectangular selected pieces or rock, sound and resistant to weathering. Rock must be free of soft, weathered material and seams of soft rock susceptible to deterioration.

Perforated drainpipe must be Schedule 40 machine-perforated PVC pipe. No. 2 Coarse Aggregate must conform to Section 9-03 of the WSDOT/APWA Standard Specifications.

Concrete for rockery cap must be Class 3000. Lamp black coloring agent to match the color of the rockery must be added to the cement concrete during mixing in an amount not to exceed 1½ pounds per cubic yard of concrete.

Quarry Rock must meet the requirements of Section 9-13.6 of the WSDOT/APWA Standard Specifications.

3.10.4 Construction Requirements

The first course of rock should be placed on undisturbed soil or compacted fill. There should be full contact between the rock and soil, which may require shaping of the ground surface or slamming or dropping the rocks into place so that the soil foundation conforms to the rock face bearing on it.

As the rockery is constructed, the rocks should be placed so that there are no continuous joint planes in either the vertical or lateral direction. Each rock should bear on at least two rocks below it. Rocks should be placed so that there is some bearing between flat rock faces rather than on joints. Joints between courses should slope downward towards the material being protected (away from the face of the rockery). Voids in the rockery face must not be greater than 50 square inches for rocks over 3 feet high and 36 square inches for rocks under 3 feet high. The maximum through void area will be 15 square inches over 3 feet high and 10 square inches under 3 feet high. Any large voids existing between each course of rock as it is placed must be filled by wedging smaller rock of the same quality into the voids in the back side of the rockery. Backfill material must not be allowed to spill freely between the voids in the rockery. The rockery must be backfilled in uniform layers as construction proceeds.

Backfill materials must be Quarry Rock per 3.14.3 of the Monroe Standards. No. 2 Coarse Aggregate per 9-03 must be used around the perforated drainpipe behind the rockery wall.

The density of rock material must be a minimum of 160 pounds per cubic foot. The size categories for rock must be as follows:

Table 2

Commercial Rock Size	Approx. Weight	Minimum Dimensions	Approx. Size Volume
One-man rock	160 to 400 lb.	12 inches	1.75 c.f.
Two-man rock	500 to 800 lb.	13 inches	4 c.f.
Three-man rock	900 to 1,200 lb.	16 inches	6.6 c.f.
Four-man rock	1,300 to 1,600 lb.	18 inches	9 c.f.

Rocks less than one (1) cubic foot in volume or weighing less than 160 pounds must not be used.

3.11 CEMENT CONCRETE SIDEWALKS

3.11.1 Description

3.11.1.1 General

This work must consist of constructing cement concrete sidewalks and curb ramps, including excavation for the depth of the sidewalk and subgrade preparation, in accordance with the Monroe Standards, the WSDOT/APWA Standard Specifications and Standard Details 309, 313, 314 and 315. Work must comply with ADA RCW 35.68.075-35.68.076.

3.11.2 Materials

Materials must meet the requirements of the following section of the WSDOT/APWA Standard Specifications:

Table 3

Material	Section
Portland Cement	9-01
Aggregates	9-03
Pre-Molded Joint Filler	9-04
Concrete Curing Materials and Admixtures	9-23
Pervious Concrete WSDOT/APWA General Special Provisions Division 5	

The use of Calcium Chloride as an admixture is prohibited.

3.11.3 Construction Requirements

3.11.3.1 General

The curb and gutter section must be placed prior to the placement of the sidewalk section.

Subgrade must be approved by the construction inspector prior to concrete placement. Expansion joints must be 1/2 inch wide by full depth and placed adjacent to structures within the sidewalk, such as foundations for mailbox structures, vault lids, etc. Control joints must be placed to match any joints in adjacent curbs and be at least ¼ the thickness of the concrete on 5-foot centers.

The sidewalk must provide a minimum obstruction free width of at least 5 feet. Mailboxes must be set at locations approved by the Postmaster and must provide a 2-foot clearance from the face of the curb. Refer to Section 3.9 and Detail 320.

Where there is insufficient suitable native material on the project site, the Developer must furnish, place and compact gravel borrow. All sidewalks must be constructed over a minimum 4 inches of crushed surfacing top course meeting the requirements of 9-03.9(3) of the WSDOT/APWA Standard Specifications compacted to 95 percent of maximum dry density.

3.11.3.2 Form and Fine Grading

Steel forms must be 4 inch wide by 10 feet long. If wood forms are used, the wood must be 2-inch x 4-inch (nominal) in lengths of not less than 10 feet. Forms must be staked to a true line and grade.

3.11.3.3 Placing and Finishing Concrete

The concrete must be spread uniformly between the forms and thoroughly compacted with a steel shod strike board. Expansion joints and control joints must be located and constructed in accordance with Standard Detail 309. In construction of expansion joints, the pre-molded joint filler must be adequately supported until the concrete is placed on both sides of the joint.

Whenever castings are located in the sidewalk area, joints must be installed at the casting location to control cracking of the sidewalk. If spacing of joints or scoring is such that installation of joint material would be unsuitable, the Developer must install rebar to strengthen the sidewalk section.

Control joints must be formed by first cutting a groove in the concrete with a tee bar of a depth equal to, but not greater than, the joint filler material and then working the pre-molded joint filler into the groove. Pre-molded joint filler for both expansion and control joints must be positioned in true alignment at right angles to the line of the sidewalk and be normal to and flush with the surface.

After the concrete has been thoroughly compacted and leveled, it must be floated with wood floats and finished at the proper time with a metal float. Joints must be edged with a ¼ inch radius edger and the sidewalk edges must be tooled with a ½ inch radius.

The surface must be brushed with a fiber hairbrush in a transverse direction except that at driveway and alley crossings, it must be brushed longitudinally.

.

3.11.3.4 Curing and Protection

The curing materials and procedures shall be as specified in 5-05.3(13) of the WSDOT/APWA Standard Specifications.

The Developer must have readily available sufficient protective covering, such as plastic sheeting, to cover the pour of an entire day in event of rain or other unsuitable weather.

The sidewalk must be protected against damage or defacement of any kind until it has been accepted by the construction inspector. Sidewalk which is not acceptable to the City because of damage or defacement must be removed and replaced by the Developer.

3.11.3.5 Curing and Hot Weather

In periods of low humidity, drying winds, or high temperatures, a fog spray must be applied to concrete as soon after placement as conditions warrant in order to prevent the formation of shrinkage cracks. The spray must be continued until conditions permit the application of a liquid curing membrane or other curing media.

3.11.3.6 Cold Weather Work

When the air temperature is expected to reach the freezing point during the day or night, the concrete must be protected from freezing. The Developer must provide a sufficient supply of straw, hay, grass, blankets, or other suitable blanketing material and spread it over the concrete to a sufficient depth to prevent freezing of the concrete. The Developer is responsible for the quality and strength of the cured concrete. All concrete damaged by frost action or freezing must be removed and replaced at the Developer's expense.

3.11.3.7 Curb Ramps

In accordance with state and federal law, curb ramps must be provided at all pedestrian crossings with curb sections. When a ramp is constructed giving handicap access to the roadway area, a corresponding ramp at the opposite side of the roadway must also be provided that meets current ADA requirements. Exact locations at each curb return will be as shown in the approved plans.

Curb ramps must be constructed in accordance with Standard Details 313, 314, and 315 and as shown on the approved plans. This work must include curb ramps installed in new sidewalks and in existing sidewalks. Existing sidewalks must be neatly saw-cut full depth prior to construction of curb ramps.

Curb ramps must not be poured integral with the sidewalk. Curb and gutter must be isolated by expansion joint material on all sides. Ramp texture must have a horizontal broom finish as shown on Standard Details referenced above.

3.12 CURB AND GUTTER SECTIONS

3.12.1 Description

The standard curb and gutter section must be a vertical curb and gutter per Standard Detail 305. Vertical curb and gutter must be used on all public and some very low traffic volume private roadways. Refer to Standard Detail 300 for additional information.

3.12.2 Materials

Materials must meet the requirements of the following Sections of the WSDOT/APWA Standard Specifications:

Table 4

Material	Section
Portland Cement	9-01
Concrete Aggregate	9-03
Reinforcing Steel	9-07
Pre-Molded Joint Filler	9-04
Curing Compound	9-23

The Portland Cement concrete must meet the requirements of Section 5-05 of the WSDOT/APWA Standard Specifications. Concrete mix for curbs must be Class 3000. Slump of the concrete must not exceed 3 ½ inches.

All new curb and gutter must be placed over not less than 3 inches of crushed surfacing top course or bottom course compacted to 95 percent maximum dry density.

Forms may be of wood or metal at the option of the developer, provided that the forms as set will result in a curb or curb and gutter of the specified thickness, cross section, grade, and alignment shown on the approved plans.

3.12.3 Placing Concrete

The subgrade must be properly compacted and brought to specified grade before placing concrete. The subgrade must be thoroughly dampened immediately prior to the placement of concrete. No new curb and gutter is to be placed until the construction inspector has checked and approved the forms for line, grade and compaction. Concrete must be spaded and tamped thoroughly into the forms to provide a dense, compacted concrete, free of rock pockets. The exposed surfaces must be floated, finished, and brushed longitudinally with a fiber hairbrush approved by the construction inspector.

The rate of concrete placement must not exceed the rate at which the various placing and finishing operations can be performed in accordance with the Monroe Standards.

If concrete is to be placed by the extruded method, the Developer must demonstrate, to the satisfaction of the construction inspector, that the machine is capable of placing a dense, uniformly compacted concrete to exact section, line, and grade.

3.12.4 Curing and Protection

Transparent curing compounds must be applied to all exposed surfaces immediately after finishing. Transparent curing compounds must contain a color dye of sufficient strength to render the film distinctly visible on the concrete for a minimum period of four hours after application.

The Developer must have readily available sufficient protective covering, such as plastic sheeting, to cover the pour of an entire day in event of rain or other unsuitable weather.

The curb must be protected against damage or defacement of any kind until it has been accepted by the construction inspector. Curb and gutter which is not acceptable to the construction inspector because of damage or defacement must be removed and replaced by the Developer at their own expense.

The curing materials and procedures shall be as specified in 5-05.3(13) of the WSDOT/APWA Standard Specifications, except that white pigment curing compounds must not be used on sidewalks.

3.13 CEMENT CONCRETE DRIVEWAY

3.13.1 Description

This work consists of cement concrete driveway and alley returns constructed at the locations shown on the approved plans and where directed by the construction inspector, and must be in accordance with the Monroe Standards, the WSDOT/APWA Standard Specifications, and Standard Details 310, 311 and 312. See 3.2.2.4 for additional conditions for driveways.

3.13.2 Materials

Materials must meet the requirements of the following sections of WSDOT/APWA Standard Specifications:

Table 5

Material	Section
Portland Cement	9-01
Fine Aggregate	9-03
Coarse Aggregate	9-03
Joint Materials	9-04
Curing and Admixtures	9-23
Pervious Concrete WSDOT/APWA General Special Provisions Division 5	

The concrete mix must be as specified for Class 4000 and the slump of the concrete must not exceed 3 inches.

3.13.3 Construction Requirements

1. General
    a. No driveway approach may project beyond the extension of the side property line to the curb, unless the owner of the adjacent property is a co-signer of the driveway permit.
    b. There must be at least 20 feet of full height curb between driveways serving any one property frontage.
    c. There must be at least 6 feet of full height curb between driveways on adjacent lots.
    d. Driveway aprons must be constructed per Standard Details 310, 311 or 312, as applicable. The minimum thickness of the driveway apron must be 6 inches, placed over a minimum of 4 inches of crushed surfacing top course compacted to 95 percent maximum dry density over a compacted subgrade. In all cases, subgrade and rock grade must be approved by the construction inspector prior to concrete being placed. Driveway aprons over 15 feet wide must have an expansion joint placed in the center of the apron.
    e. In locations where a new driveway is to be constructed and sidewalk, curb, and gutter is already existing, it must be totally removed and replaced to driveway standards. It is not permissible to knock off existing curb and install driveway apron. The total curb and gutter section must be removed, either by sawcutting or to the nearest expansion joint, and replaced to driveway standards.
    f. New driveways installed in areas where curb and gutter improvements are not existing, and not required, must be paved from the existing edge of pavement to the property line, regardless of whether the remainder of the driveway on the private property is paved.
    g. In areas not fully improved with curbs and sidewalks, the elevation of the driveway at the point where it crosses the property line must not be more than 3 inches higher than the elevation of the centerline of the existing paved street, if the driveway is rising on the private property side, and no lower than level with the elevation of the centerline of the existing street, if the driveway is sloping down on the private property side.
    h. Driveways that cross bike/pedestrian trails must be designed to safely accommodate both the vehicles and the trail users. Any ramp in the trail must meet the current ADA design standards.
2. Excavation and Subgrade

a. Unsuitable material in the subgrade must be removed and replaced with select material such as gravel borrow conforming to 3.14.2 , CSTC or CSBC and properly compacted to specifications.

b. Before any concrete is placed, the Developer must bring the subgrade to the required line, grade, and cross-section. The Developer must maintain the subgrade in the required condition until the concrete is placed. Compaction must be to 95 percent standard density.

3. Forms and Fine Grading

   a. Forms for the straight sections of the driveway or alley return must have a minimum nominal thickness of two (2) inches and be equal to the nominal depth of the concrete. Plywood or one (1) inch lumber may be used on radii. All forms must be securely staked and blocked to true line and grade.

   b. A template must be set upon the forms and the subgrade must be fine graded to conform to the required section. The subgrade must then be compacted to the approval of the construction inspector. Prior to placement of the concrete, the subgrade must be thoroughly dampened.

4. Placing and Finishing

   a. The concrete must be spread uniformly between the forms and thoroughly compacted with an approved type of strikeboard. Expansion joints and contraction joints must be located and constructed in accordance with Standard Detail 310, 311, or 312, whichever applies. In the construction of expansion joints, the pre-molded joint filler must be adequately supported until the concrete is placed on both sides of the joint.

   b. Contraction joints (control joints) must be formed with a tee bar by first cutting a groove in the concrete to a depth equal to, but not greater than the joint filler material and then working the pre-molded joint filler into the groove. Pre-molded joint filler for both expansion and control joints must be positioned in true alignment and at right angles to the centerline of the driveway or alley return.

   c. After the concrete has been thoroughly compacted and leveled, it must be floated with wood floats and finished at the proper time with a metal float. Joints must be edged with ¼ inch radius edger and the driveway or alley return edges must be tooled with ½ inch radius edger with 4-inch flashing.

   d. The surface must be brushed in a transverse direction in relation to the centerline of the driveway or alley return with a fiber hairbrush of a type approved by the construction inspector.

5. Curing and Protection

   a. The curing materials and procedures specified in Sections 5-05 and 9-23 of the WSDOT/APWA Standard Specifications and 3.12.4 of the Monroe Standards must be used. The driveway and the alley return must be protected against damage or defacement of any kind until acceptance by the construction

inspector. Any driveway or alley return not acceptable, in the opinion of the construction inspector because of damage or defacement, must be removed and be replaced by the Developer.

b. Before placing any concrete, the Developer must have on the job site enough protective paper to cover the pour of an entire day, in event of rain or other unsuitable weather conditions.

3.14 PROPORTIONING OF MATERIALS

3.14.1 Controlled Density Fill (CDF)

CDF must conform to the requirements of Section 2-09.3(1)E of the WSDOT/APWA Standard Specifications but must have a 28-day design compressive strength of between 50 PSI and 100 PSI.

3.14.2 Gravel Borrow

The gradation for gravel borrow must conform to the requirements of Section 9-03.14(1) of the WSDOT/APWA Standard Specifications.

3.14.3 Quarry Rock

Quarry Rock must meet the requirements of Section 9-13.6 of the WSDOT/APWA Standard Specifications. All percentages are by weight.

3.14.4 Non-Shrink grout

Non-shrink grout must meet the requirements of Section 9-20.3(2) of the WSDOT/APWA Standard Specifications. The grout must be covered with burlap sacks after the initial concrete set and wetted at regular intervals until the required strength is obtained.

3.15 PARKING

3.15.1 General

Off street parking lots must be designed in conformance with MMC 22.44.130 OFF-STREET PARKING AREA DESIGN STANDARDS and constructed in conformance with MMC 22.44.150 OFF-STREET PARKING CONSTRUCTION STANDARDS.

3.15.2 Construction

The City construction inspector must inspect all parking lot construction for conformance to approved plans for size, layout, drainage control, and structural section.

The minimum acceptable structural section for parking lots must be 3 inches of HMA placed over 4 inches of crushed surfacing top course, or Permeable HMA in accordance with WSDOT Local Agencies GSPs – Divisions 2-9. The City will consider alternative pavement sections as long as an equivalent structural strength (SN value) is provided. Heavier pavement sections may be required for truck traffic, vehicle storage, or as determined by the Developer's soils engineer due to soil conditions.

Prior to placing any surfacing material on the parking lot, the Developer must provide density test reports of the subgrade certified by a professional engineer or testing laboratory registered in the state of Washington.

Crushed surfacing top course must be compacted to 95 percent maximum density. Density testing for asphalt pavement, including the necessity and frequency of core samples, will be determined by the City construction inspector on a case by case basis.

3.15.3 Parking Lot Illumination

Illumination must be provided for parking lots having more than 10 parking spaces, and must:

1. Provide adequate illumination for security and safety to all parking spaces, pedestrian walkways, and sidewalks. Driveway entries and exits should have special illumination and signage, where necessary. Pedestrian scale lighting may be required to illuminate pedestrian trails, paths, and walkways.
2. Be shielded in a manner that does not disturb residential uses.

3.16 STREET TREES AND LANDSCAPING

Landscaping must conform to MMC 22.46 LANDSCAPING STANDARDS.

3.16.1 Purpose

The purpose and intent of this section is to provide a list of approved street trees and a list of approved landscape buffer shrubs and ground cover for landscape development and buffering areas. Density and other requirements can be found in MMC 44.46.

3.16.2 Implementation

The Developer may use plant materials on the adopted plant lists or may use other plant materials, as approved by the Community Development Department. The City may require the Developer to modify a plant choice to provide:

1. Desired diversity of species.
2. Plantings more in scale and comparable with the uses in the immediate vicinity of the property.
3. Plant materials that will fulfill the buffering or landscaping purpose on a year-around basis.

The City may require additional landscaping where it is deemed necessary to screen or buffer the development from its surroundings, or to comply with the spirit of the landscape zoning code.

Trees planted within the public right-of-way shall include root barrier installation. The barrier shall be centered at the tree and generally be 2 feet longer than the predicted mature dripline of the tree specimen. Install the barrier 18 inches deep along the sidewalk edge and 24 inches deep along the back of curb.

3.16.3 Street Tree List

Small Trees less than 20' spread									
Common Name	**Scientific Name**	**Cultivar**	**Height**	**Width**	**Shape**	**Features/ Considerations**	**Drought Tolerant**	**Overhead Utilities**	**Soil Type**
Trident Maple	*Acer buerqeranum*		25	20	round	red in fall			all
Rocky Mountain Glow Maple	*Acer grandidentatum*	Schmidt	25	15	oval	orange/red in fall	X	X	well drained
Flame Maple	*Acer ginnala*	Flame	20	20	low branching	hardy/available; orange/red in fall		X	all
Rocky Mountain Maple	*Acer glabrum*		25	15	oval	deep lobed leaves; orange/red in fall; red twigs		X	well drained
Paperbark Maple	*Acer griseum*		25	20	upright/ round	peeling brown bark; red in fall		X	all
Autumn Brilliance Serviceberry	*Amelanchier x grandiflora*	Autumn Brilliance	20	15	upright/ spreading	white flowers, edible fruit; red in fall		X	all
Cole's Select Serviceberry	*Amelanchier x grandiflora*	Cole	20	15	rounded	red in fall		X	all
Princess Diana Serviceberry	*Amelanchier x grandiflora*	Princess Diana	25	15	gracefully spreading	white flowers, edible fruit		X	all
Japanese Dogwood	*Cornus kousa*		20	20	horizontal	large white flowers; red in fall		X	well drained
Carnelian Cherry Dogwood	*Cornus mas*		25	20	oval/ rounded	yellow flowers; red in fall		X	all
Crimson Cloud Hawthorn	*Crataegus laevigata*	Crimson Cloud	25	18	shrubby / round	red flowers, fruit with star-shaped area in center	X	X	all
Snowbird Hawthorn	*Crataegus mordenensis*	Snowbird	22	20	upright oval	double white flowers		X	all
Washington Hawthorn	*Crataegus phaenopyrum*		25	20	oval/ rounded	white flowers, red fruit; orange/red in fall	X	X	all
Lavalle Hawthorn	*Crataegus x lavallei*		28	20	irregular /vase	white flowers, orange fruit	X	X	all
Carolina Silverbells	*Halesia carolina*		30	20	broadly/ pyramidal	white/bell flowers		X	well drained

Small Trees less than 20' spread									
Amur Maackia	*Maackia amurensis*		25	20	vase	white flower clusters	X	X	all
Victoria Magnolia	*Magnolia grandiflora*	Victoria	20	20	pyramidal	creamy flowers, non -windy site	X	X	well drained
Adirondack Crabapple	*Malus spp.*	Adirondack	18	10	columnar	white/pink flowers, red/orange fruit	X	X	all
Red Jewel Crabapple	*Malus spp.*	Jewelcole	15	12	rounded	white flowers, red fruit until mid-Dec	X	X	all
Centurion Crabapple	*Malus spp.*	Centzam	20	15	narrow	red flower; purple bronze leaves	X	X	all
Golden Raindrops	*Malus spp.*	Golden Raindrops	20	15	vase	deep cut leaves; golden fruit	X	X	all
Sugar Tyme Crabapple	*Malus spp.*	Sutyzam	18	15	oval	pink buds, white flower	X	X	all
Sentinel Crabapple	*Malus spp.*	Sentinel	20	12	columnar	pale pink flowers	X	X	all
Tschonoskii Crabapple	*Malus tschonoskii*		28	14	narrowly oval	white flowers, greenish fruit	X	X	all
Sourwood	*Oxydendrum arboreum*		20	15	rounded	white bell clusters; orange in fall		X	well drained, acidic
Persian Parrotia	*Parrotia persica*		30	20	rounded	early flowers; mix of fall color			well drained
Krauter Vesuvius Plum	*Prunus cerasifera*	Krauter Vesuvius	20	15	upright	light pink flowers; tolerates heat; purple leaves	X	X	all
Summer Glow Bird Cherry	*Prunus padus*	Summer Glow	25	20	oval/ round	white flowers; purple leaves		X	all
Capital Pear	*Pyrus calleryana*	Capital	35	12	columnar	white flowers; red in fall	X		all
Chanticleer Pear	*Pyrus calleryana*	Chanticleer	40	15	pyramidal	white flowers; red in fall	X		all
Fragrant Snowbell	*Styrax obassia*		25	15	oval	fragrant flowers in summer	X	X	all
Ivory Silk Japanese Tree Lilac	*Syringa reticulata*	Ivory Silk	20	15	upright/ rounded	creamy panicles, heavy flowering		X	well drained

Medium Trees (20'·30' Canopy Spread +/-)									
Common Name	**Scientific Name**	**Cultivar**	**Height**	**Width**	**Shape**	**Features/ Considerations**	**Drought Tolerant**	**Overhead Utilities**	**Soil Type**
Columnar Norway Maple	*Acer platanoides*	Columnar	35	15	narrow	column of green foliage; yellow in fall	X		all
Crimson Sentry Maple	*Acer platanoides*	Crimson Sentry	25	15	oval	purple leaves maroon in fall	X	X	all
Globe Norway Maple	*Acer platanoides*	Globosum	15	18	dense/ globe	yellow in fall		X	all
Armstrong Maple	*Acer rubrum*	Armstrong	45	15	narrow	fast growing; yellow orange in fall			all
Bowhall Maple	*Acer rubrum*	Bowhall	40	15	narrow	great fall color			all
Goldspire Sugar Maple	Acer *saccharum*	Goldspire	45	15	columnar	yellow in fall			all
American Hornbeam	*Carpinus caroliniana*		25	20	oval	smooth gray trunk; yellow to orange in fall		X	all
European Hornbeam	*Carpinus betulus*	Fastigiata	35	25	upright/ oval	catkins turn brown in November; yellow in fall	X		all
Japanese Hornbeam	*Carpinus japonicus*		30	25	rounded/ vase	white/yellow flowers; red in fall	X		all
Eastern Redbud	*Cercis canadensis*		35	25	horizontal	purple-pink flowers; yellow in fall			all
Dawyck Purple Beech	*Fagus sylvatica*	Dawyck Purple	40	12	columnar	purple leaves			all
Dawyck Pyramidal Beech	*Fagus sylvatica*	Dawyck Pyramid Beech	45	20	columnar	purple leaves			all
Flowering Ash	*Fraxinus ornus*		30	15	pyramidal/ round	yellow in fall	X		all
Raywood Ash	*Fraxinus oxycarpa*	Raywood	35	25	oval	fast grower; purple fall color			all
Summit Ash	*Fraxinus pennsylvanica*	Summit	45	25	narrowly oval	yellow in fall	X		all
Princeton Sentry Ginkgo	*Ginkgo biloba*	Princeton Sentry	40	15	columnar	seedless male; yellow in fall	X		all

Medium Trees (20'·30' Canopy Spread +/-)									
Indian Summer Crabapple	*Malus spp.*	Indian Summer	18	20	rounded	red flower; wide	X	X	all
Prairifire Crabapple	*Malus spp.*	Prairifire	20	20	upright/ rounded	pinkish/red buds, flowers; dark red-purple fruit wide	X	X	all
Snowdrift Crabapple	*Malus spp.*	Snowdrift	20	20	spreading/ round	white flowers, orange fruit	X	X	all
Sour Gum/Black Tupelo	*Nyssa sylvatica*		35	20	pyramidal	red yellow in fall			all
European Hophombeam	*Ostrya carpinifolia*		40	25	rounded	nutlets in hop-like bunches	X		all
European Bird Cherry	*Prunus padus*		30	25	round	white flowers in long clusters			all
Canada Red Chokecherry	*Prunus virginiana*	Canada Red	25	22	rounded	unusual bark; purple leaves; red in fall			all
Spire Cherry	*Prunus x hillieri*	Spire	30	10	dense	soft pink flowers; orange/red in fall			all
Redspire Pear	*Pyrus calleryana*	Redspire	35	25	pyramidal	white flowers; red in fall	X		all
Common Oak	*Quercus robur*	Fastigata	45	15	narrow	yellow/brown in fall	X		well drained, acidic
Japanese Stewartia	*Stewartia pseudocamellia*		30	20	pyramidal /oval	white flowers; peeling bark; yellow red/purple in fall			moist acidic

Large Trees more than 30' spread									
Common Name	**Scientific Name**	**Cultivar**	**Height**	**Width**	**Shape**	**Features/ Considerations**	**Drought Tolerant**	**Overhead Utilities**	**Soil Type**
Hedge Maple	Acer campestre	Queen Elizabeth	30	30	rounded	low maintenance; yellow in fall	X		all
State Street Manie	*Acer miyabei*	Morton	45	30	rounded	red in fall			all
Japanese Maple	*Acer palmatum*		25	30	horizontal	fine-textured leaves;		X	well drained

Large Trees more than 30' spread									
						orange/red in fall			
Cleveland Maple	*Acer platanoides*	Cleveland	40	30	oval/ dense	yellow in fall			all
Crimson King Maple	*Acer platanoides*	Crimson King	40	35	oval/ rounded	purple leaves; reddish bronze in fall			all
Deborah Maple	*Acer platanoides*	Deborah	45	40	oval/ rounded	dark bronze green leaves; bronze in fall			all
Summershade Maple	*Acer platanoides*	Summershade	42	40	broad/ rounded	fast growing; yellow in fall			all
Spaethii Maple	*Acer pseudoplatanus*	Atropurpureum	40	30	oval/ upright	salt tolerant; green/purple leaves			all
Red Sunset Maple	*Acer rubrum*	Franksred	45	35	upright/ oval	vigorous/symmetrical; orange/red in fall	X		all
October Glory Maple	*Acer rubrum*	October Glory	40	35	oval/ round	reddish purple in fall			all
Schlesinger Maple	*Acer rubrum*	Schlesingeri	45	35	vase shaped	orange/red in fall			all
Green Mountain Sugar Maple	*Acer saccharum*	Green Mountain	45	35	oval	hardiest Sugar Maple; orange/red fall color	X		all
Jacquemontii Birch	*Betula jacquemontii*		40	30	upright/ oval	yellow in fall			all
River Birch	*Betula nigra*		40	35	pyramidal/ rounded	yellow in fall			all
Katsura Tree	*Cercidiphyllum japonicum*		40	40	pyramidal/ rounded	heart shaped leaves; red orange in fall			all
Yellowwood	*Cladrastis kentukea*		30	40	round	fragrant summer flowers; yellow in fall	X		all
Dove Tree	*Davidia involucrata*		35	30	broad pyramidal	white bracts	X		well drained
Rosehill Ash	*Fraxinus americana*	Rosehill	50	35	upright/oval	strong leader; red/purple in fall	X		all

Large Trees more than 30' spread									
Marshall Ash	*Fraxinus pennsylvanica*	Marshall	50	40	broadly oval	tough/adaptable; yellow in fall	X		all
Shademaster Honeylocust	*Gleditsia triacanthos*	Shademaster	45	35	vase shaped	upright branching; yellow in fall	X		all
Skyline Honeylocust	*Gleditsia triacanthos*	Skycole	45	35	broadly pyramidal	tolerant of pollution; golden in fall	X		all
Goldenrain Tree	*Koelreuteria paniculata*		30	30	rounded	yellow clusters	X	X	all
Tulip Tree	*Liriodendron tulipifera*		60	30	oval	yellow flowers; yellow in fall			all
Macho Cork Tree	*Phellodendron amurense*	Macho	40	30	vase shaped	seedless; yellow in fall			all
Sagent Cherry	*Prunus sargentii*	Columnaris	30	30	upright	single pink flowers; purple-black fruit in July; red in fall		X	all
Kwanzan Cherry	*Prunus serrulata*	Kwanzan	30	25	vase/ rounded	pink/double; hardiest Prunus serrulata; orange in fall			
Mount Fuji Flowering Cherry	*Prunus serrulata*	Shirotae	15	20	spreading	fragrant flowers, white/pink buds, red fruit		X	all
Akebono Cherry	*Prunus x yedoensis*	Akebono	25	30	upright	delicate pink flowers; yellow in fall		X	all
Aristocrat Pear	*Pyrus calleryana*	Aristocrat	40	30	pyramidal	open formal appearance; red in fall			all
Scarlet Oak	*Quercus coccinea*		50	40	upright/ oval	red in fall	X		all
Pin Oak	*Quercus palustris*		55	40	pyramidal	strong leader; retains leaves in winter; orange/red in fall	X		well drained acidic
English Oak	*Quercus robur*		50	40	broadly /rounded	yellow/ brown in fall	X		well drained
Shumard Oak/Texas Red Oak	*Quercus shumardii*		50	40	upright/ oval	red in fall	X		well drained acidic

Large Trees more than 30' spread									
Crimean Linden	*Tilia x euchlora*		40	35	pyramidal/ oval	golden green twigs; yellow in fall			all
Village Green Zelkova	*Zelkova serrata*	Village Green	40	38	vase shaped	clean appearance; red in fall			all

3.16.4 Wetland Plants

Native wetland plants are preferred for wetland areas. Plant materials as identified by Ecology and the Washington State Department of Fish & Wildlife must be used. Invasive species such as Purple Loose Strife or Reed Canary Grass are not allowed.

3.17 STANDARD STREET DRAWINGS

Drawing #	Description
300	Roadway Functional Classifications
301	Typical Roadway Section
301H	Road Section (Half)
302	Crowned Private Road Development
303	Private Road Short Section (Short Plat)
303A	Inverted Private Road Section
303B	Alley
304	Cul-De-Sac
305	Concrete Curb and Gutter
306	Cement Concrete Curbs
307	Extruded Concrete Cement Curb
308	Thickened Asphalt Edge Sections
309	Cement Concrete Sidewalk
310	Cement Concrete Driveway Type I
311	Cement Concrete Driveway Type II
312	Cement Concrete Driveway Type III
313	Curb Ramp Type I
314	Curb Ramp Type II
315	Curb Ramp Locations
316	Survey Monument
317	Pavement Patch
318	Zone of Influence
318A	Pavement Restoration
319	Residential Mailbox
320	NDCBU Mailbox Cluster
321	Rockery
322	Street Sign Mounting
323	Street Sign
323PR	Private Road Sign
324	Sign Installation
325	Stop Bar and Crosswalk
326	Left Turn Pocket
327	Road End Sign
328	No Parking Sign
329	Permissive Parking Sign
330	Bollard
331	Sight Lines Controlled Intersection
332	Sight Lines Uncontrolled Intersection
333	Sight Lines Driveway

	PRIVATE ACCESS IN FULL PLAT	SHORT PLAT PRIVATE ROAD	PRIVATE ROAD IN INFILL AREA	LOCAL STREET	COLLECTOR STREET	ARTERIAL STREET
MAXIMUM DWELLING UNITS	4	9	30	N/A	N/A	N/A
MINIMUM ROW/TRACT WIDTH	25'	35'	35'	52'	64'	80'
MINIUM PAVEMENT WIDTH (NOT INCLUDING GUTTERS)	20'	20'	20'	20'	32'	34'
MAXIMUM CENTERLINE LENGTH	150'	600'	600'	N/A	N/A	N/A
CURB AND GUTTER	REQUIRED	REQUIRED	REQUIRED	REQUIRED	REQUIRED	REQUIRED
SIDEWALKS	REQUIRED	REQUIRED	REQUIRED	REQUIRED	REQUIRED	REQUIRED
PARKING (PER SIDE)	ADD 8'	ADD 8'	ADD 8'	ADD 8'	ADD 10'	ADD 12'
BICYCLE LANE	NO	NO	NO	NO	YES	YES
STANDARD DETAIL REFERENCE	303	302	302	301	301	301
MAXIMUM LONGITUDINAL GRADE	15%	15%	12%	12%	12%	9%

NOTES

1. ALL PUBLIC ROADS REQUIRE A CUL-DE-SAC AT TEMPORARY AND PERMANENT DEAD ENDS IF STREET LENGTH EXCEEDS 150'.
2. SHORT PLAT PRIVATE ROADS OVER 150' LONG MUST HAVE AN EMERGENCY TURN AROUND OR CUL-DE-SAC. SEE STANDARD DETAIL 304.
3. DEVELOPMENTS WITH MORE THAN 30 DWELLING UNITS MUST HAVE TWO POINTS OF ACCESS AS DEFINED IN SECTION 3.4.2.1(12) OF THESE STANDARDS.

MONROE WASHINGTON

DESCRIPTION

ROADWAY FUNCTIONAL CLASSIFICATIONS

DESIGNATION

300

SCALE

NOT TO SCALE

REVISED

FEB 1, 2024

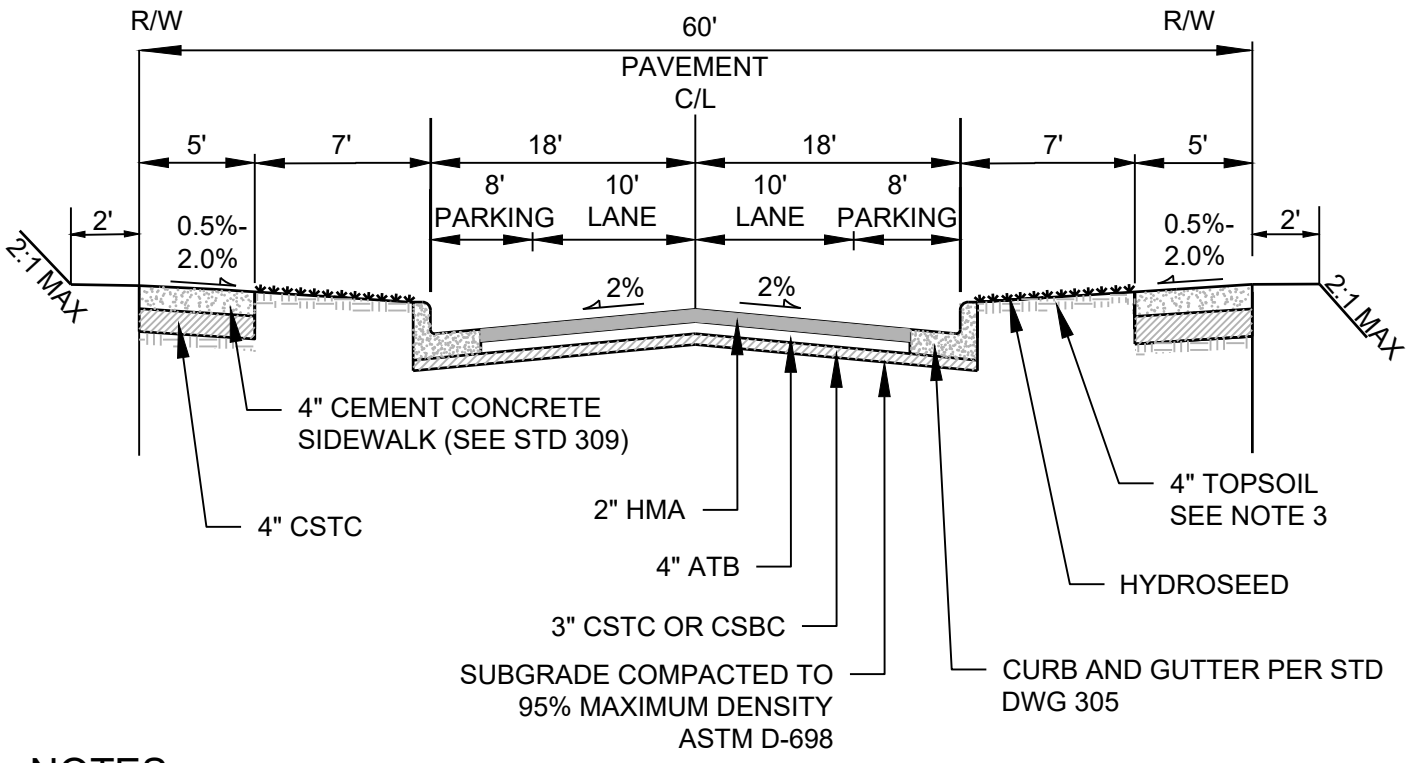

NOTES

1. COMPACTION TESTS ON SUBGRADE ARE REQUIRED. THE NUMBER OF TESTS SHALL BE AT THE DISCRETION OF THE CITY INSPECTOR. ALL TESTING SHALL BE THROUGH A LICENSED TESTING LABORATORY. THE MINIMUM COMPACTION SHALL BE 95% OF MAXIMUM DENSITY, ASTM D-698.
2. THE CITY ENGINEER MAY REQUIRE THE FINAL 2" LIFT OF HMA TO BE BONDED AND DELAYED FOR UP TO TWO YEARS OR PLAT BUILD OUT, WHICHEVER IS LONGER. ALL UTILITY CASTINGS (MANHOLE COVERS, VALVE BOXES, ETC.) MUST REMAIN AT GRADE UNTIL FINAL PAVING. PRIOR TO FINAL LIFT ALL ATB (SUB PAVING LIFT) DEFICIENCIES MUST BE REPAIRED TO THE SATISFACTION OF THE CITY.
3. TOPSOIL SHALL BE COMPRISED OF A THREE WAY BLEND CONTAINING 5% MINIMUM ORGANIC CONTENT AND A CARBON TO NITROGEN RATION OF AT LEAST 25:1.
4. PAVEMENT DESIGN ALTERNATIVES MAY BE CONSIDERED SUBJECT TO APPROVAL BY THE CITY ENGINEER. THE MINIMUM PAVEMENT STRUCTURAL NUMBER (SN) SHALL BE BASED ON THE ROADWAY CLASSIFICATION AS FOLLOWS:
   - 4.1. SN = 2.67 FOR PRIVATE, LOCAL, AND COLLECTOR ROADS
   - 4.2. ARTERIALS REQUIRE A SPECIFIC DESIGN

MONROE WASHINGTON

DESCRIPTION

TYPICAL ROADWAY SECTION

DESIGNATION

301

SCALE

NOT TO SCALE

REVISED

FEB 1, 2024

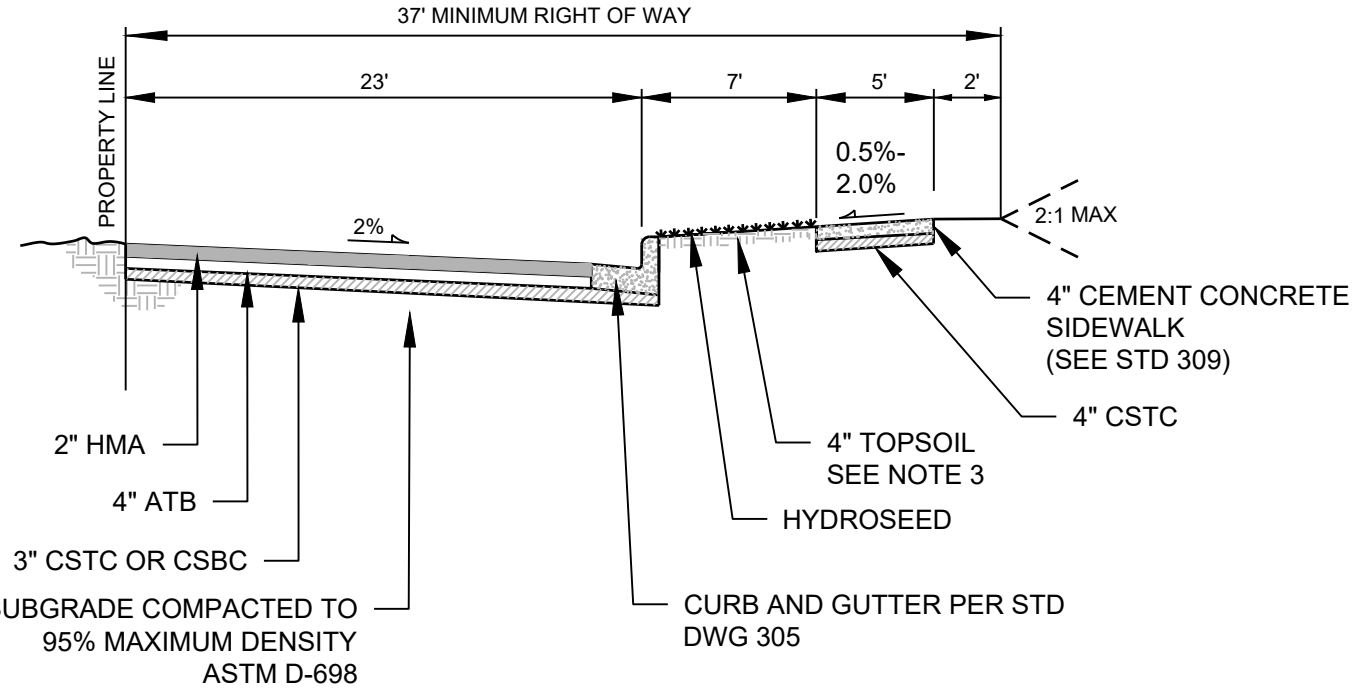

NOTES

1. COMPACTION TESTS ON SUBGRADE ARE REQUIRED. THE NUMBER OF TESTS SHALL BE AT THE DISCRETION OF THE CITY INSPECTOR. ALL TESTING SHALL BE THROUGH A LICENSED TESTING LABORATORY. THE MINIMUM COMPACTION SHALL BE 95% OF MAXIMUM DENSITY, ASTM D-698.
2. THE CITY ENGINEER MAY REQUIRE THE FINAL 2" LIFT OF HMA TO BE BONDED AND DELAYED FOR UP TO TWO YEARS. ALL UTILITY CASTINGS (MANHOLE COVERS, VALVE BOXES, ETC.) MUST REMAIN AT GRADE UNTIL FINAL PAVING. PRIOR TO FINAL LIFT ALL ATB (SUB PAVING LIFT) DEFICIENCIES MUST BE REPAIRED TO THE SATISFACTION OF THE CITY.
3. TOPSOIL SHALL BE COMPRISED OF A THREE WAY BLEND CONTAINING 5% MINIMUM ORGANIC CONTENT AND A CARBON TO NITROGEN RATION OF AT LEAST 25:1.
4. PAVEMENT DESIGN ALTERNATIVES MAY BE CONSIDERED SUBJECT TO APPROVAL BY THE CITY ENGINEER. THE MINIMUM PAVEMENT STRUCTURAL NUMBER (SN) SHALL BE BASED ON THE ROADWAY CLASSIFICATION AS FOLLOWS:
   - 4.1. SN = 2.67 FOR PRIVATE, LOCAL, AND COLLECTOR ROADS
   - 4.2. ARTERIALS REQUIRE A SPECIFIC DESIGN

MONROE WASHINGTON	DESCRIPTION: ROAD SECTION (HALF)	DESIGNATION: 301H
	SCALE: NOT TO SCALE	REVISED: FEB 1, 2024

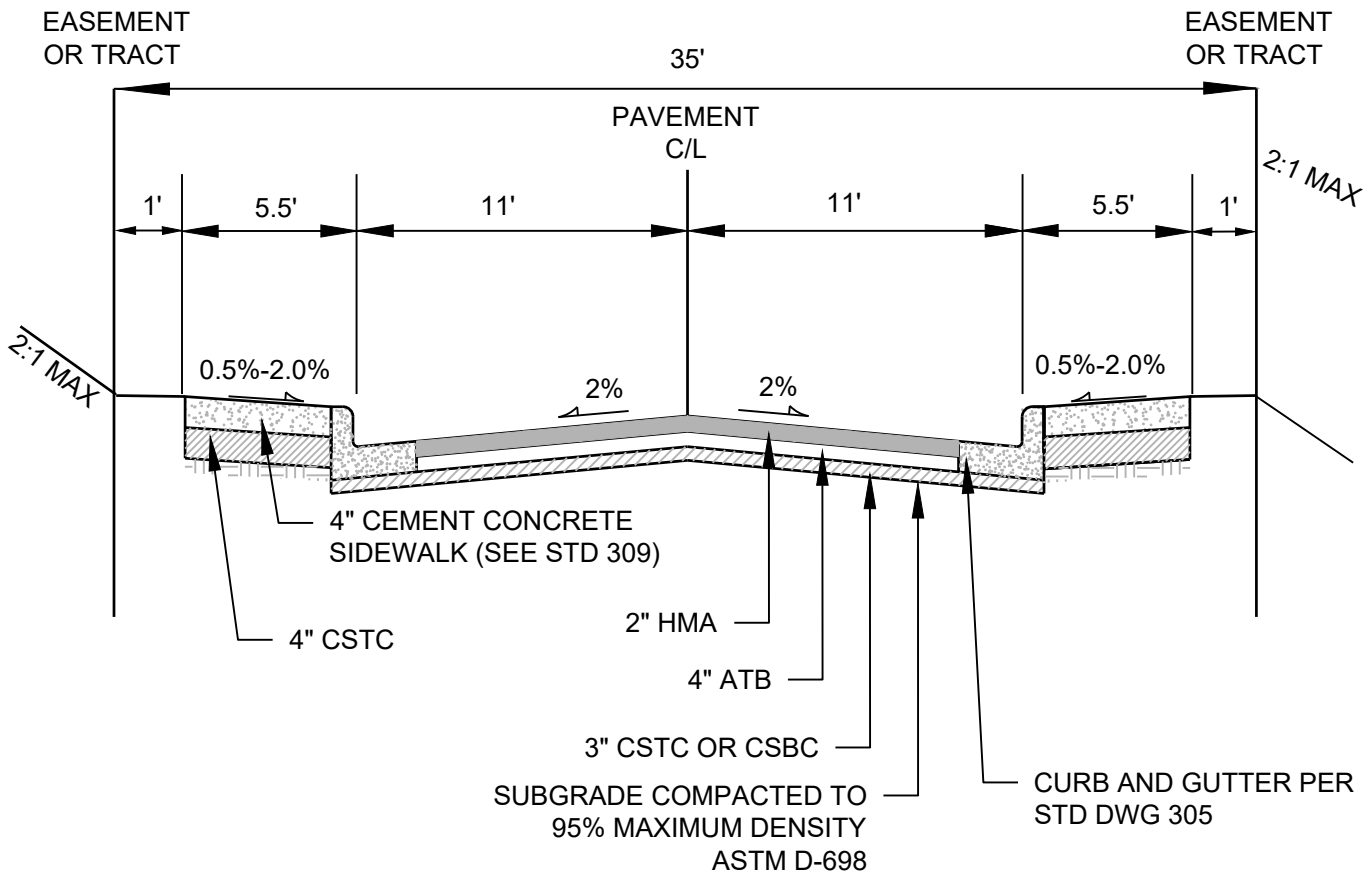

NOTES

1. COMPACTION TESTS ON SUBGRADE ARE REQUIRED. THE NUMBER OF TESTS SHALL BE AT THE DISCRETION OF THE CITY INSPECTOR. ALL TESTING SHALL BE THROUGH A LICENSED TESTING LABORATORY. THE MINIMUM COMPACTION SHALL BE 95% OF MAXIMUM DENSITY, ASTM D-698.
2. CATCH BASIN GRATES, MONUMENT CASES, VALVE BOXES, ETC. SHALL BE ADJUSTED TO FINISH GRADE PRIOR TO THE FINAL LIFT OF ASPHALT.
3. THE CITY ENGINEER MAY REQUIRE THE FINAL 2" LIFT OF HMA TO BE BONDED AND DELAYED FOR UP TO ONE YEAR. ALL UTILITY CASTINGS (MANHOLE COVERS, VALVE BOXES, ETC.) MUST REMAIN AT GRADE UNTIL FINAL PAVING. PRIOR TO FINAL LIFT ALL ATB (SUB PAVING LIFT) DEFICIENCIES MUST BE REPAIRED TO THE SATISFACTION OF THE CITY.
4. DRAINAGE TO BE DIRECTED TO STORM DRAINAGE SYSTEM.
5. PAVEMENT DESIGN ALTERNATIVES MAY BE CONSIDERED SUBJECT TO APPROVAL BY THE CITY ENGINEER. THE MINIMUM STRUCTURAL NUMBER SHALL BE 2.67 FOR PRIVATE ROADS.
6. CLEAR WIDTH OF WALKING SURFACES SHALL BE 36" MINIMUM. REF ADAS 403.5.1

MONROE WASHINGTON

DESCRIPTION

CROWNED PRIVATE ROAD SECTION

DESIGNATION

302

SCALE
NOT TO SCALE

REVISED
FEB 1, 2024

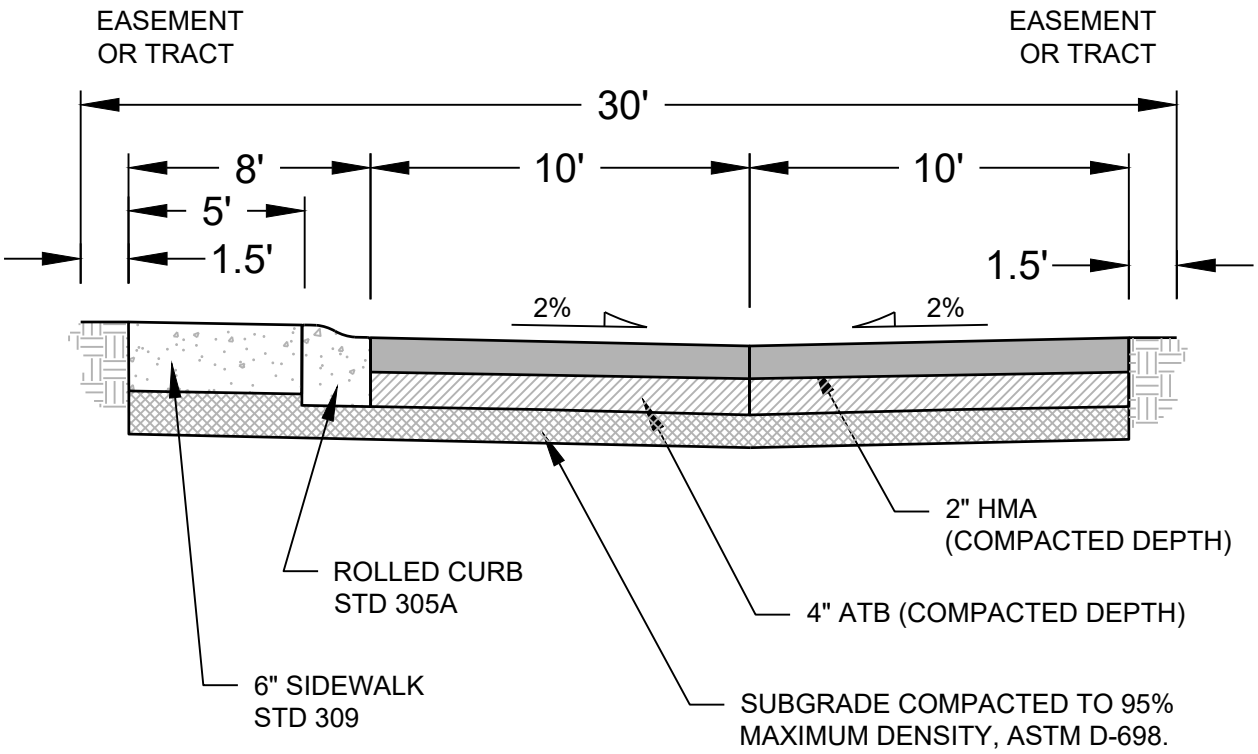

NOTES

1. COMPACTION TESTS ON SUBGRADE ARE REQUIRED. THE NUMBER OF TESTS SHALL BE AT THE DISCRETION OF THE CITY INSPECTOR. ALL TESTING SHALL BE THROUGH A LICENSED TESTING LABORATORY. THE MINIMUM COMPACTION SHALL BE 95% OF MAXIMUM DENSITY, ASTM D-698.
2. CATCH BASIN GRATES, MONUMENT CASES, VALVE BOXES, ETC. SHALL BE ADJUSTED TO FINISH GRADE PRIOR TO THE FINAL LIFT OF ASPHALT.
3. THE CITY ENGINEER MAY REQUIRE THE FINAL 2" LIFT OF HMA TO BE BONDED AND DELAYED FOR UP TO ONE YEAR. ALL UTILITY CASTINGS (MANHOLE COVERS, VALVE BOXES, ETC.) MUST REMAIN AT GRADE UNTIL FINAL PAVING. PRIOR TO FINAL LIFT ALL ATB (SUB PAVING LIFT) DEFICIENCIES MUST BE REPAIRED TO THE SATISFACTION OF THE CITY.
4. DRAINAGE TO BE DIRECTED TO STORM DRAINAGE SYSTEM.
5. PAVEMENT DESIGN ALTERNATIVES MAY BE CONSIDERED SUBJECT TO APPROVAL BY THE CITY ENGINEER.

MONROE WASHINGTON

DESCRIPTION

PRIVATE ROAD SECTION (SHORT PLAT)

DESIGNATION

303

SCALE

NOT TO SCALE

REVISED

FEB 1, 2024

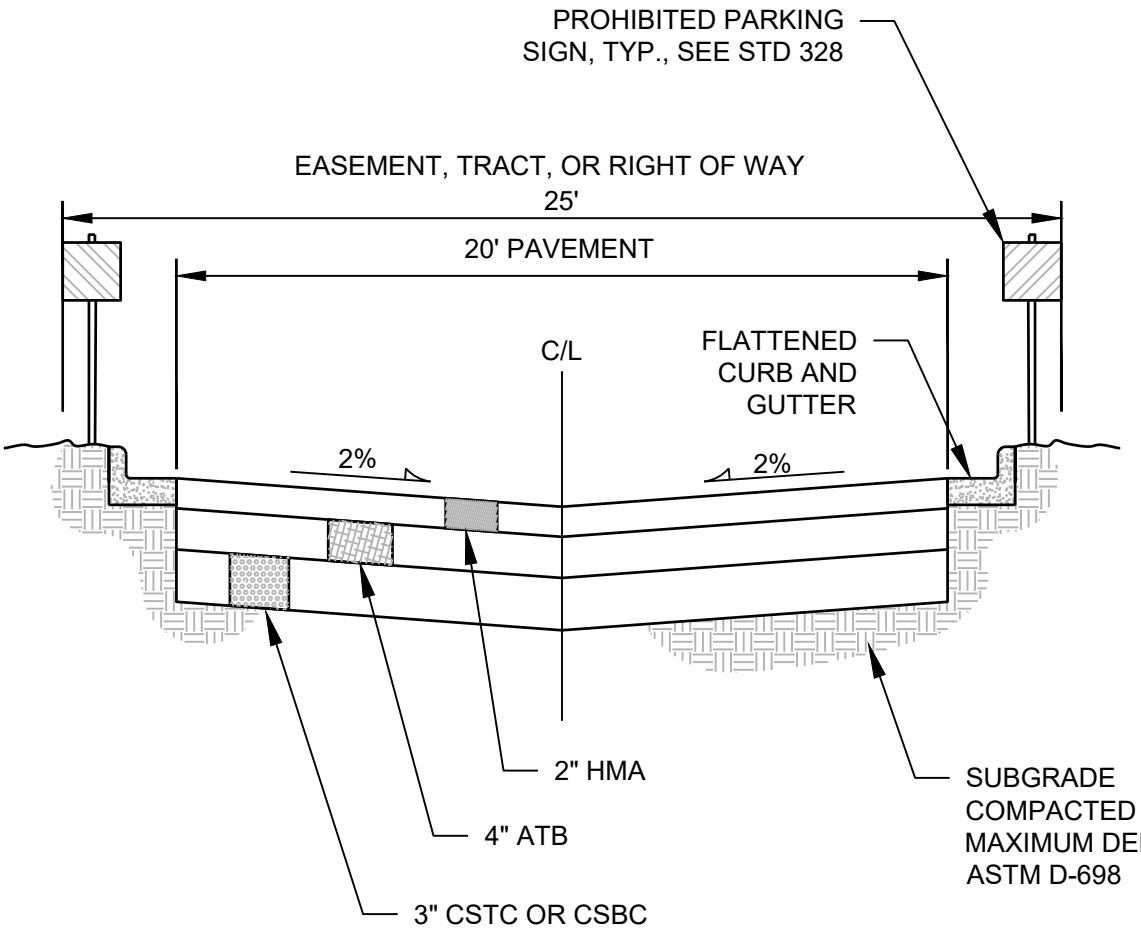

NOTES

1. PRIVATE ROAD SECTION 303A WHEN USED AS A DEAD END ROAD SHALL HAVE A MAXIMUM OF 4 DWELLING UNITS.
2. COMPACTION TESTS ON SUBGRADE ARE REQUIRED. THE NUMBER OF TESTS SHALL BE AT THE DISCRETION OF THE CITY INSPECTOR. ALL TESTING SHALL BE THROUGH A LICENSED TESTING LABORATORY. THE MINIMUM COMPACTION SHALL BE 95% OF MAXIMUM DENSITY.
3. THE FINAL 2" LIFT OF ASPHALT SHALL BE INSTALLED ONE YEAR AFTER FINAL INSPECTION OR FOLLOWING THE COMPLETION OF THE PROJECT. A PERFORMANCE BOND IS REQUIRED FOR FINAL LIFT. ALL PAVEMENT FAILURES MUST BE REPAIRED BY THE CONTRACTOR PRIOR TO FINAL LIFT.
4. CLEAN STORM DRAINAGE BY MEANS OF BMP TO BE DIRECTED TO STORM DRAINAGE SYSTEM.

MONROE WASHINGTON

DESCRIPTION

INVERTED PRIVATE ROAD SECTION

DESIGNATION

303A

SCALE

NOT TO SCALE

REVISED

FEB 1, 2024

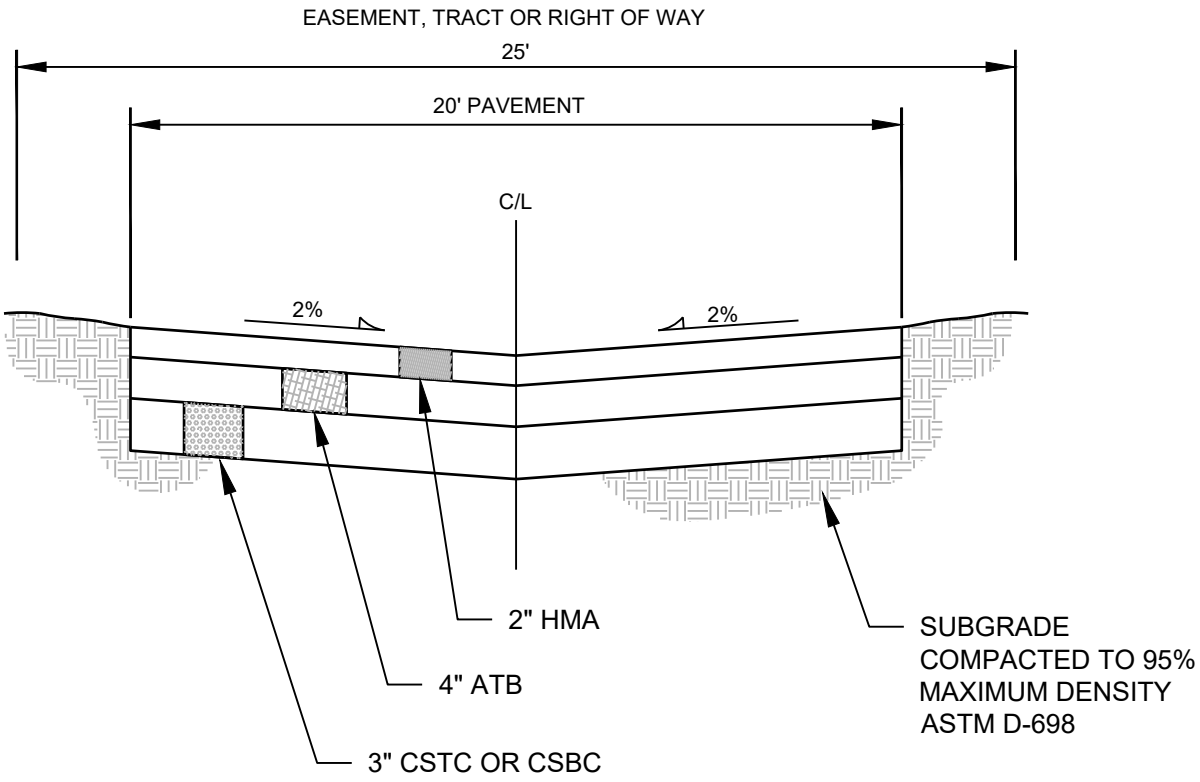

NOTES

1. COMPACTION TESTS ON SUBGRADE ARE REQUIRED. THE NUMBER OF TESTS SHALL BE AT THE DISCRETION OF THE CITY INSPECTOR. ALL TESTING SHALL BE THROUGH A LICENSED TESTING LABORATORY. THE MINIMUM COMPACTION SHALL BE 95% OF MAXIMUM DENSITY.
2. THE FINAL 2" LIFT OF ASPHALT SHALL BE INSTALLED ONE YEAR AFTER FINAL INSPECTION OR FOLLOWING THE COMPLETION OF THE PROJECT. A PERFORMANCE BOND IS REQUIRED FOR FINAL LIFT. ALL PAVEMENT FAILURES MUST BE REPAIRED BY THE CONTRACTOR PRIOR TO FINAL LIFT.
3. DRAINAGE TO BE DIRECTED TO STORM DRAINAGE SYSTEM.

MONROE WASHINGTON

DESCRIPTION
ALLEY

DESIGNATION
303B

SCALE
NOT TO SCALE

REVISED
FEB 1, 2024

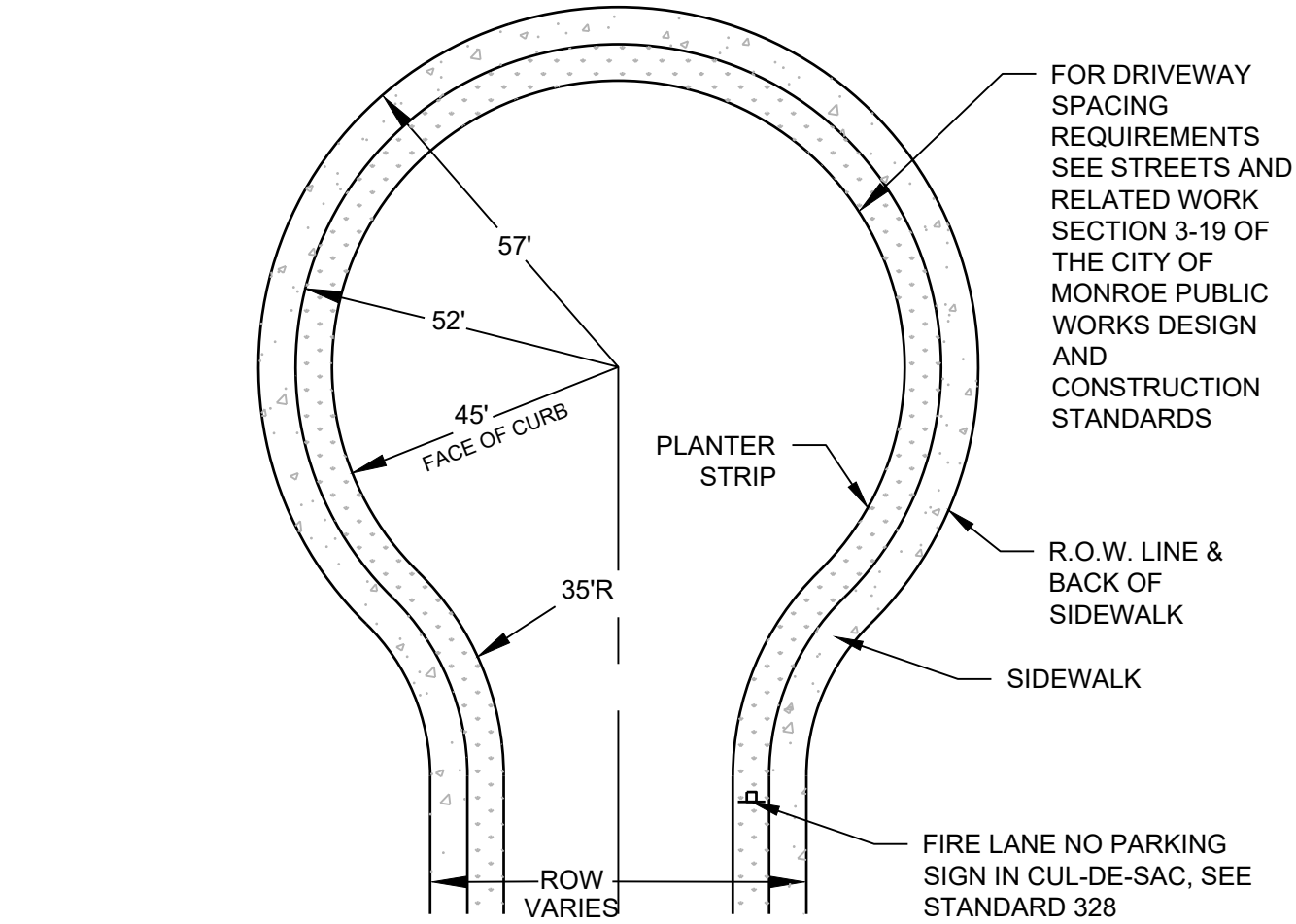

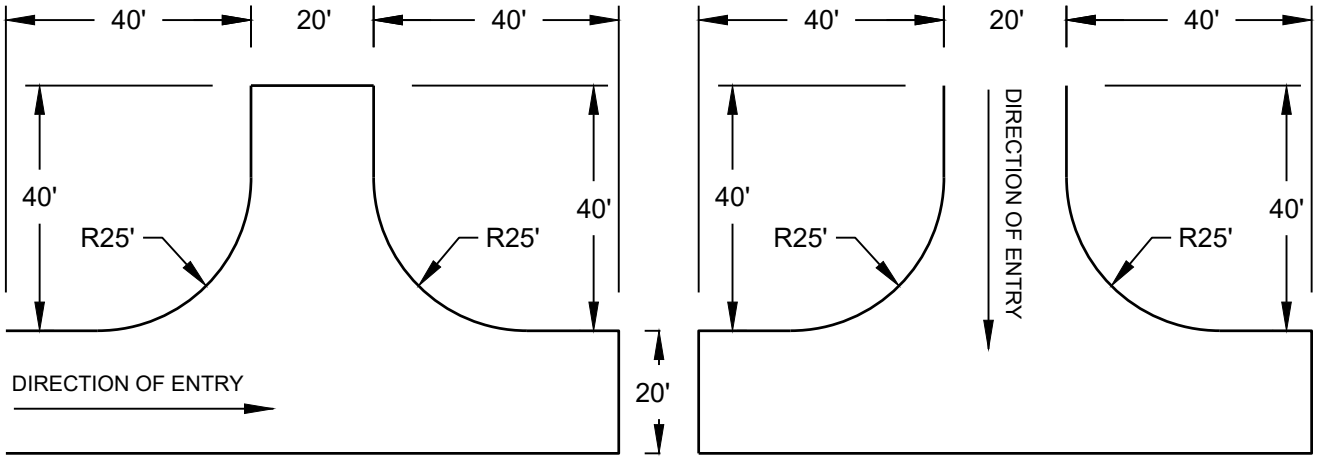

NOTES

1. HAMMER HEAD TURN AROUND SHALL ONLY BE USED ON DEAD END ROADS WITH A MAXIMUM OF 4 DWELLING UNITS
2. INSTALL ROLLED CURB, STANDARD 305A, INSIDE CUL-DE-SAC

	DESCRIPTION	DESIGNATION
MONROE WASHINGTON	CUL-DE-SAC AND HAMMERHEAD	304
	SCALE: NOT TO SCALE / REVISED: FEB 1, 2024	

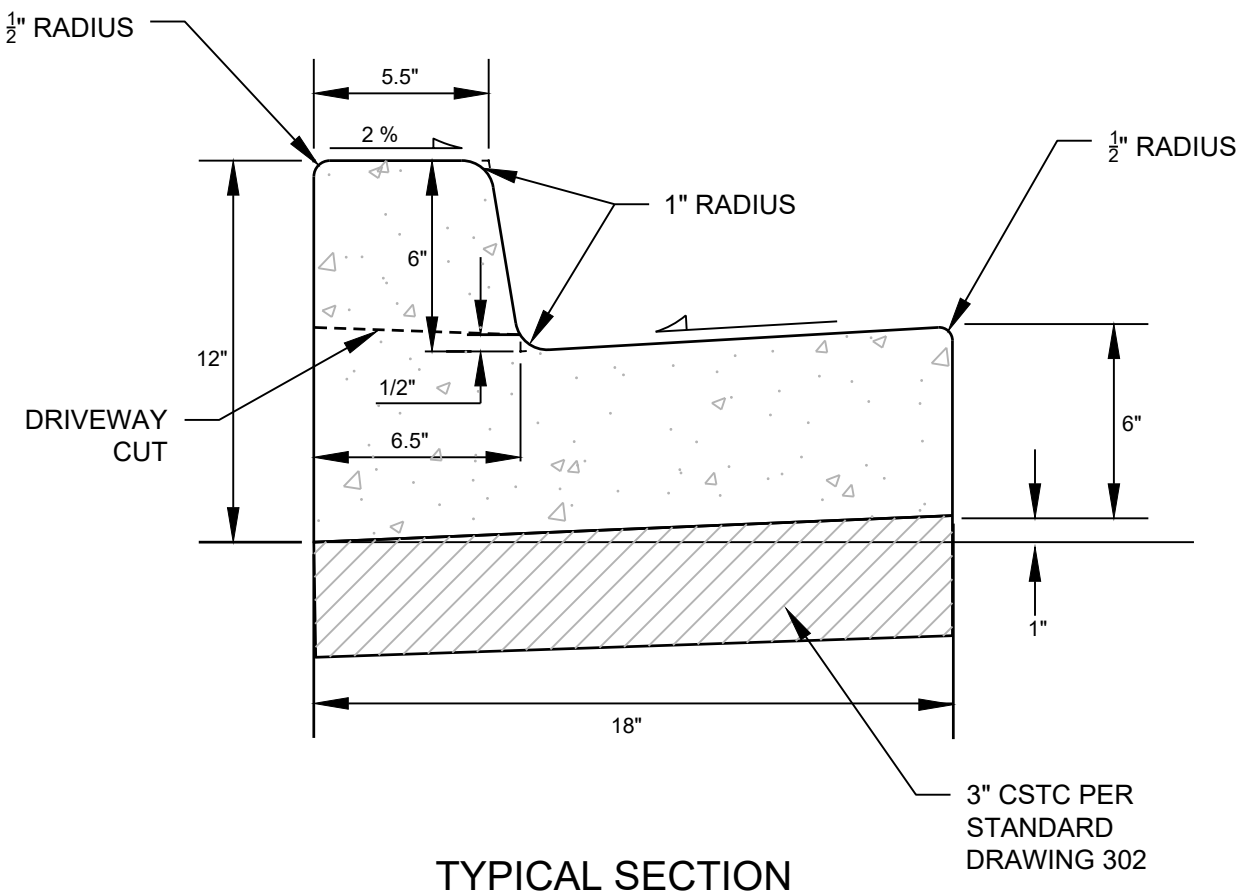

TYPICAL SECTION

NOTES

1. MID DEPTH EXPANSION JOINTS SHALL BE PLACED ON 10 FOOT CENTERS AND ADJACENT TO CATCH BASINS, TANGENT POINTS OF STREETS, ALLEYS, AND DRIVEWAYS. ⅜" EXPANSION JOINT BETWEEN BACK OF CURB AND SIDEWALK. PRE-MOLDED JOINT FILLER MAY BE ⅜" WIDE AND CONFORM TO AASHTO DESIGN M213.
2. CONCRETE SHALL BE CLASS 4000 CONCRETE.
3. STEEL FORMS SHALL BE USED ON TANGENT SECTIONS. WOOD FORMS TO BE USED ON CURVED SECTIONS.
4. FINISH SHALL BE LIGHT BROOM FINISH.

MONROE WASHINGTON

DESCRIPTION
CEMENT CONCRETE CURB AND GUTTER

DESIGNATION
305

SCALE
NOT TO SCALE

REVISED
FEB 1, 2024

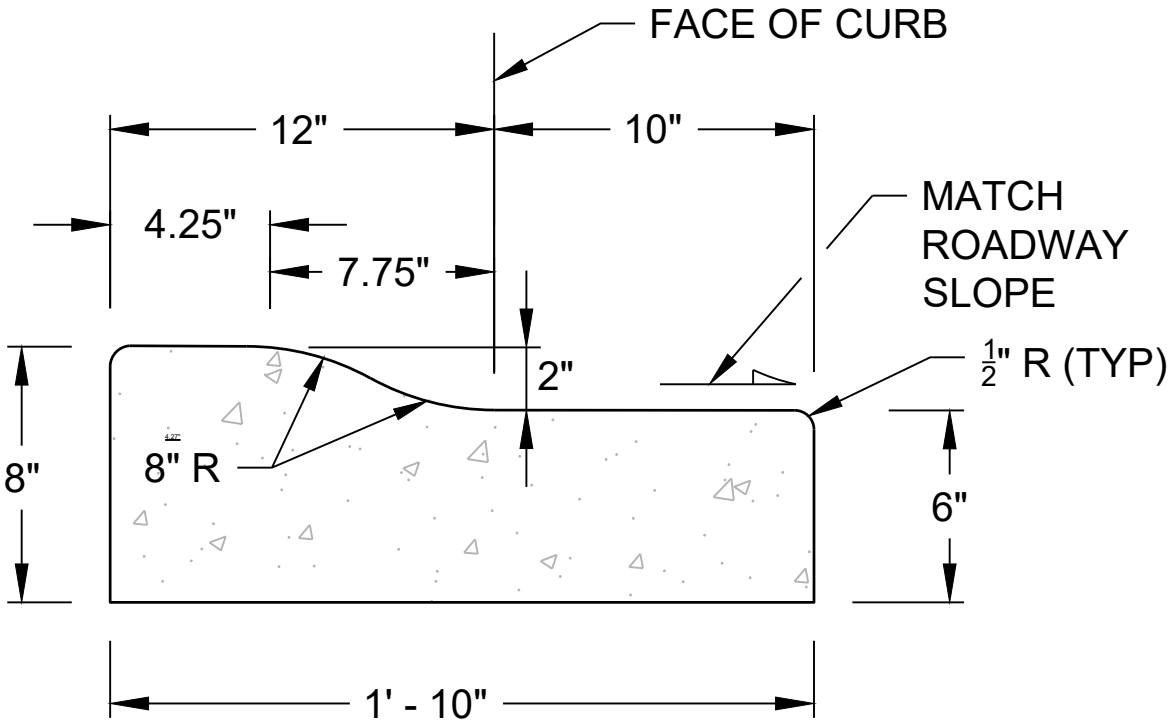

TYPICAL SECTION

NOTES

1. MID DEPTH EXPANSION JOINTS SHALL BE PLACED ON 10 FOOT CENTERS AND ADJACENT TO CATCH BASINS, TANGENT POINTS OF STREETS, ALLEYS, AND DRIVEWAYS. 3/8" EXPANSION JOINT BETWEEN BACK OF CURB AND SIDEWALK. PRE-MOLDED JOINT FILLER MAY BE 3/8" WIDE AND CONFORM TO AASHTO DESIGN M213.
2. CONCRETE SHALL BE CLASS 4000 CONCRETE.
3. STEEL FORMS SHALL BE USED ON TANGENT SECTIONS. WOOD FORMS TO BE USED ON CURVED SECTIONS.
4. FINISH SHALL BE LIGHT BROOM FINISH.

MONROE WASHINGTON

DESCRIPTION	DESIGNATION
ROLLED CURB	305A
SCALE: NOT TO SCALE	REVISED: FEB 1, 2024

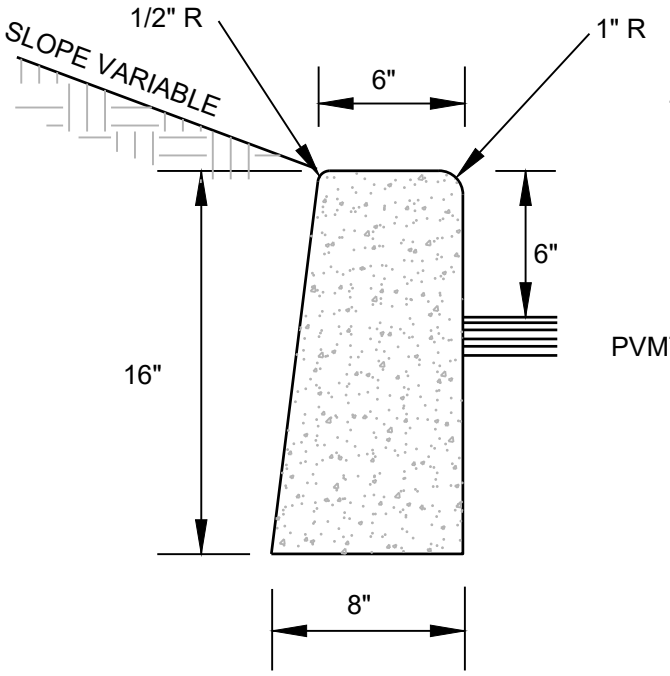

TYPE E1 CURB

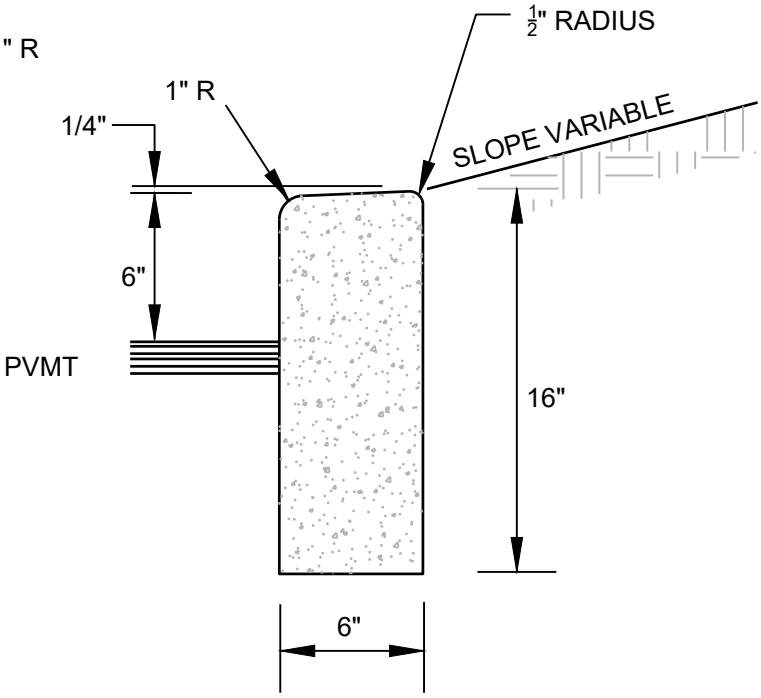

TYPE E2 CURB

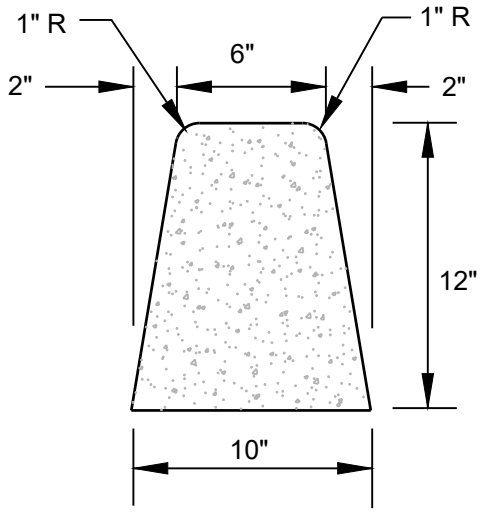

TYPE E3 CURB

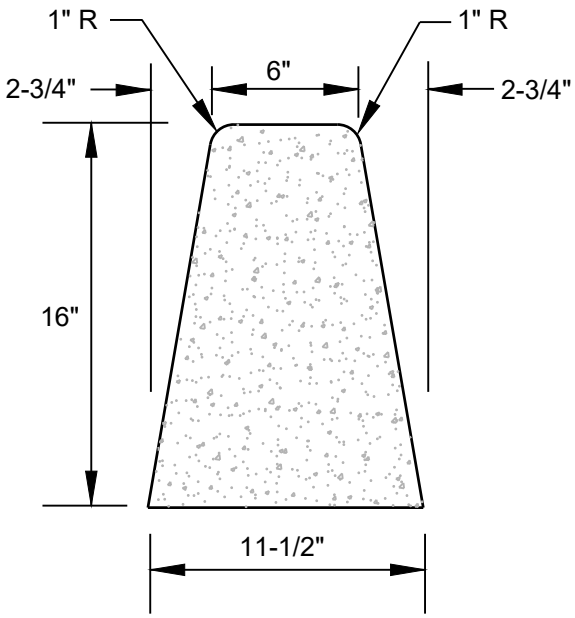

TYPE E4 CURB

NOTES

1. CONCRETE SHALL BE CLASS 4000 CONCRETE.
2. CEMENT CONCRETE CURBS SHALL HAVE A MINIMUM OF 3" CSTC COMPACTED BASE

MONROE WASHINGTON

DESCRIPTION

CEMENT CONCRETE CURBS (E1/E2/E3/E4)

DESIGNATION

306

SCALE

NOT TO SCALE

REVISED

FEB 1, 2024

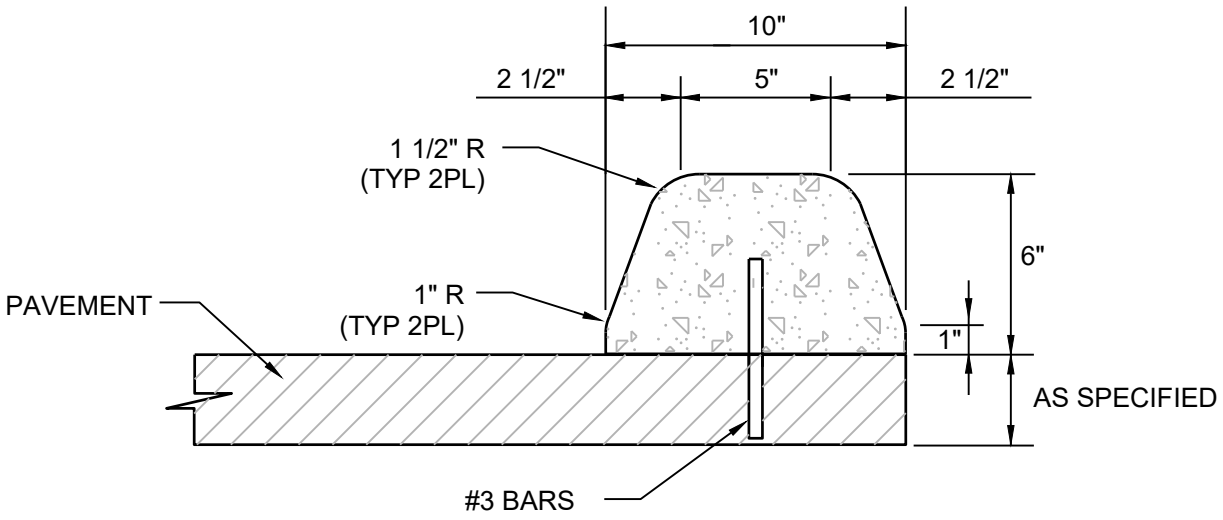

EXTRUDED CEMENT CONCRETE CURB

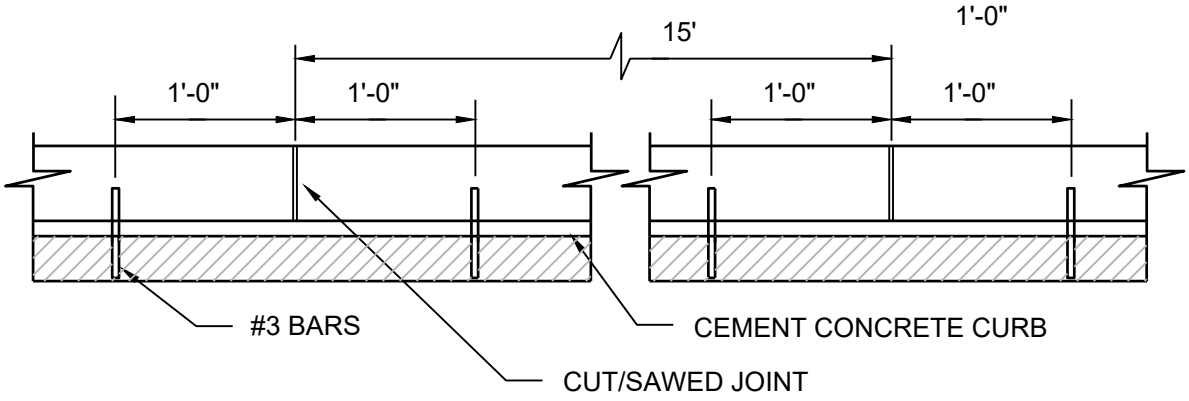

SPACING OF ANCHOR BARS

NOTES

1. CONTROL JOINTS SHALL BE PLACED EVERY 10 FEET. THROUGH JOINTS SHALL BE PLACED ONLY AT POINTS OF TANGENCY, ON STREET ALLEY AND DRIVEWAY RETURNS, AND WHERE THROUGH JOINTS OCCUR IN THE PAVEMENT SLAB.
2. AT THE CONTRACTOR'S OPTION CONCRETE CURBS MAY BE ANCHORED TO THE EXISTING PAVEMENT EITHER BY PLACING STEEL TIE BARS 1 FOOT ON EACH SIDE OF EVERY JOINT, OR BY USING AN ADHESIVE. THE ADHESIVE SHALL MEET THE REQUIREMENTS OF THE WSDOT STANDARD SPECIFICATIONS FOR EPOXY RESIN.

MONROE WASHINGTON

DESCRIPTION
EXTRUDED CONCRETE CEMENT CURB

DESIGNATION
307

SCALE
NOT TO SCALE

REVISED
FEB 1, 2024

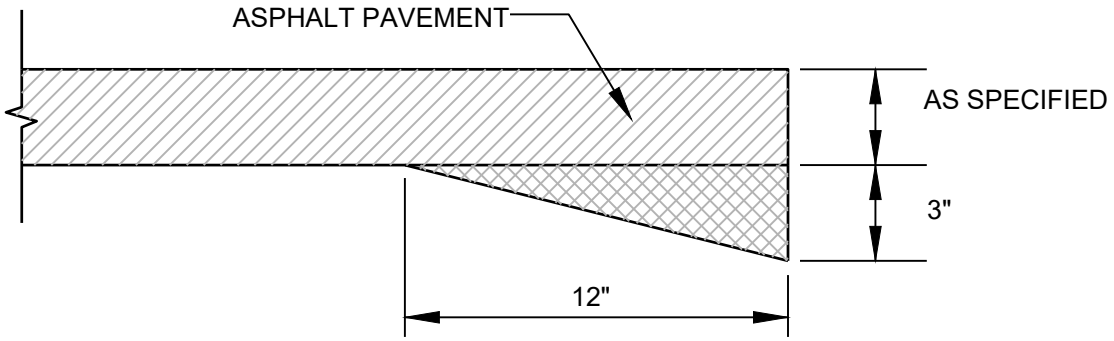

THICKENED EDGE FOR ASPHALT PAVEMENT

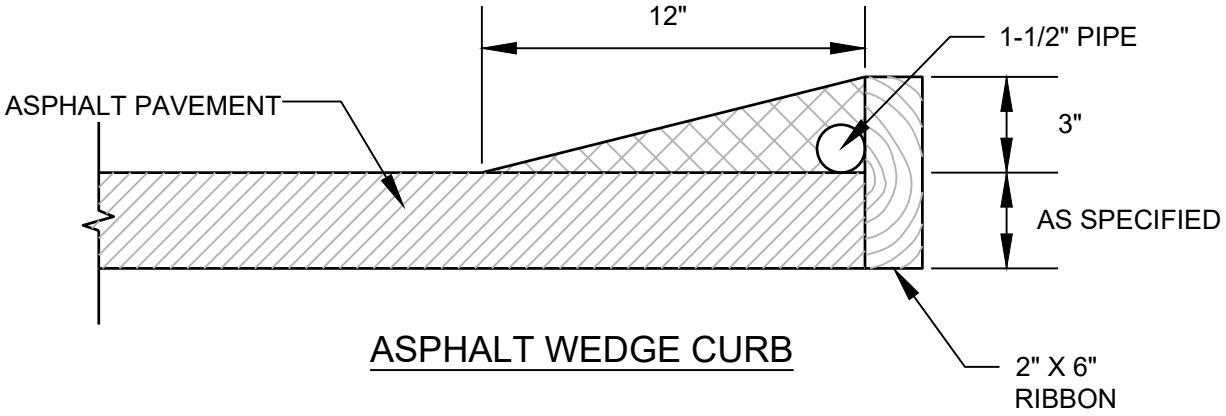

ASPHALT WEDGE CURB

MONROE WASHINGTON

DESCRIPTION

THICKENED ASPHALT EDGE SECTIONS

DESIGNATION

308

SCALE

NOT TO SCALE

REVISED

FEB 1, 2024

NOTES:

1. CONSTRUCTION OF SIDEWALKS SHALL BE IN ACCORDANCE WITH THE CURRENT STANDARD SPECIFICATIONS FOR ROAD, BRIDGE, AND MUNICIPAL CONSTRUCTION AS PUBLISHED BY THE WASHINGTON STATE DEPARTMENT OF TRANSPORTATION AND THE AMERICAN PUBLIC WORKS ASSOCIATION (WSDOT/APWA SPECIFICATIONS) UNLESS OTHERWISE MODIFIED BELOW.

2. CONCRETE SHALL BE CLASS 4000 CONCRETE.

3. FORMS SHALL BE TRUE TO LINE AND GRADE AND SECURELY STAKED. STEEL FORMS ONLY SHALL BE USED ON TANGENT SECTIONS. WOOD FORMS MAY BE USED ON CURVED SECTIONS.

4. RESERVED

5. THE WIDTH OF SIDEWALK SHALL BE 5 FEET MIN. FOR SINGLE FAMILY RESIDENTIAL PROPERTY USES AND 8 FEET MIN. FOR COMMERCIAL/INDUSTRIAL AND MULTI-FAMILY RESIDENTIAL PROPERTY USES.

6. FINISH SHALL BE A LIGHT BROOM FINISH.

7. SUBGRADE COMPACTION FOR SIDEWALKS SHALL MEET A MINIMUM 95% OF MAXIMUM DENSITY IN ACCORDANCE WITH WSDOT/APWA SPECIFICATIONS.

8. PLANTER STRIPS REQUIRED BUT NOT SHOWN.

9. SIDEWALK SHALL BE AT LEAST 6" THICK IN DRIVEWAYS.

10. THE FINISHED SIDEWALK SHALL BE SPRAYED WITH A TRANSPARENT CURING COMPOUND AND COVERED BY WATERPROOF PAPER OR PLASTIC SHEETING IN THE EVENT OF RAIN OR OTHER INCLEMENT WEATHER. CURING TIME SHALL BE FOR A MINIMUM OF 72 HOURS.

11. ALL JOINTS SHALL BE CLEANED AND EDGED WITH AN EDGER HAVING A 1/2" RADIUS.

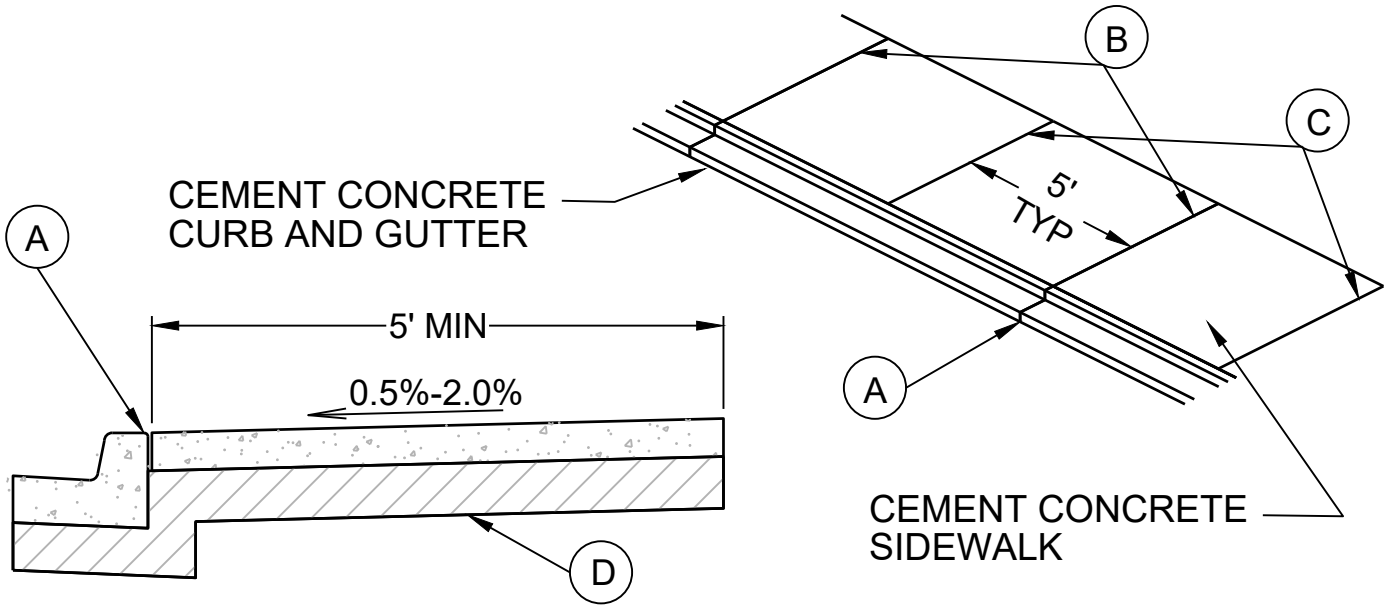

FLAG NOTES:

(A.) EXPANSION JOINTS CONSISTING OF 1/2" X 2" PREMOLDED JOINT MATERIAL SHALL BE PLACED AROUND FIRE HYDRANTS, POLES, METER BOXES AND OTHER OBSTRUCTIONS AND ALONG WALLS OR STRUCTURES IN PAVED AREAS. EXPANSION JOINTS SHALL ALSO BE PLACED AT THE BEGINNING AND THE END OF EACH CURVE, ON EACH SIDE OF STRUCTURES, DROP CURB DRIVEWAYS AND CURB RAMPS, BETWEEN SIDEWALK AND BACK OF CURB WHEN POURED SEPARATELY, AND AT OTHER LOCATIONS AS DIRECTED BY THE ENGINEER. FULL EXPANSION JOINTS SHALL GENERALLY BE PLACED TO MATCH THOSE PLACED IN ADJACENT CURB.

(B.) CONTRACTION JOINTS (CONTROL JOINTS) SHALL CONSIST OF 1/2" X 2" OF PREMOLDED JOINT MATERIAL. WHEN SIDEWALKS ARE PLACED BY SLIP-FORMING, A PREMOLDED STRIP OF 3/8" THICK AND UP TO FULL DEPTH MAY BE USED. CONTRACTION JOINTS (CONTROL JOINTS) IN SIDEWALKS SHALL BE LOCATED SO AS TO MATCH THE JOINTS IN THE CURB WHETHER SIDEWALK IS ADJACENT TO CURB OR SEPARATED BY A PLANTING STRIP. JOINT SEALANTS FOR SAWED CONSTRUCTION JOINTS SHALL MEET THE REQUIREMENTS OF SECTION 9-04.2 OF THE WSDOT/APWA SPECIFICATIONS.

(C.) SCORE MARKS, 1/4" DEEP WITH 2" FLASH ON EITHER SIDE OF CENTER SCORE, ARE TO BE PLACED ON 5 FOOT CENTERS, AND TO CORRESPOND TO THE MARKINGS IN EXISTING SIDEWALKS. WHEN THE SIDEWALK WIDTH EXCEEDS 6 FEET, A LONGITUDINAL SCORE AT THE CENTER OF THE SIDEWALK SHALL BE PROVIDED.

(D.) 4 INCHES OF CRUSHED SURFACING TOP COURSE COMPACTED TO 95% DENSITY.

MONROE WASHINGTON

DESCRIPTION

CEMENT CONCRETE SIDEWALK

DESIGNATION

309

SCALE

NOT TO SCALE

REVISED

FEB 1, 2024

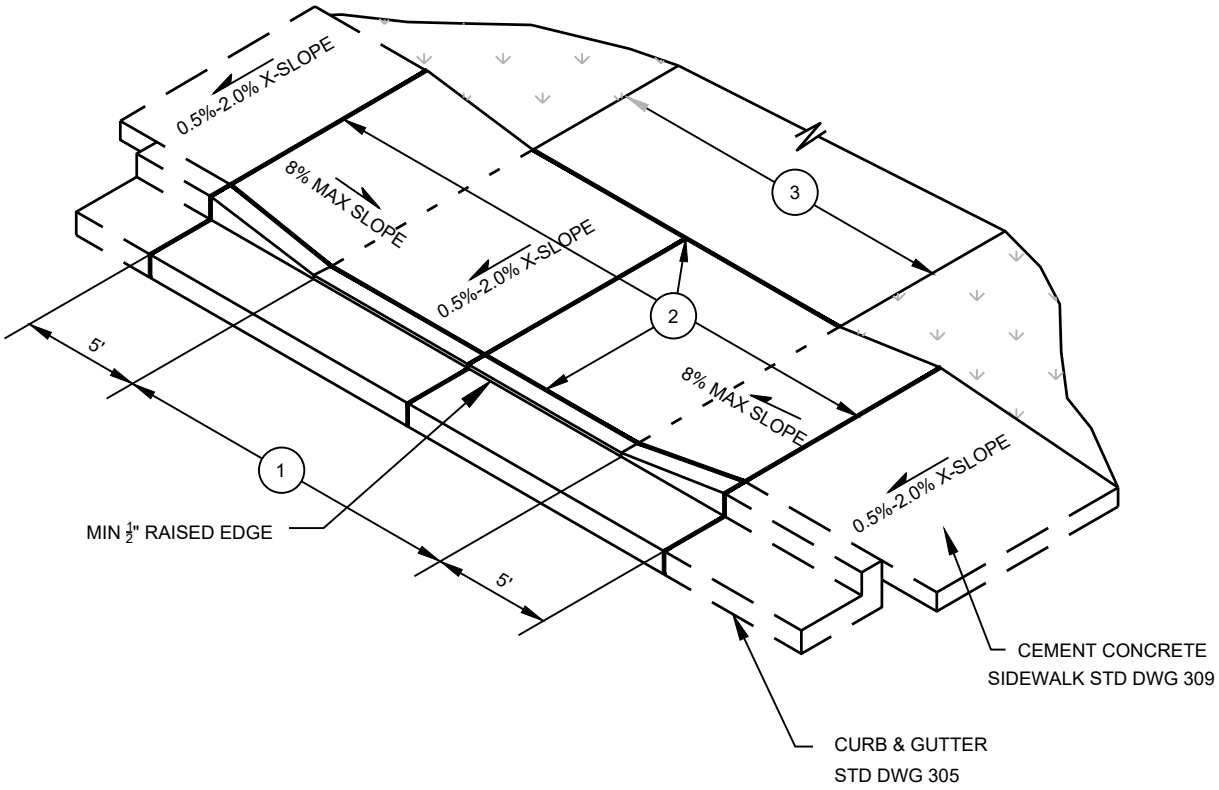

LEGEND:

1. MAXIMUM 20' FOR RESIDENTIAL DRIVEWAY WITH TWO CAR GARAGE. MAXIMUM 35' FOR COMMERCIAL OR INDUSTRIAL DRIVEWAY.
2. 3/8" WIDE 4" DEPTH EXPANSION JOINT.
3. DRIVEWAY TO BE SURFACED WITH ASPHALT, CONCRETE, OR PAVEMENT HARDSCAPE.

NOTES:

1. DRIVEWAY APPROACH APRON AND SIDEWALK CEMENT CONCRETE SHALL BE A MIN OF 6" THICK AND BE PLACED ON A MINIMUM OF 4" CRUSHED SURFACING TOP COURSE COMPACTED TO 95% MAXIMUM DENSITY.

2. CONCRETE SHALL BE 4000 CLASS CONCRETE.

3. ADD ½" ROUNDED EDGE AND 4" FLASHING AT JOINTS.

4. RAMP RUNNING SLOPE SHALL NOT REQUIRE THE RAMP LENGTH TO EXCEED 15 FEET. WHEN APPLYING THE 15-FOOT MAXIMUM LENGTH THE RUNNING SLOPE OF THE CURB RAMPS IS ALLOWED TO EXCEED 8.3%. USE A SINGLE CONSTANT SLOPE FROM THE BOTTOM OF RAMP TO TOP OF RAMP.

MONROE WASHINGTON

DESCRIPTION

CEMENT CONCRETE DRIVEWAY TYPE I

DESIGNATION

310

SCALE

NOT TO SCALE

REVISED

FEB 1, 2024

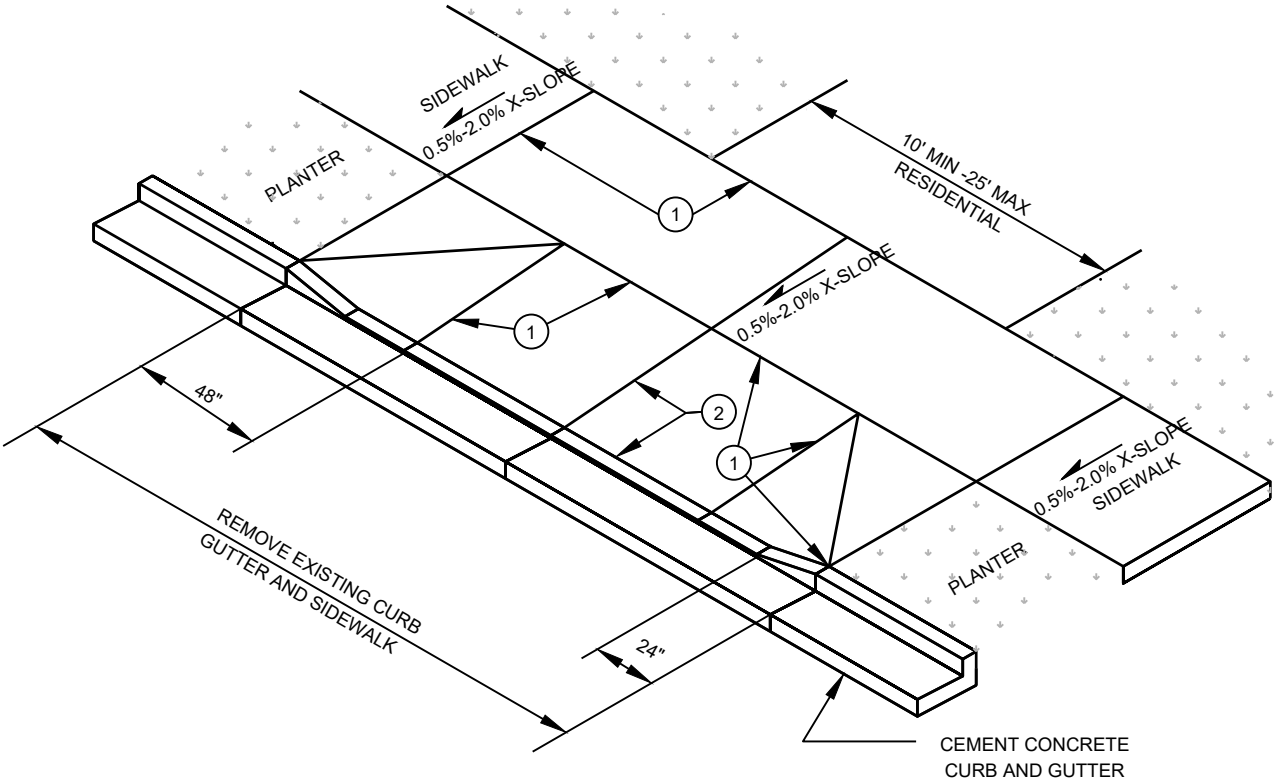

LEGEND:

(1) 6" DEPTH EXPANSION JOINT, 3/8" MINIMUM THICKNESS.

(2) 4" DEPTH EXPANSION JOINT, 3/8" MINIMUM THICKNESS IF WIDTH OF DRIVEWAY IS 15 FEET OR GREATER.

NOTES:

1. MAXIMUM 20' FOR RESIDENTIAL DRIVEWAY WITH TWO CAR GARAGE. 25' MAXIMUM WIDTH IF PROPERTY FRONTAGE EXCEEDS 60'.
2. DRIVEWAY SECTION WITHIN PUBLIC RIGHT-OF-WAY IS TO BE SURFACED WITH ASPHALT OR CONCRETE.
3. DRIVEWAY CEMENT CONCRETE SHALL BE A MIN OF 6" THICK AND BE PLACED ON A MINIMUM OF 4" CRUSHED SURFACING TOP COURSE COMPACTED TO 95% MAXIMUM DENSITY,
4. CONCRETE SHALL BE CLASS 4000 PSI CONCRETE MINIMUM.
5. ADD $\frac{1}{2}$" ROUNDED EDGE AND 4" FLASHING AT JOINTS.

MONROE WASHINGTON

DESCRIPTION

CEMENT CONCRETE DRIVEWAY TYPE II

DESIGNATION

311

SCALE

NOT TO SCALE

REVISED

FEB 1, 2024

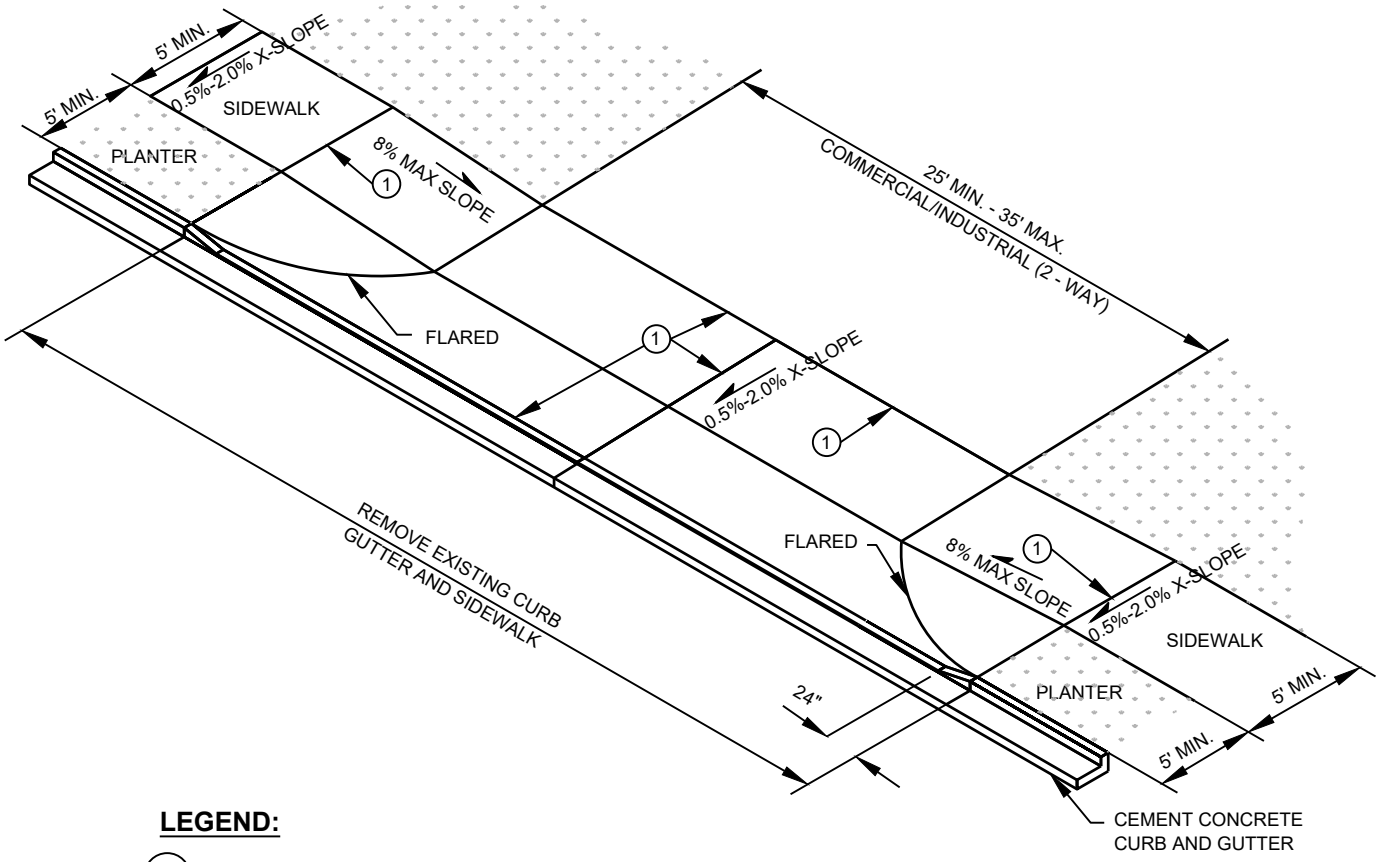

LEGEND:

(1) EXPANSION JOINT, 3/8" MINIMUM THICKNESS.

(2) MAXIMUM 35' FOR COMMERCIAL OR INDUSTRIAL DRIVEWAY.

NOTES:

1. DRIVEWAY SECTION WITHIN PUBLIC RIGHT-OF-WAY IS TO BE SURFACED WITH ASPHALT OR CONCRETE.
2. DRIVEWAY CEMENT CONCRETE SHALL BE A MIN OF 6" THICK AND IS TO BE PLACED ON A MINIMUM OF 4" CRUSHED SURFACING TOP COURSE COMPACTED TO 95% MAXIMUM DENSITY.
3. ADD $\frac{1}{2}$" ROUNDED EDGE AND 4" FLASHING AT JOINTS.
4. COMMERCIAL AND INDUSTRIAL ACCESS WIDTHS SHOWN ARE FOR TWO-WAY ACCESS ONTO NON-ARTERIALS. MINIMUM WIDTH FOR ACCESS ONTO ARTERIALS IS 35 FEET.
5. CONCRETE SHALL BE CLASS 4000 PSI CONCRETE.
6. RAMP RUNNING SLOPE SHALL NOT REQUIRE THE RAMP LENGTH TO EXCEED 15 FEET. WHEN APPLYING THE 15-FOOT MAXIMUM LENGTH THE RUNNING SLOPE OF THE CURB RAMPS IS ALLOWED TO EXCEED 8.3%. USE A SINGLE CONSTANT SLOPE FROM THE BOTTOM OF RAMP TO TOP OF RAMP.

MONROE WASHINGTON

DESCRIPTION

CEMENT CONCRETE DRIVEWAY TYPE III

DESIGNATION

312

SCALE

NOT TO SCALE

REVISED

FEB 1, 2024

TRUNCATED DOME
PANEL REQUIREMENTS

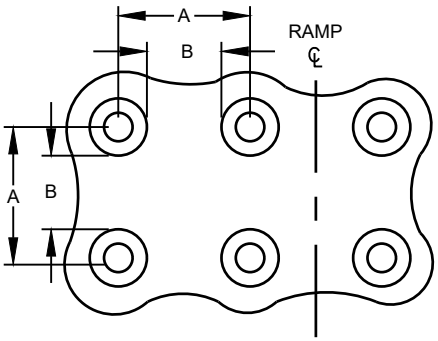

PLAN

	MIN.	MAX.
A	1-5/8"	2-3/8"
B	13/20"	1-1/2"
C	7/16"	3/4"
D	9/10"	1-2/5"

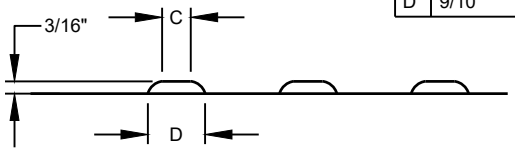

ELEVATION

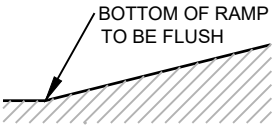

LIP DETAIL

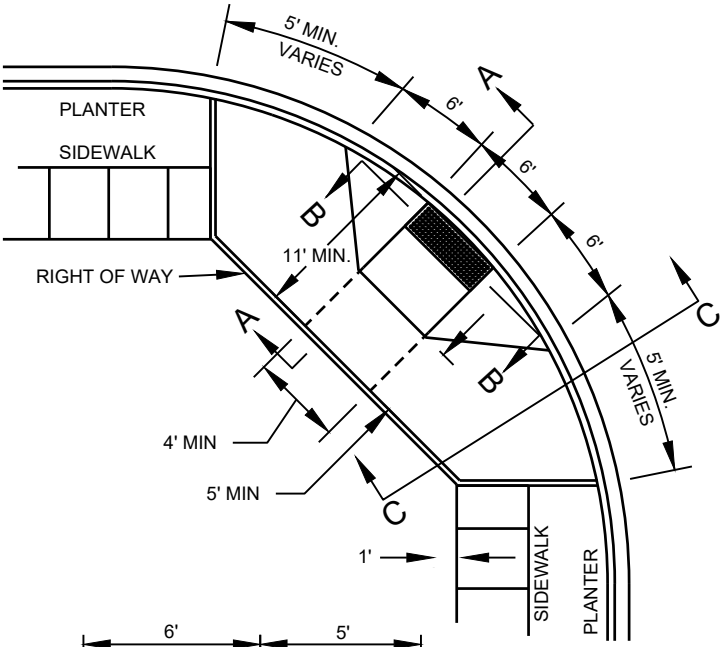

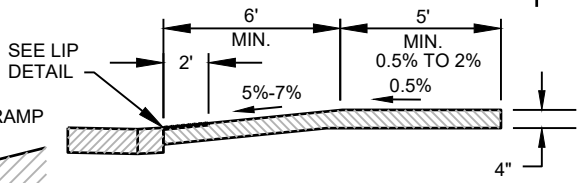

SECTION A-A

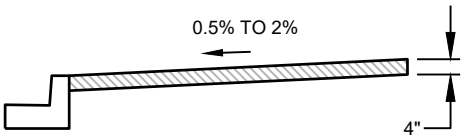

SECTION C-C

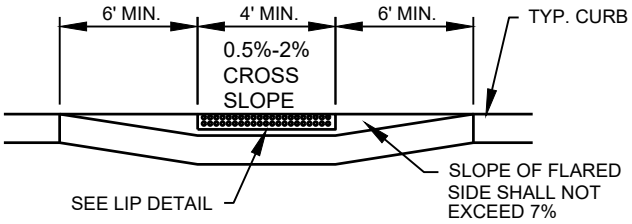

SECTION B-B

NOTES:

1. THE RIGHT OF WAY LINE SHALL ACCOMMODATE THE SIDEWALK.
2. THE CURB RAMP SHALL BE POURED SEPARATE FROM THE SIDEWALK SECTION.
3. TRUNCATED DOME PANELS ARE REQUIRED AS SHOWN AND SHALL BE INSTALLED PER THE MANUFACTURER'S REQUIREMENTS.
4. STAMPING OF TRUNCATED DOMES FOR CURB RAMPS SHALL NOT BE ALLOWED.
5. THE MIN. PANEL SIZE OF TRUNCATED DOMES SHALL BE 2'X3'. THE DETECTABLE WARNING PATTERN AREA SHALL BE YELLOW IN COMPLIANCE WITH STANDARD SPECIFICATION WSDOT/APWA 8-14.3(5).
6. ALL JOINTS SHALL BE EXPANSION JOINTS. THERE SHALL BE NO EXPANSION JOINTS AROUND THE TRUNCATED DOME PANEL.
7. CURB RAMP RUNNING SLOPE SHALL NOT REQUIRE THE RAMP LENGTH TO EXCEED 15 FEET. WHEN APPLYING THE 15-FOOT MAXIMUM LENGTH THE RUNNING SLOPE OF THE CURB RAMP IS ALLOWED TO EXCEED 8.3%. USE A SINGLE CONSTANT SLOPE FROM THE BOTTOM OF RAMP TO TOP OF RAMP.
8. MAXIMUM COUNTER SLOPE IN GUTTER SHALL BE 5%.
9. GRADE BREAKS SHALL BE FLUSH AND PERPENDICULAR TO THE DIRECTION OF TRAVEL AT THE TOP AND BOTTOM OF RAMP RUNS. GRADE BREAKS SHALL NOT BE PERMITTED ON THE SURFACE OF RAMP RUNS AND LANDINGS.
10. BEYOND THE BOTTOM GRADE BREAK A CLEAR SPACE OF 4' BY 4' MINIMUM SHALL BE PROVIDED WITHIN THE WIDTH OF THE CROSSWALK AND OUTSIDE THE PARALLEL VEHICLE TRAVEL LANE.
11. DETECTABLE WARNING SURFACES SHALL BE PLACED PER WSDOT STD PLAN F-45.10.02. DETECTABLE WARNING SURFACES SHALL BE SIZED PER WSDOT STANDARDS.
12. WHEN A RAMP IS CONSTRUCTED TO SERVE A CROSSWALK A SUBSEQUENT RECEIVING RAMP SHALL ALSO BE CONSTRUCTED ACROSS THE STREET IN ACCORDANCE WITH THESE PLANS UNLESS THERE IS NO CURB OR SIDEWALK ON THAT END OF THE CROSSWALK.

MONROE
WASHINGTON

DESCRIPTION
CURB RAMP, TYPE I

DESIGNATION
313

SCALE
NOT TO SCALE

REVISED
FEB 1, 2024

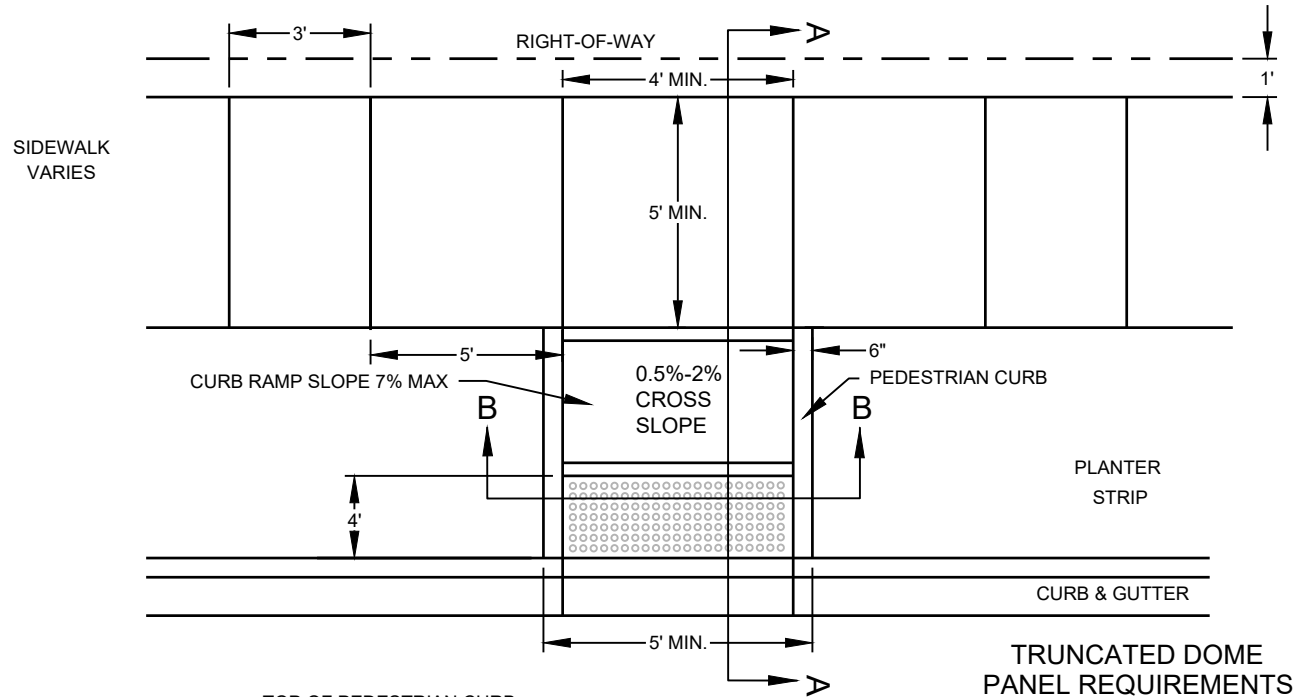

TRUNCATED DOME PANEL REQUIREMENTS

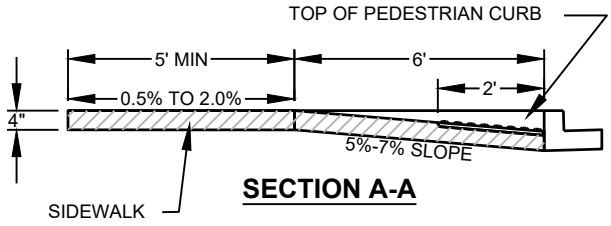

SECTION A-A

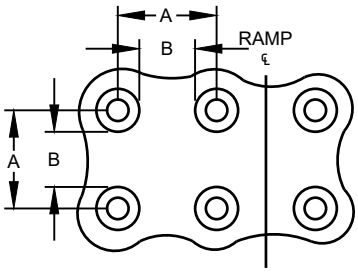

PLAN

	MIN.	MAX.
A	1-5/8"	2-3/8"
B	13/20"	1-1/2"
C	7/16"	3/4"
D	9/10"	1-2/5"

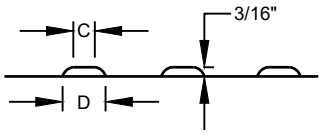

ELEVATION

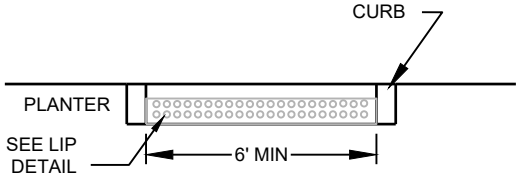

SECTION B-B

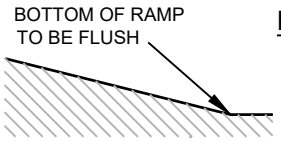

LIP DETAIL

NOTES:

1. THE CURB RAMP SHALL BE POURED SEPERATE FROM THE SIDEWALK SECTION.
2. TRUNCATED DOME PANELS ARE REQUIRED AS SHOWN AND SHALL BE INSTALLED PER THE MANUFACTURER'S REQUIREMENTS.
3. STAMPING OF TRUNCATED DOMES FOR CURB RAMPS SHALL NOT BE ALLOWED.
4. THE MINIMUM TRUNCATED DOME PANEL SIZE SHALL BE 2'X3'. THE DETECTABLE WARNING PATTERN AREA SHALL BE YELLOW IN COMPLIANCE WITH STANDARD SPECIFICATION WSDOT/APWA 8-14.3(5).
5. ALL JOINTS SHALL BE EXPANSION JOINTS. THERE SHALL BE NO EXPANSION JOINTS AROUND THE TRUNCATED DOME PANEL.
6. CURB RAMP RUNNING SLOPE SHALL NOT REQUIRE THE RAMP LENGTH TO EXCEED 15 FEET. WHEN APPLYING THE 15-FOOT MAXIMUM LENGTH THE RUNNING SLOPE OF THE CURB RAMP IS ALLOWED TO EXCEED 8.3%. USE A SINGLE CONSTANT SLOPE FROM THE BOTTOM OF RAMP TO TOP OF RAMP.
7. MAXIMUM COUNTER SLOPE IN GUTTER SHALL BE 5%.
8. GRADE BREAKS SHALL BE FLUSH AND PERPENDICULAR TO THE DIRECTION OF TRAVEL AT THE TOP AND BOTTOM OF RAMP RUNS. GRADE BREAKS SHALL NOT BE PERMITTED ON THE SURFACE OF RAMP RUNS AND LANDINGS.
9. BEYOND THE BOTTOM GRADE BREAK A CLEAR SPACE OF 4' BY 4' MINIMUM SHALL BE PROVIDED WITHIN THE WIDTH OF THE CROSSWALK AND OUTSIDE THE PARALLEL VEHICLE TRAVEL LANE.
10. DETECTABLE WARNING SURFACES SHALL BE PLACED PER WSDOT STANDARD PLAN F-45.10.02. DETECTABLE WARNING SURFACES SHALL BE SIZED PER WSDOT STANDARDS.
11. WHEN A RAMP IS CONSTRUCTED TO SERVE A CROSSWALK A SUBSEQUENT RECEIVING RAMP SHALL ALSO BE CONSTRUCTED ACROSS THE STREET IN ACCORDANCE WITH THESE PLANS UNLESS THERE IS NO CURB OR SIDEWALK ON THAT END OF THE CROSSWALK.

MONROE WASHINGTON

DESCRIPTION

CURB RAMP, TYPE II

DESIGNATION

314

SCALE

NOT TO SCALE

REVISED

FEB 1, 2024

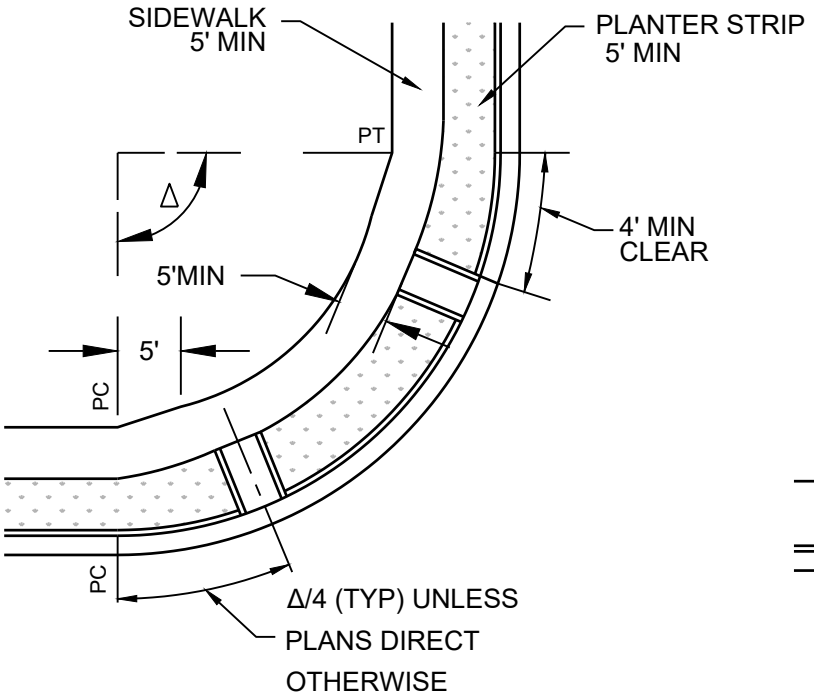

ALTERNATE "A"

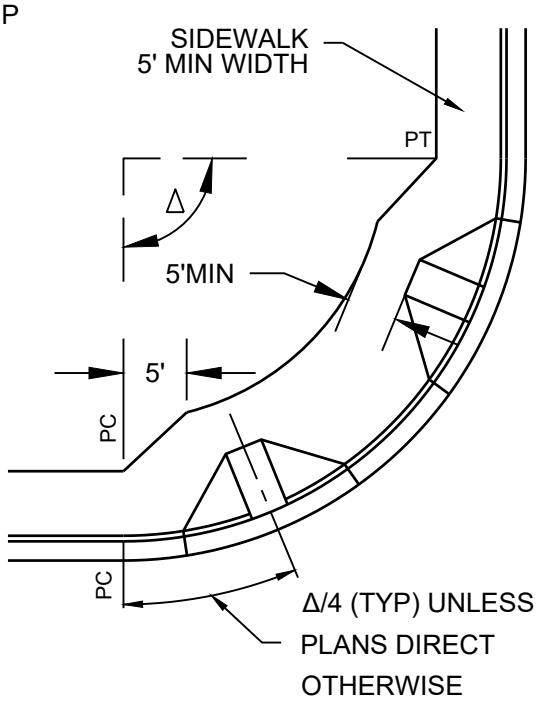

ALTERNATE "B"

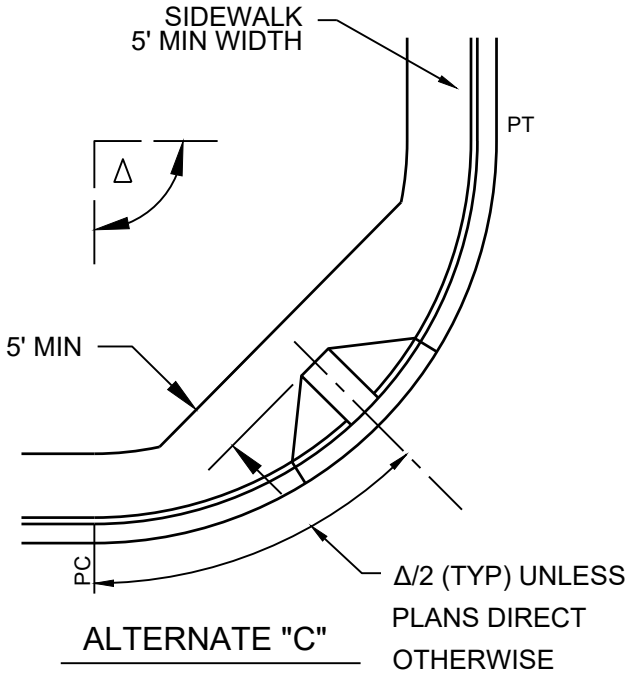

ALTERNATE "C"

1. ALTERNATE C FOR USE AT LOCAL/LOCAL ACCESS INTERSECTIONS.

MONROE WASHINGTON

DESCRIPTION

CURB RAMP LOCATIONS

DESIGNATION

315

SCALE

NOT TO SCALE

REVISED

FEB 1, 2024

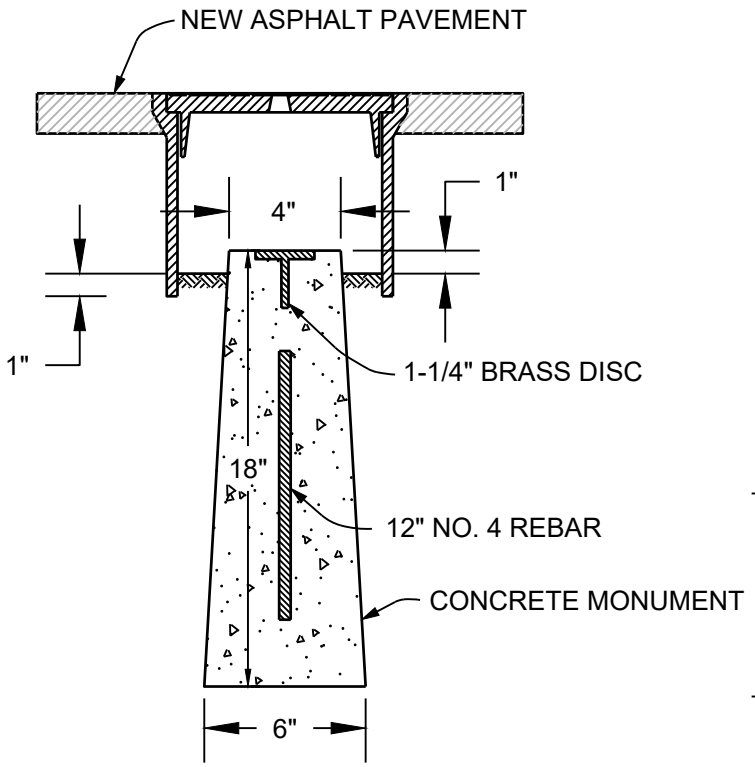

SECTION

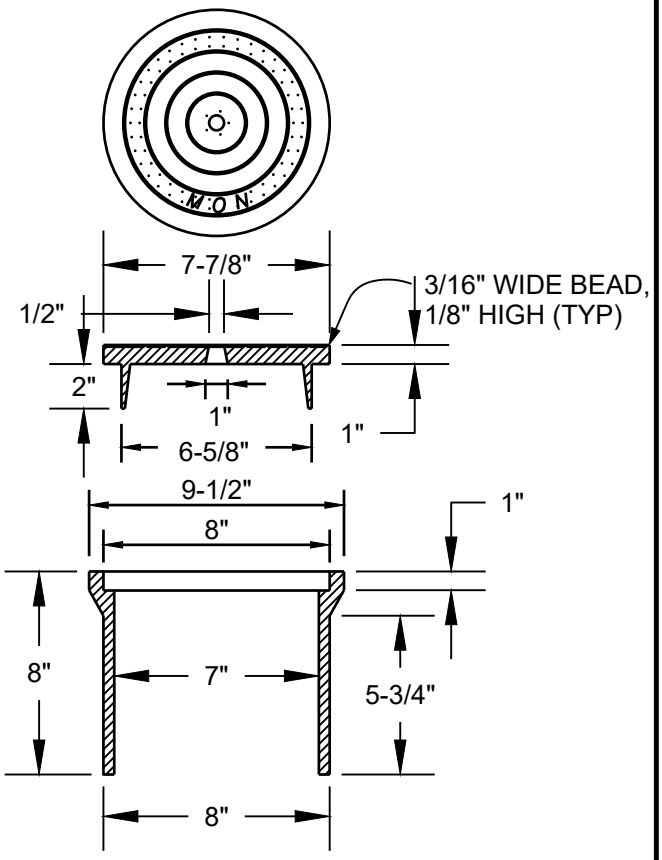

EXTENSION SECTION

NOTES

1. THE OFF STREET MONUMENT SHALL BE THE SAME EXCEPT USING A NO. 8 REBAR AND WITHOUT A CASE AND COVER. THE OFF STREET MONUMENT SHALL BE 3" ABOVE GRADE.
2. MONUMENT CASE AND COVER SHALL BE CAST IRON.
3. BRASS DISC SHALL BEAR LAND SURVEYOR'S REGISTRATION NUMBER.

MONROE WASHINGTON

DESCRIPTION
SURVEY MONUMENT

DESIGNATION
316

SCALE
NOT TO SCALE

REVISED
FEB 1, 2024

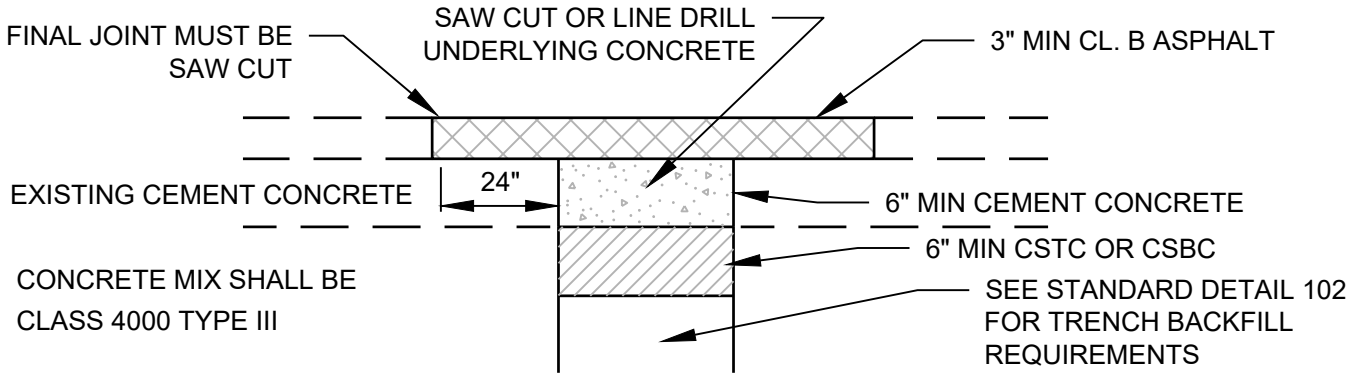

EXISTING ASPHALT CONCRETE OVER CEMENT CONCRETE

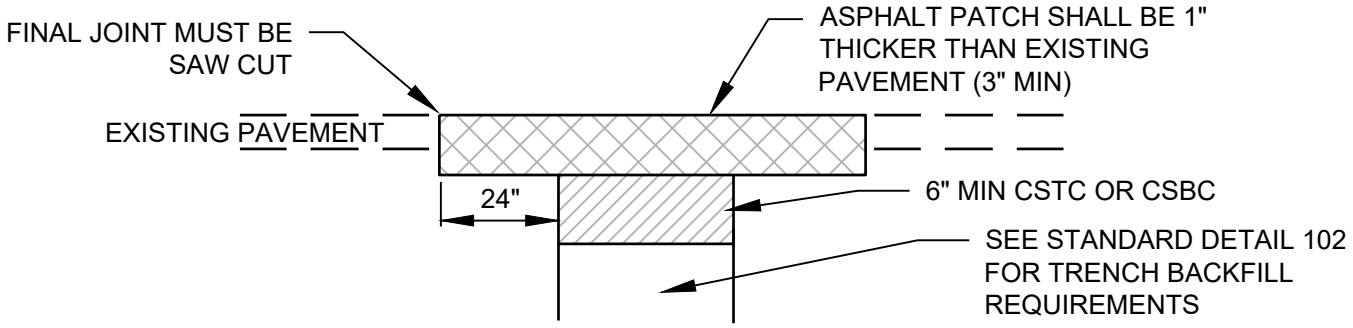

EXISTING ASPHALT CONCRETE OVER PREPARED GRADE

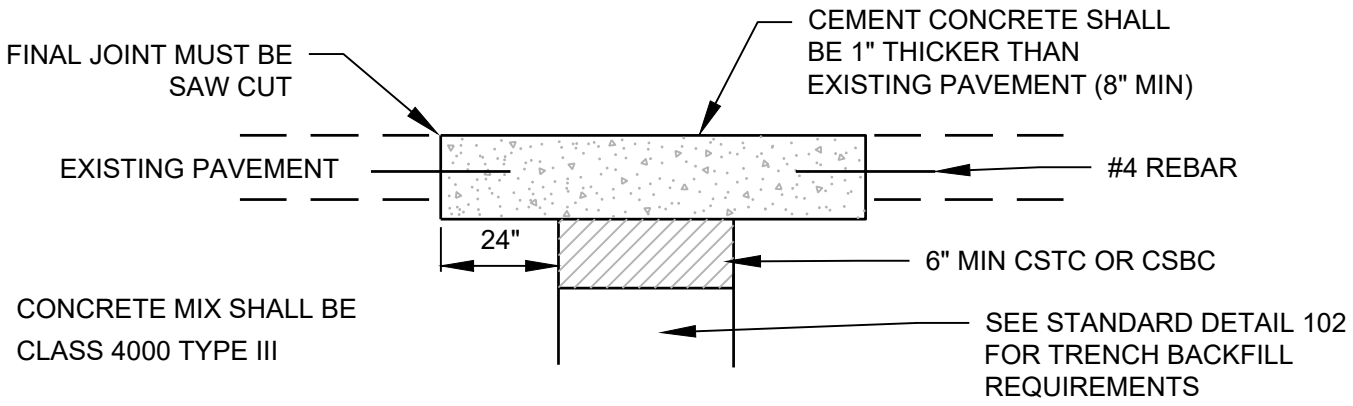

EXISTING CEMENT CONCRETE OVER PREPARED GRADE

NOTES

1. ALL TRENCHES IN ROADWAY AREAS SHALL BE BACKFILLED AND PATCHED WITH TEMPORARY ASPHALT AT THE END OF EACH WORK DAY UNLESS PERMISSION IS GRANTED TO DO OTHERWISE BY THE CITY ENGINEER.
2. ALL TEMPORARY PATCHES ON TRENCHES SHALL BE PERMANENTLY PATCHED WITHIN 2 WEEKS OF COMPLETION OF WORK WITHIN THE ROADWAY AREA.
3. FOR MORE INFORMATION SEE DETAILS 318 AND 318A.

MONROE WASHINGTON

DESCRIPTION
PAVEMENT PATCHING DETAIL

DESIGNATION
317

SCALE
NOT TO SCALE

REVISED
FEB 1, 2024

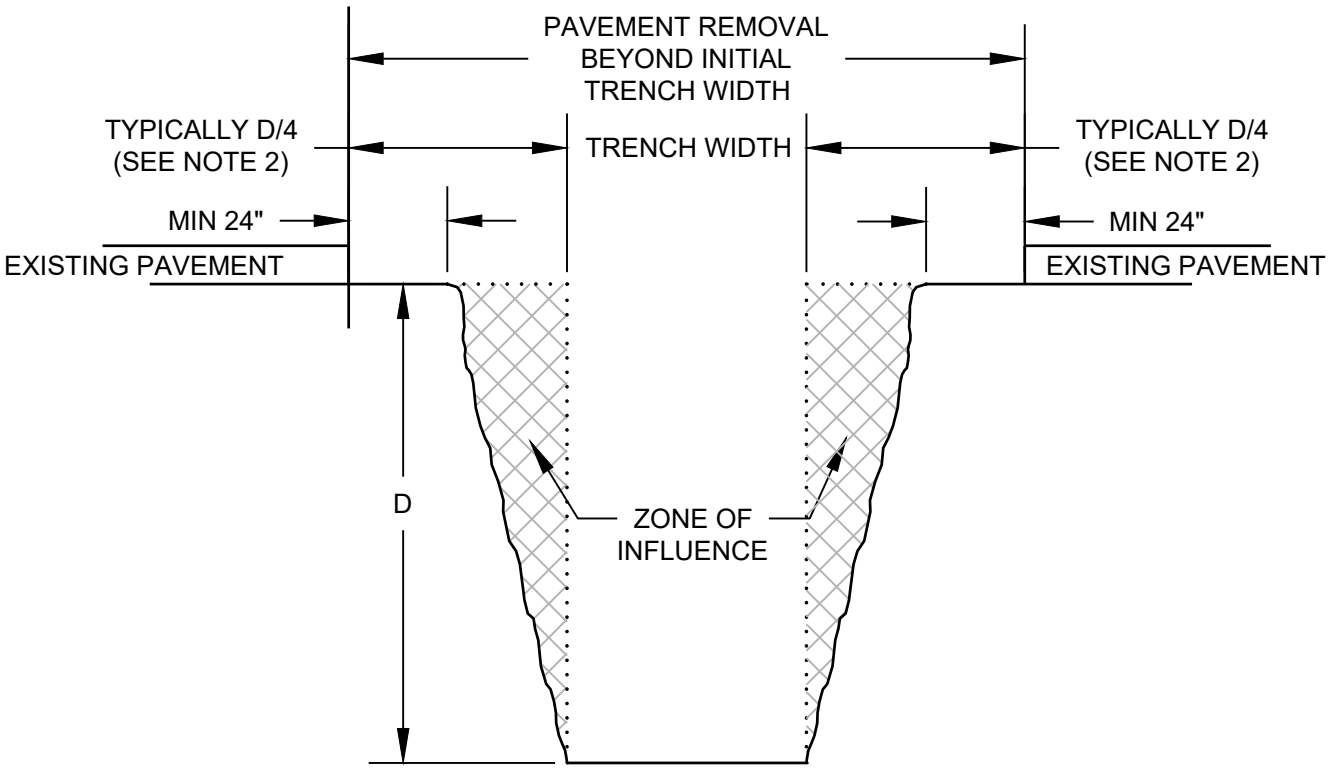

NOTES

1. DUE TO POTENTIAL LOSS OF SOIL STRENGTH IN AREAS ADJACENT TO TRENCH OPENINGS, PAVEMENT REMOVAL SHALL BE WIDENED TO INCLUDE THE ZONE OF INFLUENCE.
2. TYPICALLY, A HORIZONTAL DISTANCE OF 25% OF THE TRENCH DEPTH IS A REASONABLE PREDICTIVE LIMIT TO THE LOSS OF PAVEMENT FOUNDATION SUPPORT. DEPENDING ON SOIL CONDITIONS THE ZONE OF INFLUENCE CAN BE EXTENDED OR SHORTENED. THE CITY ENGINEER SHALL DETERMINE IF ADJUSTMENTS SHOULD BE MADE TO THE FINAL LIMITS FOR THE ZONE OF INFLUENCE.
3. MINIMUM 24-INCHES OF EXISTING PAVEMENT REMOVAL IS REQUIRED.

MONROE WASHINGTON

DESCRIPTION

ZONE OF INFLUENCE

DESIGNATION

318

SCALE

NOT TO SCALE

REVISED

FEB 1, 2024

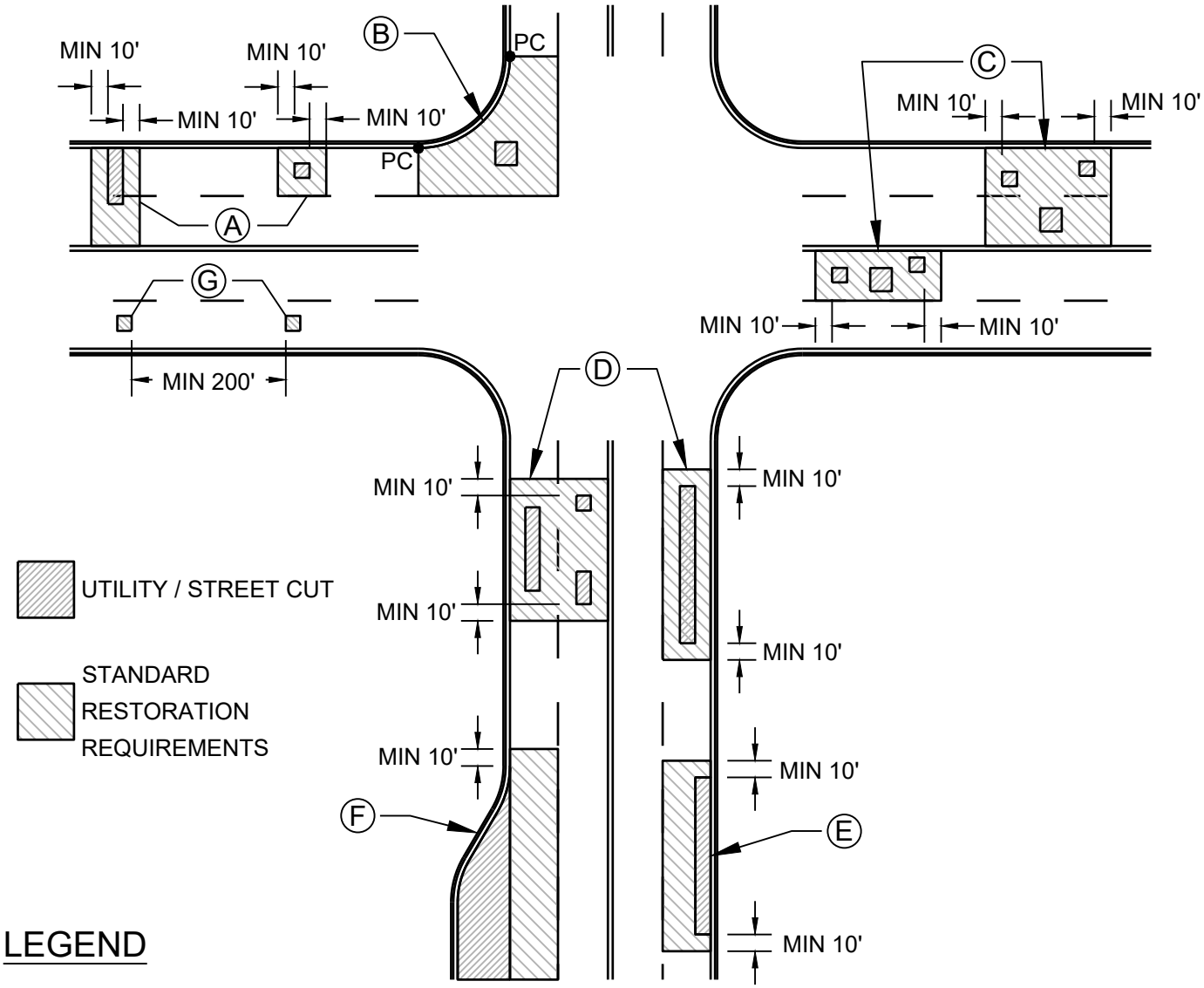

LEGEND

- (A.) SINGLE TRANSVERSE CUTS WITH NO OTHER CUTS WITHIN 50-FEET SHALL BE PATCHED PER STANDARD 317. PATCHES SHALL EXTEND 2-FEET BEYOND CUT. PATCHES SHALL EXTEND TO FULL LANE WIDTH.
- (B.) INTERSECTION CUTS SHALL PATCH FROM INTERSECTION POINT OF CURVATURE TO THE NEAREST APPLICABLE LANE OF TRAVEL.
- (C.) MULTIPLE TRANSVERSE CUTS IN THE ROADWAY THAT ARE WITHIN 50-FEET OF EACH OTHER SHALL BE PATCHED 2-FEET BEYOND THE OUTERMOST CUT EDGE LINE.
- (D.) MULTIPLE LONGITUDINAL CUTS IN THE ROADWAY SHALL PATCH THE FULL LANE WIDTH EXTENDING 2-FEET BEYOND THE OUTERMOST CUT EDGE LINE.
- (E.) CURB AND GUTTER PATCHES SHALL EXTEND TO THE FULL LANE THAT IS CUT. PATCH MAY NOT BE REQUIRED IF WORK DOES NOT DISTURB DRIVE LANE.
- (F.) PARKING AND WIDENED ROADWAY SHALL BE PATCHED TO INCLUDE NEAREST FULL LANE IF DRIVE LANE IS DISTURBED.
- (G.) ROAD CUT AREAS LESS THAN 25 SF WITH NO OTHER CUTS WITHIN 200-FEET SHALL PATCH PER STANDARD 317.

NOTES

1. ON ROADS PAVED WITHIN THE PAST 36 MONTHS, THE PATCH WILL INCLUDE A GRIND/OVERLAY A MINIMUM OF 25' BEYOND THE TRENCH EDGE.
2. EXEMPTION TO THE OVERLAY REQUIREMENT MAY BE GRANTED BY THE CITY ENGINEER IF THE TRENCHING WORK IS LOCATED WITHIN A ROAD THAT IS CURRENTLY PLANNED TO BE OVERLAID WITHIN THE NEXT CALENDAR YEAR.

MONROE WASHINGTON

DESCRIPTION

PAVEMENT RESTORATION

DESIGNATION

318A

SCALE

NOT TO SCALE

REVISED

FEB 1, 2024

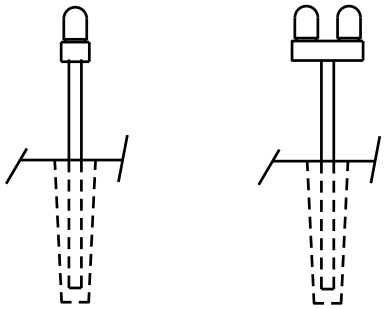

TYPICAL CONFIGURATIONS

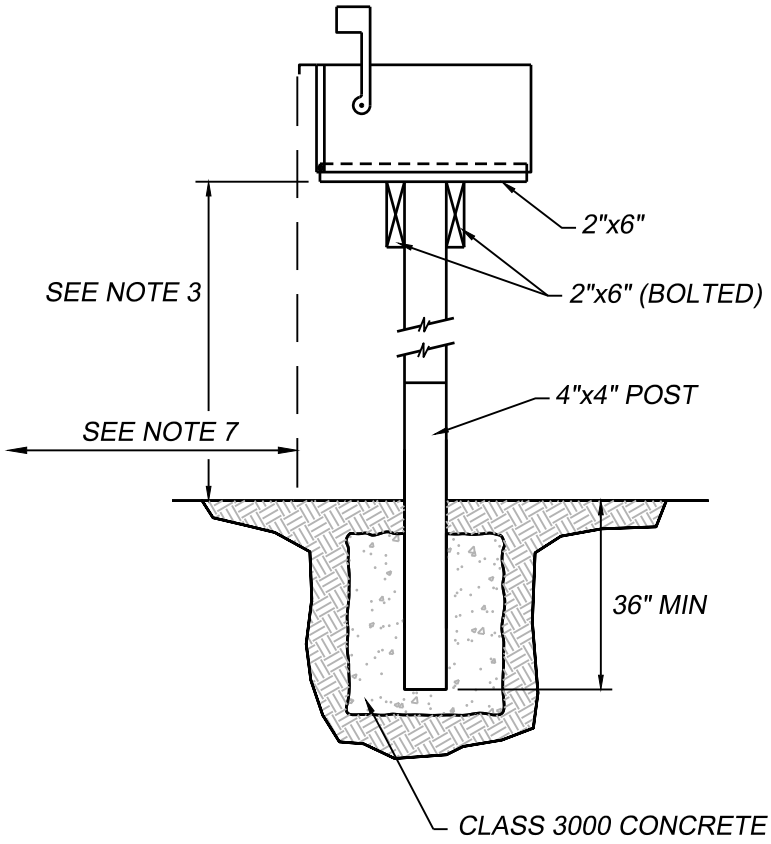

TYPICAL SECTION

NOTES

1. FOR 1 OR 2 MAILBOXES USE SINGLE 4X4 POST.
2. ALL WOOD TO BE PRESSURE TREATED FIR OR HEMLOCK.
3. MAILBOX HEIGHT VARIES ACCORDING TO THE TYPE OF DELIVERY VEHICLE. REFER TO THE USPS FOR REQUIREMENTS.
4. MAILBOXES MUST BE POSTMASTER APPROVED WITH A UNIFORM BOX STYLE AND METHOD OF ADDRESS IDENTIFICATION.
5. LOCATIONS OF MAILBOXES ARE SUBJECT TO APPROVAL BY THE CITY ENGINEER FOR PROTECTION OF VIEWS AND ACCESS.
6. THIS DRAWING DEPICTS A MINIMUM STRUCTURAL AND DIMENSIONAL STANDARD. INNOVATIVE DESIGNS MEETING OR EXCEEDING THIS MINIMUM STANDARD MUST BE APPROVED BY THE CITY ENGINEER.
7. ALL MAILBOX STRUCTURES SHALL BE PLACED BACK OF SIDEWALK WITH NO PORTION OF THE BOX OR STRUCTURE PROTRUDING INTO THE SIDEWALK. IF NO SIDEWALK EXISTS SETBACK WILL BE SET BY THE CITY ENGINEER.

MONROE WASHINGTON

DESCRIPTION
RESIDENTIAL MAILBOX

DESIGNATION
319

SCALE
NOT TO SCALE

REVISED
FEB 1, 2024

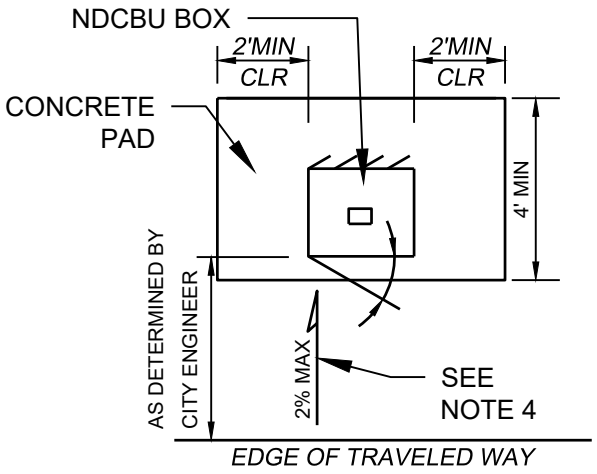

NO SIDEWALK PLAN

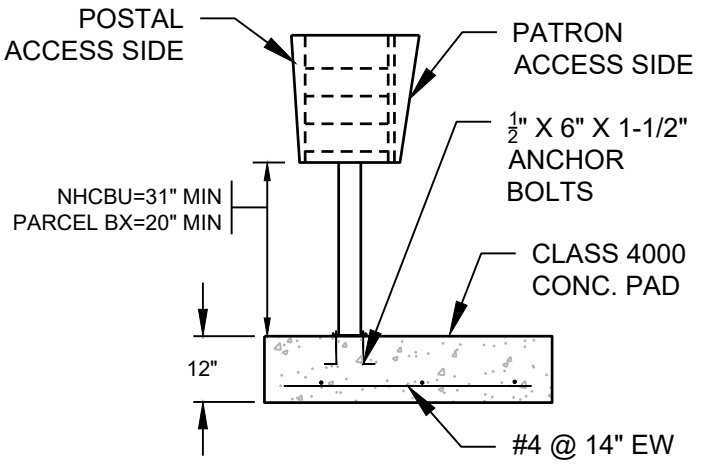

SIDE ELEVATION

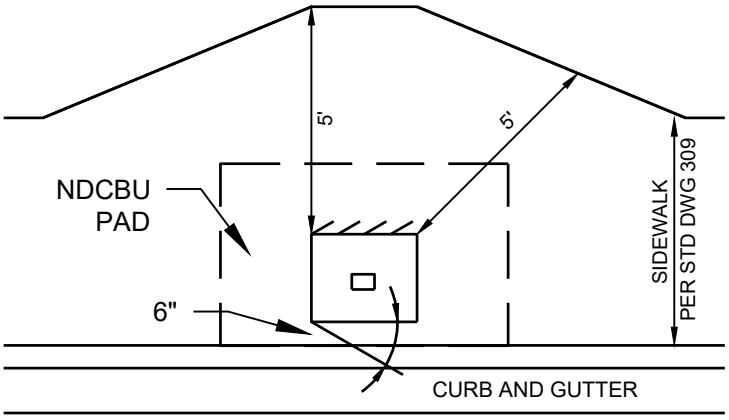

SIDEWALK PLAN

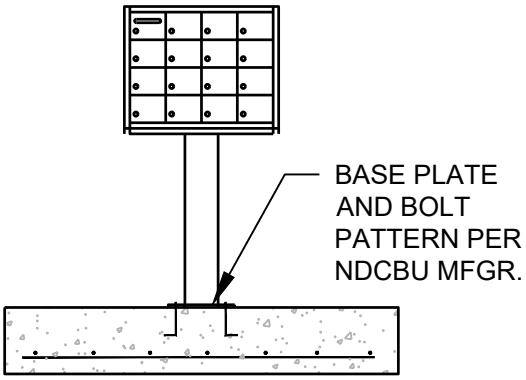

FRONT ELEVATION

NOTES

1. THIS DRAWING DEPICTS A MINIMUM STRUCTURAL AND DIMENSIONAL STANDARD FOR NEIGHBORHOOD DELIVERY AND COLLECTION BOX UNIT (NDCBU) AND PADS FOR SPECIFIC POSTAL REQUIREMENTS CONTACT THE POSTMASTER.
2. MAILBOXES MUST BE POSTMASTER APPROVED WITH A UNIFORM BOX STYLE AND METHOD OF ADDRESS IDENTIFICATION.
3. LOCATIONS OF MAILBOXES ARE SUBJECT TO APPROVAL BY THE CITY ENGINEER FOR PROTECTION OF VIEWS AND ACCESS.
4. INSTALLATION OF DRAINAGE CULVERT MAY BE NECESSARY IN AREAS WHERE THERE IS NO CONCRETE SIDEWALK AND THE REQUIRED SETBACK SPANS A ROADSIDE DITCH. ACCESS TO SUCH STRUCTURES WILL HAVE MAXIMUM SLOPE OF 2% AND SHALL HAVE A PAD CONSISTING OF A MINIMUM OF 2" OF CRUSHED SURFACING TOP COURSE COMPACTED TO 95% MAXIMUM DENSITY.
5. SUGGESTED SOURCE SECURITY MFG CORP (800) 762-6937, 8000 SERIES PEDESTAL BOXES, SALSBURY INDUSTRIES (800) 323-3003 OR POSTAL APPROVED EQUAL.
6. PLACEMENT LOCATION OF PEDESTAL PARCEL LOCKER WILL BE APPROVED BY THE CITY ENGINEER AND THE POSTAL SERVICE.

MONROE WASHINGTON

DESCRIPTION
NDCBU MAILBOX CLUSTER

DESIGNATION
320

SCALE
NOT TO SCALE

REVISED
FEB 1, 2024

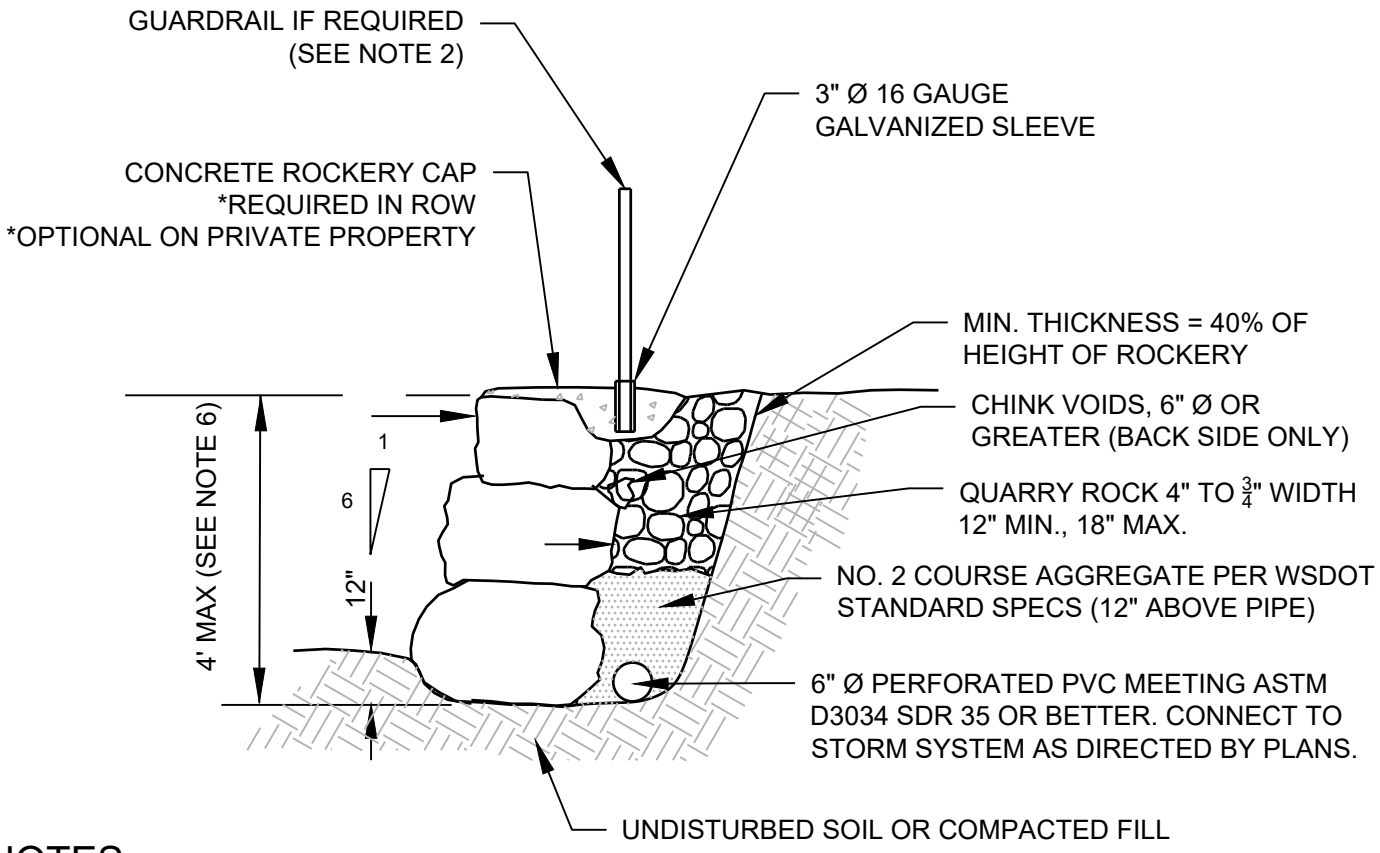

NOTES

1. INTERLOCK ROCKS SO THAT EACH ROCK HAS A MINIMUM OF THREE BEARING SURFACES.
2. ROCKERIES GREATER THAN 30 INCHES ABOVE GRADE SHALL BE PROTECTED BY A GUARDRAIL. TYPE TO BE DETERMINED BY THE MOST CURRENT EDITION OF THE INTERNATIONAL BUILDING CODE. RAILING APPROVAL SHALL BE BY THE CITY BUILDING OFFICIAL.
3. DENSITY OF ROCK MATERIAL SHALL BE A MINIMUM OF 160 POUNDS PER CUBIC FOOT.
4. THE CONTRACTOR SHALL USE THE ROCK SIZES AS SET FORTH IN THE ATTACHED TABLE AND SHALL INSURE A DISTRIBUTION OF ROCK SIZES WITH THE LARGEST ROCKS ON THE BOTTOM AND PROGRESSIVELY SMALLER ROCKS ON TOP.
5. VOIDS IN THE ROCKERY FACE SHALL NOT BE GREATER THAN 50 SQUARE INCHES FOR ROCKS OVER 3 FEET HIGH AND 36 SQUARE INCHES FOR ROCKS UNDER 3 FEET HIGH.
6. ROCKERIES OVER FOUR (4) FEET HIGH SHALL BE DESIGNED BY A GEOTECHNICAL ENGINEER LICENSED IN THE STATE OF WASHINGTON AND REQUIRES A BUILDING PERMIT WITH THE CITY OF MONROE.

ROCK SIZES			
SIZE	APPROXIMATE WEIGHT	MINIMUM DIMENSIONS	APPROXIMATE VOLUME
ONE-MAN ROCK	160 TO 400 LB	12 INCHES	1.75 CF
TWO-MAN ROCK	500 TO 800 LB	13 INCHES	4.00 CF
THREE-MAN ROCK	900 TO 1,200 LB	16 INCHES	6.60 CF
FOUR-MAN ROCK	1,300 TO 1,600 LB	18 INCHES	9.00 CF

ROCKS LESS THAN 1 CUBIC FOOT IN VOLUME OR WEIGHING LESS THAN 160 POUNDS SHALL NOT BE USED.

MONROE WASHINGTON

DESCRIPTION
ROCKERY

DESIGNATION
321

SCALE
NOT TO SCALE

REVISED
FEB 1, 2024

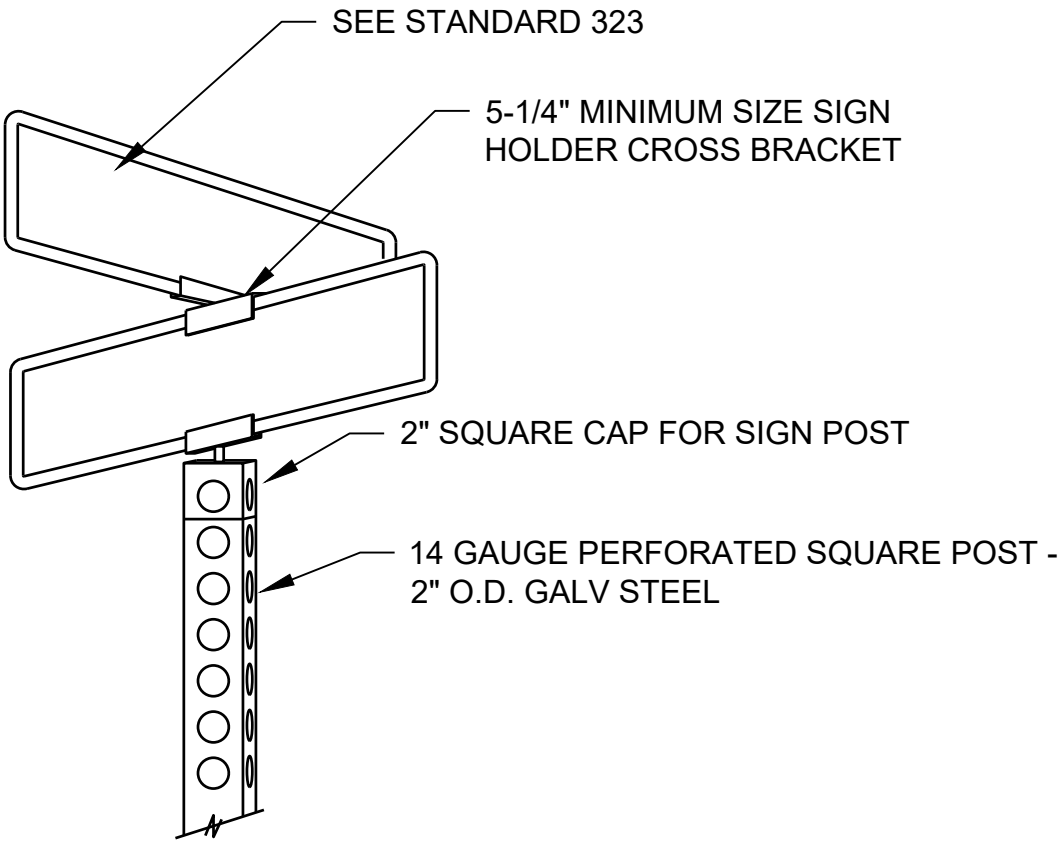

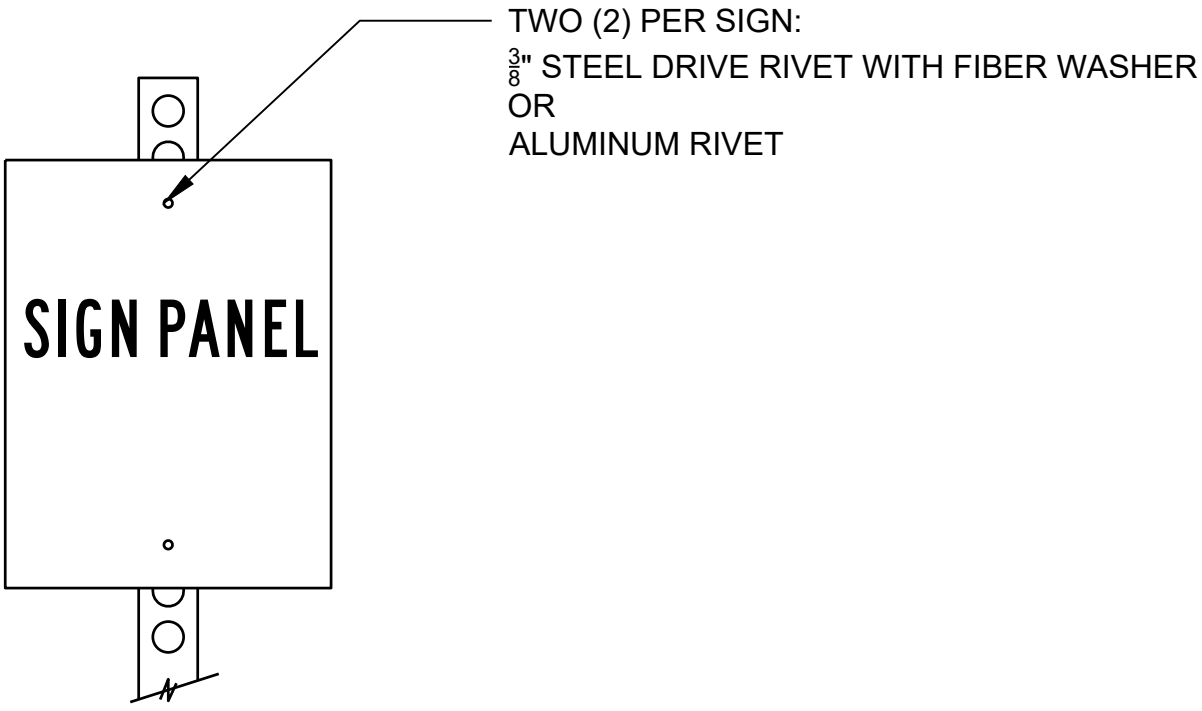

MONROE WASHINGTON

DESCRIPTION

STREET SIGN MOUNTING DETAIL

DESIGNATION

322

SCALE

NOT TO SCALE

REVISED

FEB 1, 2024

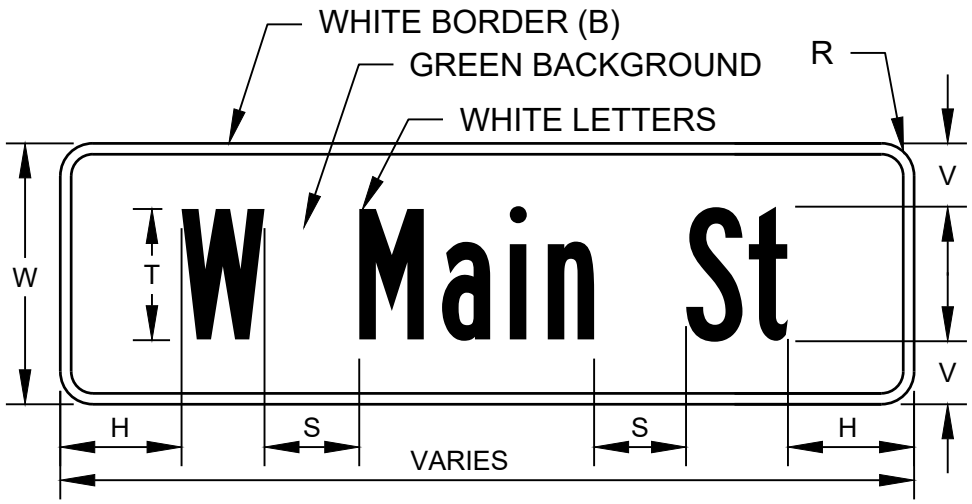

SEE NOTE 5	W	T	V	H	S	B	R
>25 POSTED MPH	12"	6"	3"	4.5" MIN	4.5"	0.5"	1.5"
≤ 25 POSTED MPH*	8"	4"	2"	3" MIN	3"	0.375"	1.0"

*SEE NOTE 5





NOTES:

1. TEXT SHALL BE AS SHOWN WITH STANDARD HIGHWAY SERIES B LETTERS AND NUMBERS.
2. MATERIAL SHALL BE ANODIZED ALUMINUM SHEET STOCK. STOCK THICKNESS SHALL BE 0.08" FOR SIGNS SHORTER THAN 36" LONG. SIGNS 36" OR LONGER STOCK THICKNESS SHALL BE 0.125".
3. BACK SIDE OF SIGN TO BE THE SAME AS THE FRONT.
4. SIGNS SHALL BE TYPE 4 HIGH INTENSITY PRISMATIC FOR RETRORELECTIVITY.
5. WHERE TWO DIFFERENT CLASSIFICATIONS OF ROADWAY INTERSECT THE LARGER SIGN FONT SHALL BE USED ON ALL SIGNS.
6. THE NOMINAL LOOP HEIGHT OF THE LOWER CASE LETTERS SHALL BE $\frac{3}{4}$ OF THE HEIGHT OF THE INITIAL UPPER CASE LETTER.

MONROE WASHINGTON

DESCRIPTION
STREET SIGN

DESIGNATION
323

SCALE
NOT TO SCALE

REVISED
FEB 1, 2024

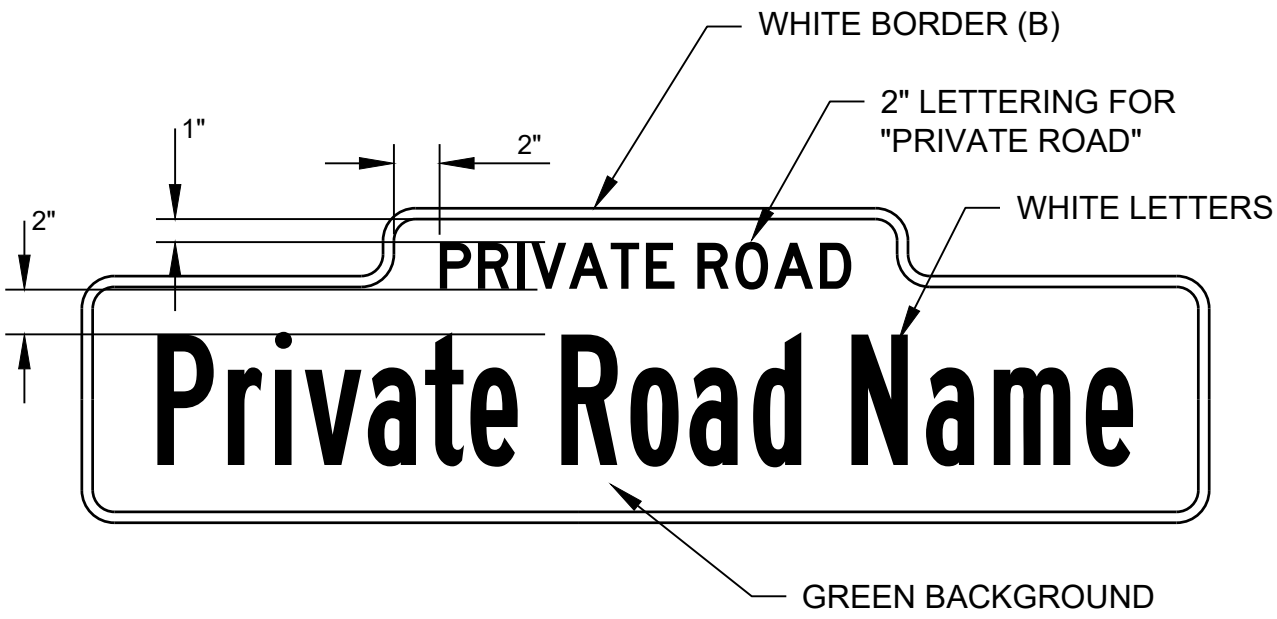

NOTES:

1. "PRIVATE ROAD" SHALL BE CENTERED ON THE STREET SIGN.
2. MATERIAL SHALL BE ANODIZED ALUMINUM SHEET STOCK. STOCK THICKNESS SHALL BE 0.08" FOR SIGNS SHORTER THAN 36" LONG. SIGNS 36" OR LONGER STOCK THICKNESS SHALL BE 0.125".
3. BACK SIDE OF SIGN TO BE THE SAME AS THE FRONT.
4. SIGNS SHALL BE TYPE 4 HIGH INTENSITY PRISMATIC FOR RETRORELECTIVITY.
5. THE NOMINAL LOOP HEIGHT OF THE LOWER CASE LETTERS SHALL BE $\frac{3}{4}$ OF THE HEIGHT OF THE INITIAL UPPER CASE LETTER.
6. ALL LETTERING SHALL MEET THE REQUIREMENTS ON STANDARD DETAIL 323 "STREET SIGNS."

MONROE WASHINGTON

DESCRIPTION	DESIGNATION
PRIVATE ROAD SIGN	323PR
SCALE: NOT TO SCALE	REVISED: FEB 1, 2024

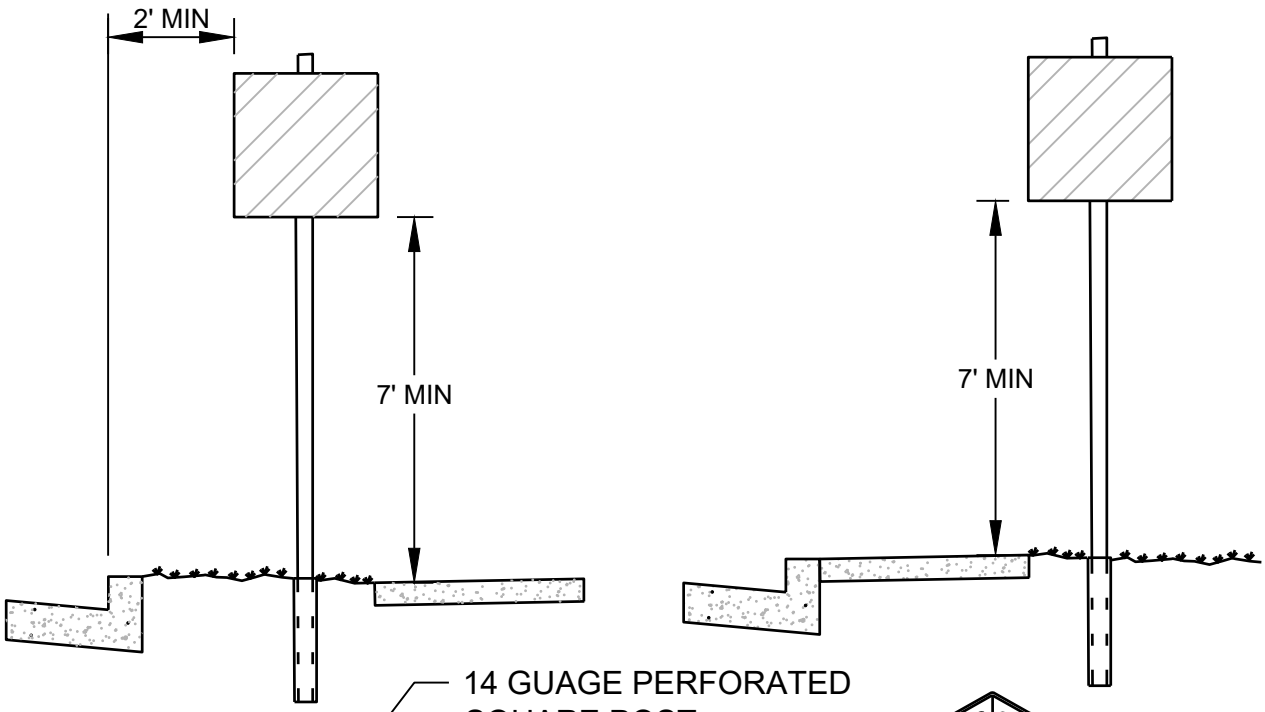

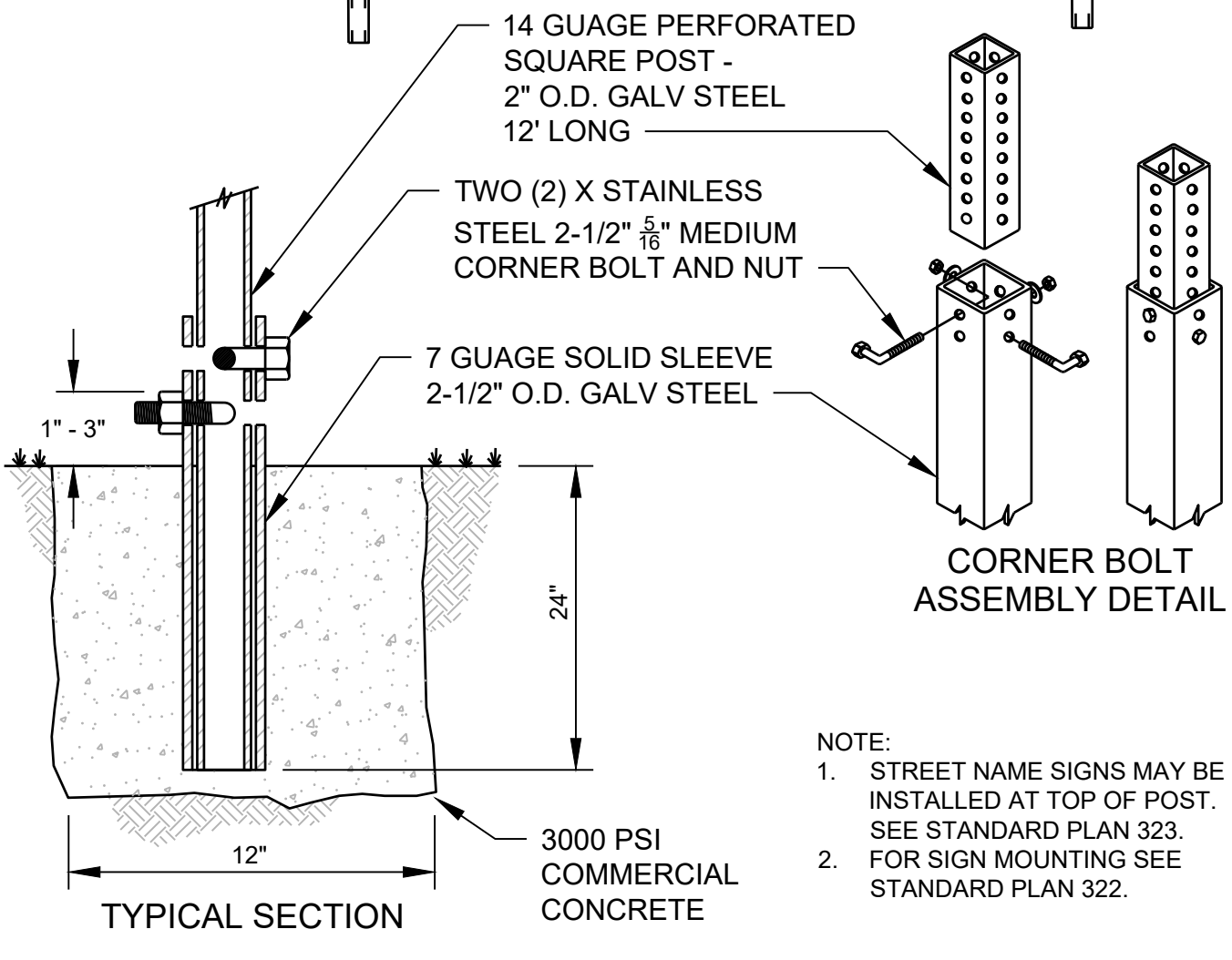

TYPICAL SECTION

CORNER BOLT ASSEMBLY DETAIL

NOTE:
1. STREET NAME SIGNS MAY BE INSTALLED AT TOP OF POST. SEE STANDARD PLAN 323.
2. FOR SIGN MOUNTING SEE STANDARD PLAN 322.

MONROE WASHINGTON

DESCRIPTION
SIGN INSTALLATION

DESIGNATION
324

SCALE
NOT TO SCALE

REVISED
FEB 1, 2024

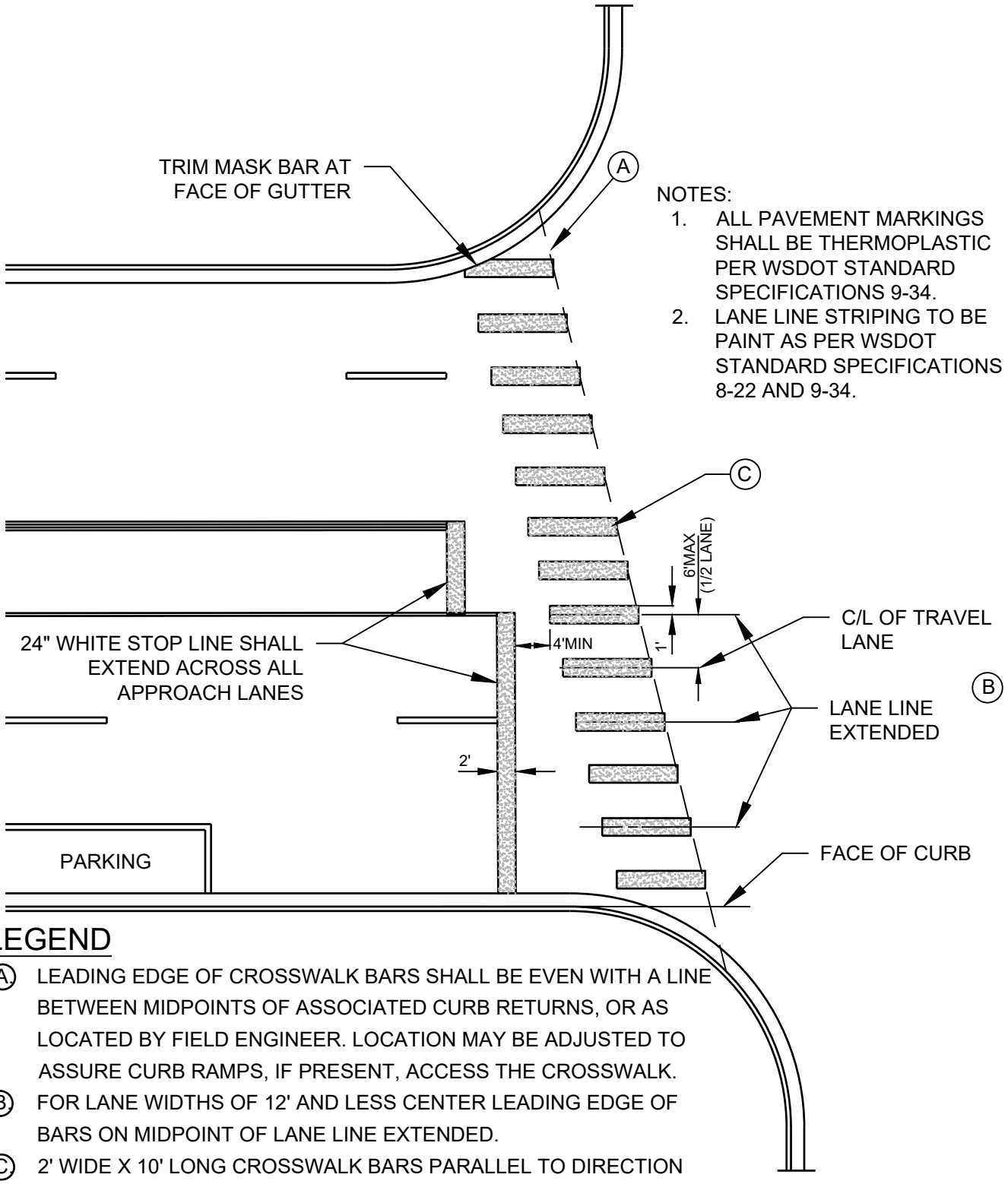

LEGEND

Ⓐ LEADING EDGE OF CROSSWALK BARS SHALL BE EVEN WITH A LINE BETWEEN MIDPOINTS OF ASSOCIATED CURB RETURNS, OR AS LOCATED BY FIELD ENGINEER. LOCATION MAY BE ADJUSTED TO ASSURE CURB RAMPS, IF PRESENT, ACCESS THE CROSSWALK.

Ⓑ FOR LANE WIDTHS OF 12' AND LESS CENTER LEADING EDGE OF BARS ON MIDPOINT OF LANE LINE EXTENDED.

Ⓒ 2' WIDE X 10' LONG CROSSWALK BARS PARALLEL TO DIRECTION OF VEHICLE TRAVEL WHEN DETERMINED BY CITY ENGINEER.

MONROE WASHINGTON

DESCRIPTION

STOP BAR AND CROSSWALK

DESIGNATION

325

SCALE

NOT TO SCALE

REVISED

FEB 1, 2024

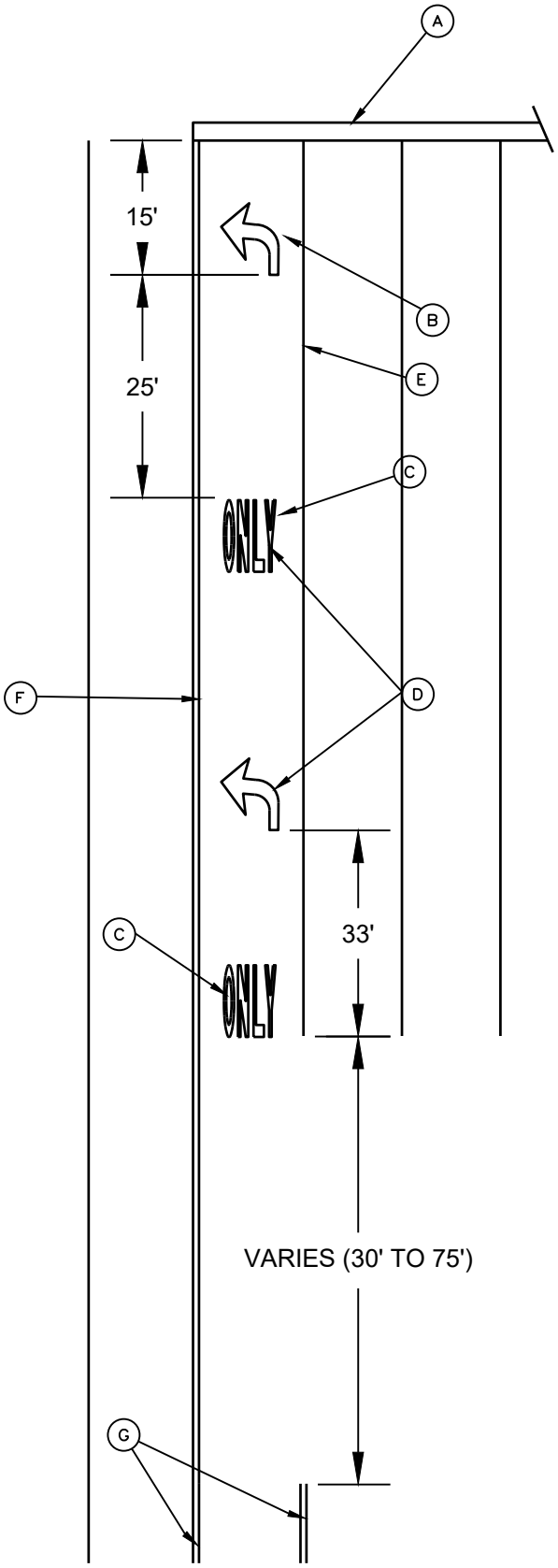

LEGEND

(A.) STOP LINE AS REQUIRED BY ENGINEER, SEE PLANS.

(B.) PAVEMENT MARKINGS PER CURRENT EDITION OF THE MUTCD.

(C.) SIZE OF LEGENDS SUCH AS "ONLY", "SCHOOL", "STOP", ETC SHALL BE PER THE CURRENT MUTCD.

(D.) INTERMEDIATE PAVEMENT MARKINGS AND LEGENDS AS REQUIRED BY ENGINEER. SEE PLANS.

(E.) 8" WHITE WIDE LANE LINE. LENGTH PER PLANS.

(F.) DOUBLE YELLOW CENTER STRIPE.

(G.) TWO WAY LEFT TURN STRIPE.

NOTES:

1. PAVEMENT MARKINGS SHALL CONFORM WITH WSDOT STANDARD SPECIFICATIONS 8-22 AND 9-34.
2. STANDARD WIDTH LANE LINE STRIPING TO BE PAINT. WIDE LANE LINES SHALL BE THERMOPLASTIC.
3. ALL PAVEMENT SYMBOLS AND LETTERING SHALL BE THERMOPLASTIC.

MONROE WASHINGTON

DESCRIPTION

LEFT TURN POCKET

DESIGNATION

326

SCALE

NOT TO SCALE

REVISED

FEB 1, 2024

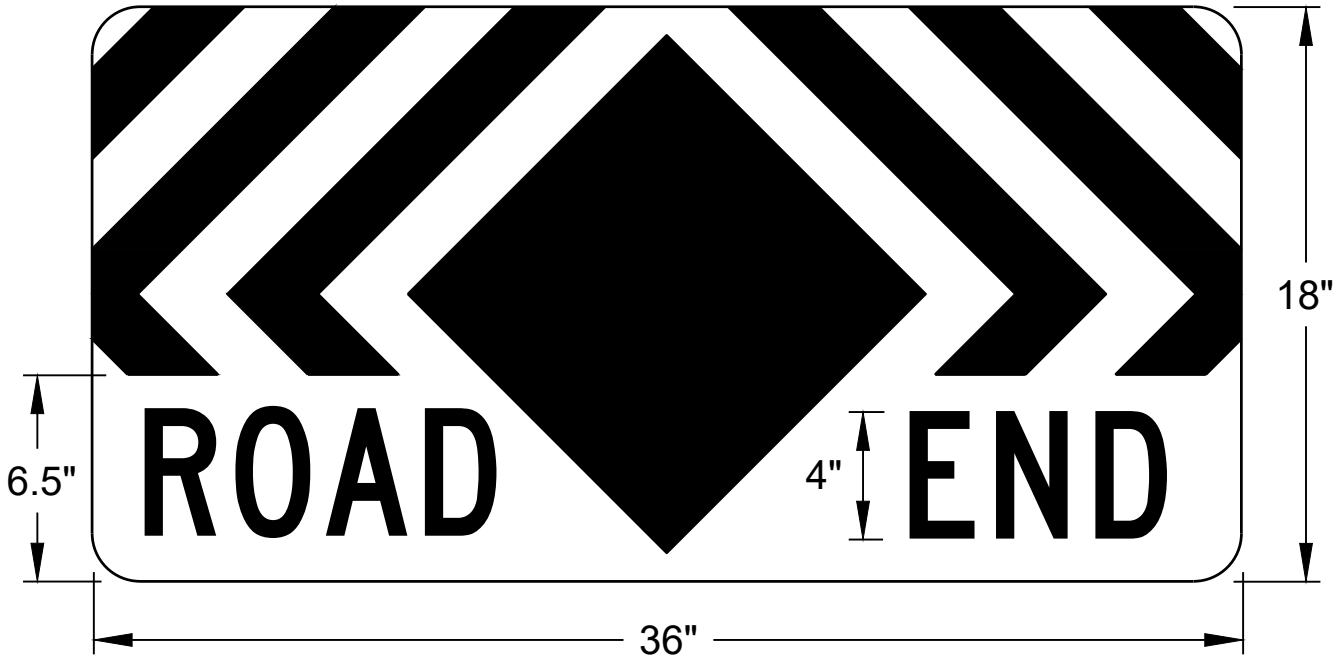

NOTES

1. BACKGROUND SHALL BE WHITE. TEXT AND SYMBOLS SHALL BE RED.
2. TEXT SHALL BE HIGHWAY SERIES B.
3. CENTER DIAMOND IS A SQUARE WITH 11.5" SIDES.
4. CHEVRONS ARE 2" THICK. SPACE BETWEEN CHEVRONS IS 2".
5. SEE STANDARD DETAILS 322 AND 324 FOR SIGN POST INSTALLATION.

MONROE WASHINGTON

DESCRIPTION

CITY OF MONROE "ROAD END" SIGN

DESIGNATION

327

SCALE

NOT TO SCALE

REVISED

FEB 1, 2024



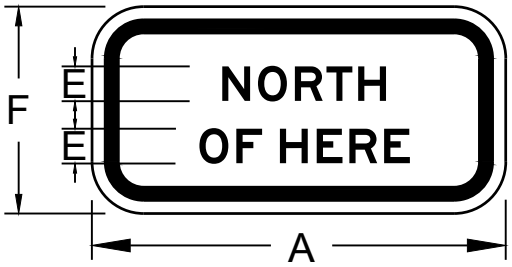





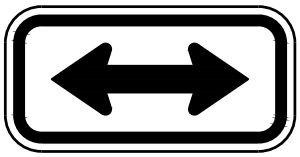







DIMENSIONS (INCHES/HIGHWAY FONT)						
A	B	C	D	E	F	G
12	18	2B	3C	1E	6	3B

NOTES

1. NO PARKING SIGNS SHALL CONFORM WITH MUTCD PARKING, STANDING, AND STOPPING REGULATORY SIGNS (R7 AND R8 SERIES).
2. BACKGROUND SHALL BE WHITE. TEXT AND SYMBOLS SHALL BE RED.
3. TEXT SHALL BE PER WSDOT SIGN FABRICATION MANUAL M55-05.
4. SEE STANDARD DETAILS 322 AND 324 FOR SIGN MOUNTING DETAILS AND SIGN POST INSTALLATION.
5. SEE STANDARD DETAIL 323 FOR SIGN MATERIAL SPECIFICATIONS.
6. SIGN SHALL HAVE A $\frac{3}{8}$" MARGIN AND A $\frac{3}{8}$" BORDER.
7. SIGNS SHALL BE MOUNTED AT 90° TO THE CURB LINE.
8. IF SIGN CONTAINS ARROWS THE SIGN SHALL BE PLACED AT AN ANGLE BETWEEN 30° AND 45° WITH THE TRAFFIC FLOW.
9. SIGNS MOUNTED AT 90° TO THE CURB LINE SHALL ONLY BE USED AT THE TRANSITION POINT BETWEEN PARKING ZONES, USE TWO SIGNS MOUNTED BACK TO BACK, AND 'THIS SIDE OF SIGN' (R7-202P) SHALL BE USED ON BOTH SIDES OF THE SIGN.

MONROE WASHINGTON

DESCRIPTION
NO PARKING SIGNS

DESIGNATION
328

SCALE
NOT TO SCALE

REVISED
FEB 1, 2024

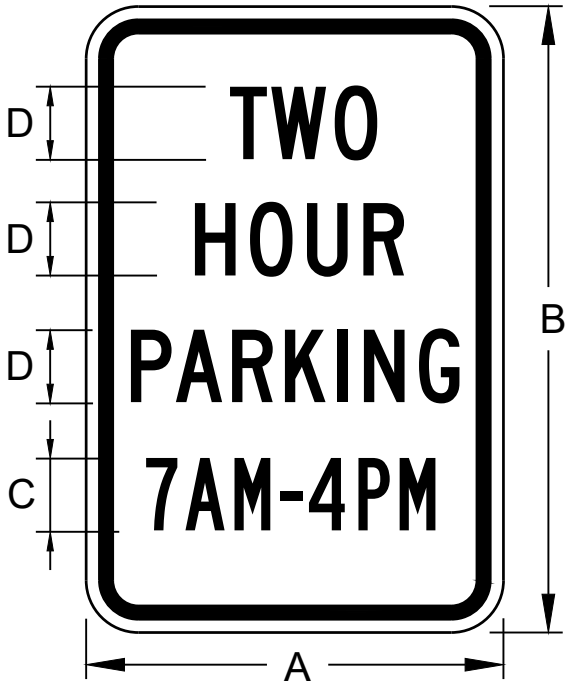



DIMENSIONS (INCHES/HIGHWAY FONT)						
A	B	C	D	E	F	G
12	18	2B	2C	4C	3B	1.5B



NOTES

1. NO PARKING SIGNS SHALL CONFORM WITH MUTCD PARKING, STANDING, AND STOPPING REGULATORY SIGNS (R7 AND R8 SERIES).
2. BACKGROUND SHALL BE WHITE. TEXT AND SYMBOLS SHALL BE GREEN.
3. TEXT SHALL BE PER WSDOT SIGN FABRICATION MANUAL M55-05.
4. SEE STANDARD DETAILS 322 AND 324 FOR SIGN MOUNTING DETAILS AND SIGN POST INSTALLATION.
5. SEE STANDARD DETAIL 323 FOR SIGN MATERIAL SPECIFICATIONS.
6. SIGN SHALL HAVE A $\frac{3}{8}$" MARGIN AND A $\frac{3}{8}$" BORDER.
7. SIGN SHALL BE MOUNTED AT 90° TO THE CURB LINE.

MONROE WASHINGTON

DESCRIPTION
PERMISSIVE PARKING SIGN

DESIGNATION
329

SCALE
NOT TO SCALE

REVISED
FEB 1, 2024

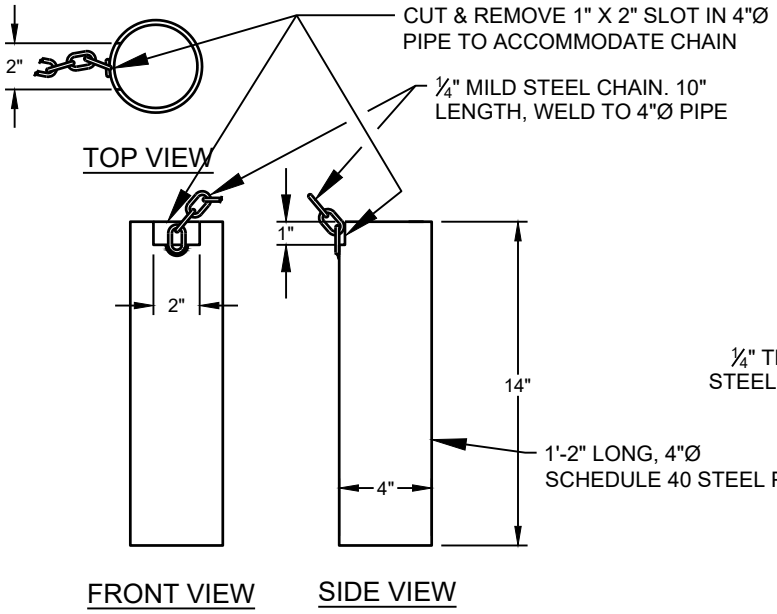

GALVANIZED PIPE SLEEVE

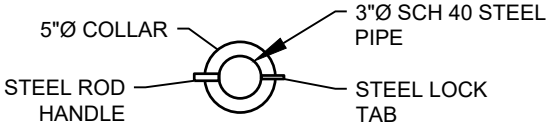

BOLLARD PLAN VIEW

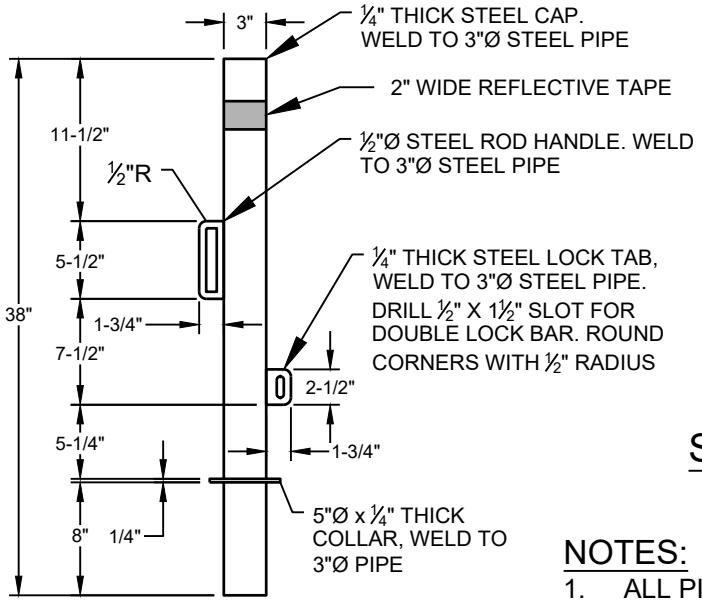

BOLLARD ELEVATION

BOLLARD

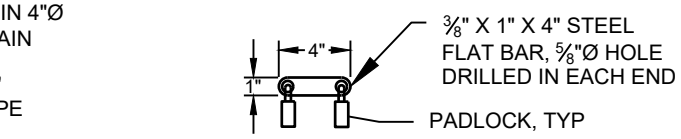

OPTIONAL DOUBLE LOCK BAR

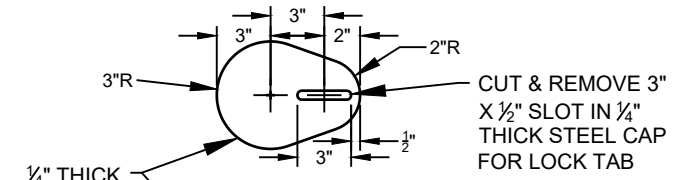

LID - TOP VIEW

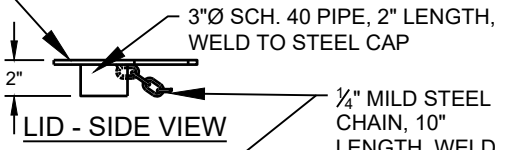

LID - SIDE VIEW

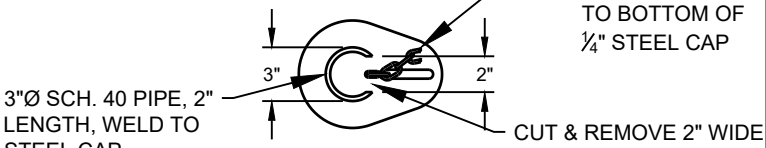

LID - BOTTOM VIEW

STEEL LID

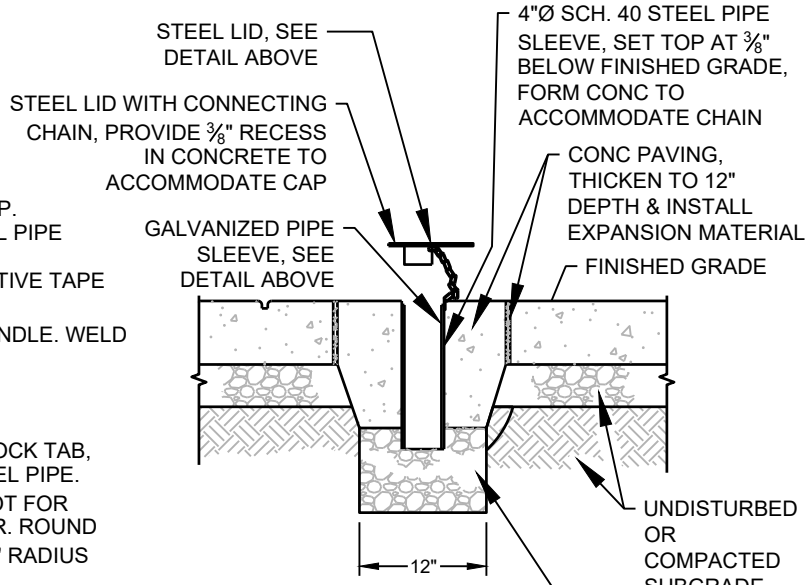

SLEEVE IN CONCRETE SECTION VIEW

NOTES:

1. ALL PIPE SECTIONS MUST BE CONSTRUCTED OF SCHEDULE 40 STEEL PIPE AND ALL COMPONENTS MUST BE HOT DIPPED GALVANIZED AFTER FABRICATION.
2. BOLLARD MUST NOT EXCEED 50 LBS.

MONROE WASHINGTON	DESCRIPTION: BOLLARD	DESIGNATION: 330
	SCALE: NOT TO SCALE	REVISED: FEB 1, 2024

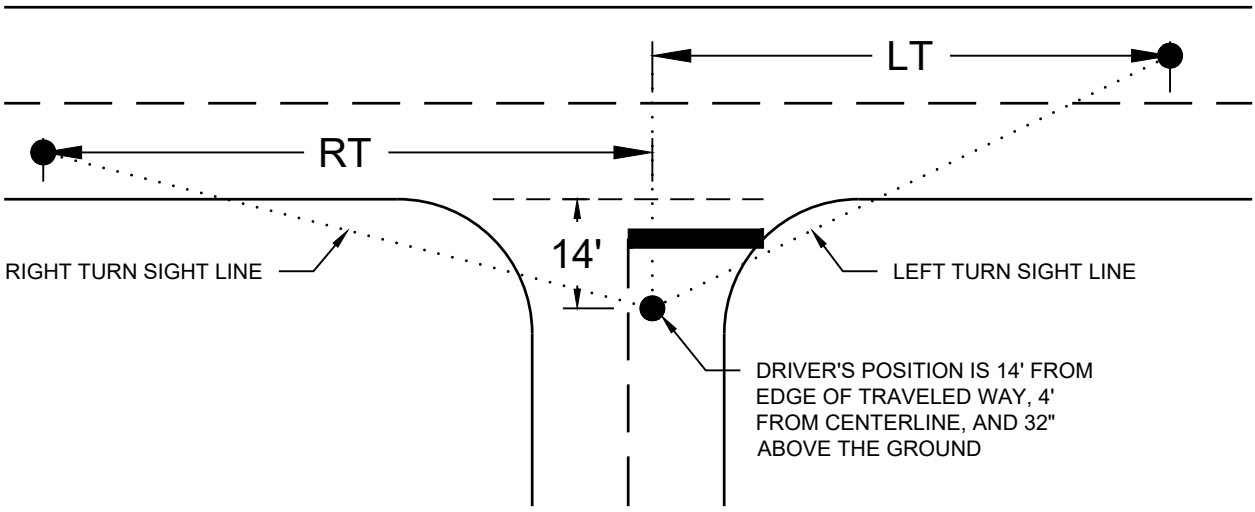

SIGHT DISTANCES (IN FEET)		
POSTED MPH	RT	LT
25 MPH	280	240
30 MPH	335	290
35 MPH	390	335
45 MPH	500	430

MONROE WASHINGTON

DESCRIPTION

SIGHT LINES, STOP CONTROLLED INT.

DESIGNATION

331

SCALE

NOT TO SCALE

REVISED

FEB 1, 2024

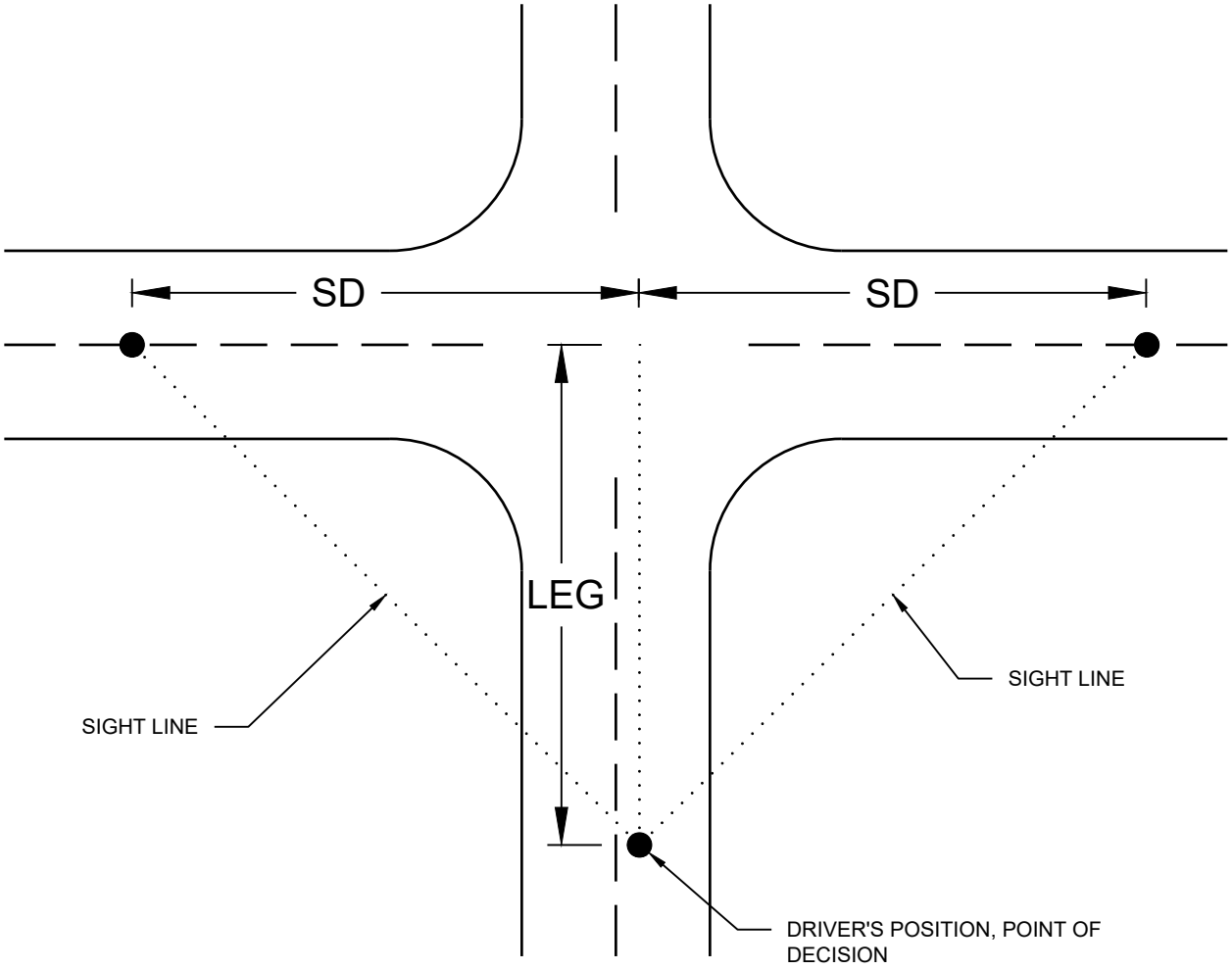

SIGHT DISTANCES (IN FEET)		
POSTED MPH	SD	LEG
25 MPH	240	130

MONROE WASHINGTON

DESCRIPTION

SIGHT LINES, UNCONTROLLED INT.

DESIGNATION

332

SCALE

NOT TO SCALE

REVISED

FEB 1, 2024

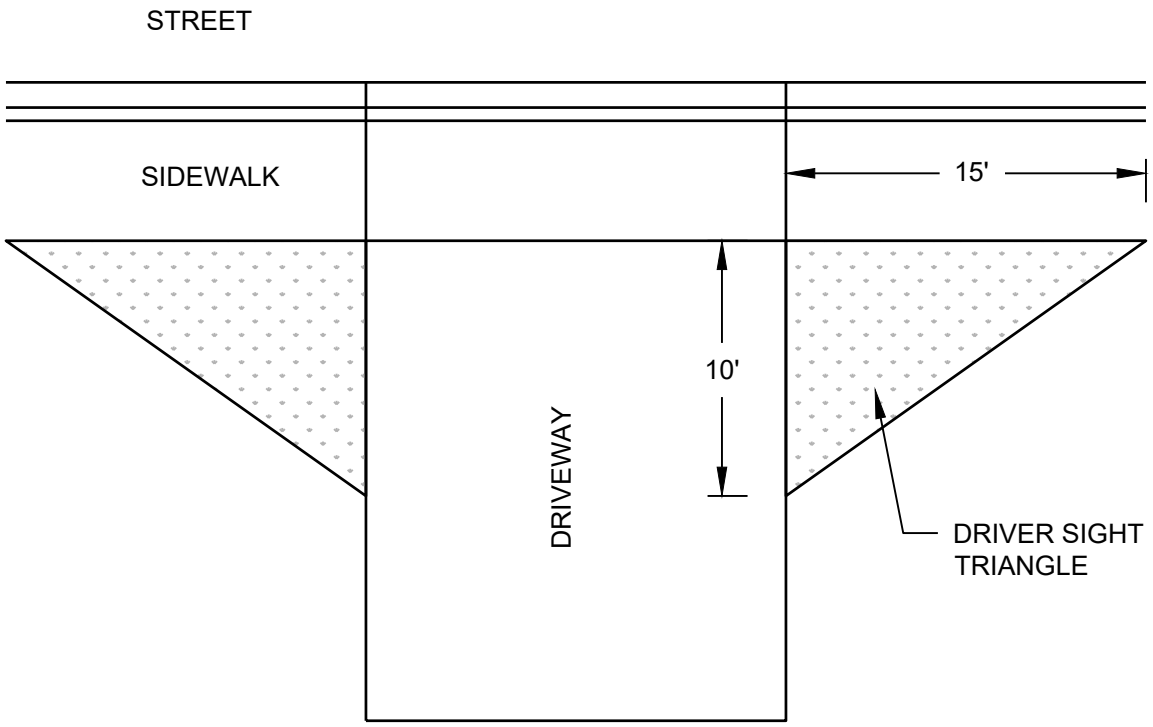

NOTES

1. DRIVER SIGHT TRIANGLE SHALL BE KEPT CLEAR OF SIGHT OBSTRUCTIONS.
2. FENCES, SHRUBS, PLANTINGS AND ALL OTHER SIGHT OBSTRUCTIONS SHALL BE LIMITED TO 42" TALL.

MONROE WASHINGTON	DESCRIPTION SIGHT LINES DRIVEWAY	DESIGNATION 333
	SCALE NOT TO SCALE	REVISED FEB 1, 2024

CITY OF MONROE PUBLIC WORKS
DESIGN, CONSTRUCTION AND OPERATIONS STANDARDS

SECTION 4
STORM AND SURFACE WATER

TABLE OF CONTENTS

4.1 GENERAL REQUIREMENTS 1

4.1.1 APPLICABILITY 2
4.1.2 OWNERSHIP 2
4.1.3 SITING, EASEMENTS, AND TRACTS 2
4.1.4 STORM DRAINAGE DESIGN 3
4.1.5 PERMITS 5
4.1.6 ILLICIT DISCHARGES 6
4.1.7 MAINTENANCE 5
4.1.8 EMERGENCY OVERFLOW 6
4.1.9 OFF SITE INVESTIGATION 6

4.2 CONSTRUCTION PLANS 6

4.3 EXISTING UTILITIES 8

4.4 TRENCH EXCAVATION, BEDDING, AND BACKFILL FOR STORMWATER PIPE 9

4.4.1 SECTION DESCRIPTION 9
4.4.2 GENERAL REQUIREMENTS 9

4.5 INSPECTIONS AND APPROVAL 9

4.5.1 CONSTRUCTION AND MAINTENANCE INSPECTIONS 9
4.5.2 CCTV REQUIREMENT 10
4.5.3 FINAL APPROVAL 11

4.6 STANDARD STORM DRAWINGS 13

CITY OF MONROE PUBLIC WORKS
DESIGN, CONSTRUCTION AND OPERATIONS STANDARDS

SECTION 4
STORM AND SURFACE WATER

4.1 GENERAL REQUIREMENTS

The City of Monroe storm drainage utility service area includes the area within the City of Monroe city limits. The storm drainage utility is implemented in accordance with MMC 15.02 and 23.40, and the National Pollution Discharge Elimination System (NPDES) Phase II Permit, amended in 2014.

The purpose of this chapter is to provide for and promote the health, safety, and welfare of the general public through sound development policies and construction procedures which respect and preserve the City's storm drainage and watercourses; to minimize water quality degradation and control of sedimentation of creeks, streams, ponds, lakes, and other water bodies; to preserve and enhance the suitability of waters for recreation and fish habitat; to preserve and enhance the aesthetic quality of the waters; to maintain and protect valuable groundwater quantities, locations, and flow patterns; to ensure the safety of City roads and rights-of-way; and to decrease drainage-related damages to public and private property.

Design and construction of storm drainage systems must conform to the Monroe Standards and Specifications, and the Department of Ecology Stormwater Management Manual as adopted by the City, the NPDES Phase II Permit with associated Technical Appendices, and the WSDOT Highway Runoff Manual. If inconsistencies occur, the Monroe Standards will have precedence.

The City encourages the use of Low Impact Design (LID) storm drainage features and will encourage LID implementation as part of Capital Projects and new public and private developments. LID designs will be reviewed on a case-by-case basis in accordance with the Technical Appendix 1 of the NPDES Phase II Permit. LID infiltration and dispersion measures must be designed to minimize potential negative impacts to adjacent properties.

Storm drainage system improvements may be required when the existing collection and conveyance system is not adequate for the proposed use because of on-site or off-site inadequacy including, but not limited to, age, pipe diameter, type, slope, and roughness. The improvements must be consistent with the Monroe Standards for new construction.

The standards established by this chapter are intended to represent the minimum design standards for the construction of storm drainage facilities. Compliance with these Standards does not relieve the designer of the responsibility to apply conservative and sound professional engineering judgment to protect the health, safety, and welfare of the general public. Special site conditions and environmental constraints may require a greater level of protection than would normally be required under these Standards. The designer must apply these Standards bearing in mind these constraints.

4.1.1 Applicability

All persons taking the following actions or applying for any of the following permits and/or approvals may be required to submit for approval a stormwater plan with their application and/or request:

1. New development;
2. Redevelopment;
3. Building permit;
4. Subdivision or Short subdivision approval;
5. Commercial, industrial, or multifamily site plan approval;
6. Conditional use permits, Site Plan Review permits;
7. Substantial development permit required under RCW 90.58 (Shoreline Management Act);
8. Right-of-Way use;
9. Logging, clearing, and other land disturbing activities;
10. Projects that discharge stormwater directly, or immediately adjacent, to a floodplain, stream, lake, and wetland or closed depression, erosion or landslide hazards area, or other critical area as defined by MMC 22.80 Critical areas.

4.1.2 Owner

Storm drainage facilities that are located on private land and have drainage basins that serve only private land shall be owned, operated, and maintained by the landowner or owner's association. Examples include commercial shopping centers and residential or mixed-use developments with no public roads. Storm drainage facilities that serve public roads or rights-of-way are owned, operated and maintained by the City. In most cases, the underlying land will be in a private tract owned by the landowner or owner's association. In some situations, the tract of land containing the drainage facility also provides recreation amenities for the project, especially if stormwater detention is provided by an underground vault. In these situations, all landscape and non-drainage facility maintenance will be the responsibility of the landowner or owner's association. For projects that include the recording of a plat or binding site plan or similar land-use instrument, the maintenance obligations will be defined on the recording document and evaluated on a case-by-case basis by the Director.

4.1.3 Siting, Easements, and Tracts

All storm drainage systems owned and/or maintained by the City of Monroe outside of the right-of-way must be in an easement dedicated to the City of Monroe.

All privately owned and maintained storm drainage systems must be located wholly outside of the public right-of-way, include covenants and restrictions requiring annual system maintenance by the owner, annual inspection and reporting to the City by the owner, and access easements for City inspection. In addition, private storm drainage facilities in single-family residential neighborhoods are to be located in a private tract with exclusive use for storm drainage unless uses that do not impact stormwater function, such as public open space or amenities above stormwater vaults, are otherwise approved as part of a development permit.

Storm drainage easements must be exclusive for storm drainage facilities. Private storm drainage flow control and water quality facilities must not be located in dedicated public road right-of-way areas.

All storm drainage construction must be staked prior to construction to ensure placement within designated easements. All stormwater facilities dedicated to the City must be located entirely within dedicated right-of-way, tract, or approved easement.

Easements of publicly maintained storm drainage closed conveyance systems or open channel will be 20 feet in width.

Private easements will be required if conveyance must occur across private properties.

No structures shall be erected within any public drainage easement. Construction of a permitted fence across an easement will be considered on a case-by-case basis.

4.1.4 Storm Drainage Design

All proposed public and private storm drainage systems must be designed, signed, and stamped by a professional engineer, registered with the state of Washington. The design must be consistent with the DOE Stormwater Manual as adopted by the City of Monroe, and the City comprehensive Plan. The designer must meet all applicable federal, state, and local water quality standards prior to discharge to any wetland, stream, river, lake, or other critical area.

The installation of storm drainage improvements must be in accordance with the approved construction plans. Any significant changes to the approved plans are to be reviewed and approved in writing by the Director before the changes are incorporated into the work.

4.1.4.1 Trees & Plants

The location and species of all plants and trees to be installed in and around storm drainage facilities are required to be called out on the plans for the facility or project landscape plan.

No willows, poplars, cottonwoods, birches, soft maple, gum, or any other tree or shrub whose roots are likely to obstruct stormwater functions are allowed within 30 feet of any stormwater pipes or facilities. Any of these trees found to be located within 30 feet of a proposed stormwater pipe or facility must be removed at the Developer's expense. Any of these trees planted or established within 30 feet of constructed stormwater pipes or facilities must be removed by the property owner or owners association.

4.1.4.2 Catch Basins & Maintenance Holes

1. Dumpsters and Dumpster Enclosures – no catch basins are to be located under dumpsters, in dumpster enclosures, or designed to capture runoff from dumpsters. Run off from these types of enclosures are to be directed to the sanitary sewer system and as approved by the Director.

2. Manholes in residential backyards must be with a solid bolt locking lid.
3. Lids in the Roadway - Where possible, installing lids in wheel paths must be avoided. Round lids are required in travel lanes with the exception of gutters where square lids are acceptable.
4. Locking Lids - Bolted lids are preferred over locking lids, which require a specific key for access.
5. Type 1 catch basin rim to flow line elevation is not to exceed 5 feet.
6. Catch Basin grates – Grates and covers shall be ductile iron as per standard details 405, 406 A, 406 B, and 406 C.

4.1.4.3 Control Structures

Control Structures must be located in their own type II structure with an access port directly over top of the control to allow exterior inspection without confined space entry.

4.1.4.4 Detention Facilities

The construction plans are to indicate that the detention facility is privately or publicly maintained.

4.1.4.5 Fish Passage Culverts

Developers must refer to Monroe Municipal Code (MMC), Department of Fish and Wildlife and NPDES Phase 2 Requirements for local fish passage culvert requirements. Conveyance standards detailed above may need to be changed to accommodate fish passage pursuant to MMC 15.01.

4.1.4.6 LID/Flow control BMPs

LID/Flow Control BMP Facility Conditions

Type	A Flow Control BMP Facility
ALL	BMPs must be shown on building permits and as-built plans. Pre-treatment is required prior to all LID / FLOW CONTROL BMPs. At minimum, a Type 1 catch basin with a sump. Failure of on-lot LID facilities requires replacement of facility and/or detention volume. Direct connection to the storm system is not an allowed solution. Emergency overflow BMPs are required to be located on the same lot or tract as the Flow Control BMP. On-lot BMPs not constructed as part of the plat require a separate covenant prior to final building permit approval.
Full Dispersion	Dispersion flowpath area must be contained within a restricted easement.
Full Infiltration	Ensure adequate spacing from existing and new trees to allow for tree growth. Infiltration facilities are to remain outside of the dripline of all trees. No BSBL or setback reduction without an approved Deviation.

Type	A Flow Control BMP Facility
Limited Infiltration	Ensure adequate spacing from existing and new trees to allow for tree growth. Infiltration facilities are to remain outside of the dripline of all trees. No BSBL or setback reduction allowed without an approved Deviation.
Basic Dispersion	Dispersion flowpath area must be contained within a restricted easement.
Bioretention	No utility crossings allowed under infiltrative BMPs without approval and use of impermeable utility crossing backfill.
Permeable pavement (unlined with no underdrain)	Not allowed in public right-of-way unless otherwise approved by the Director.
Grassed modular grid pavement	Plastic gridded style pavers not allowed unless demonstrated to be damage resistant with backfill that will not escape and travel under traffic.
Rainwater harvesting	Must ensure adequate cross connection separation and sewer discharge accommodations.
Minimum disturbance foundation	No additional conditions.
Open grid decking over pervious area	Allowed for ground floor decks. Second story applications will be considered impervious.
Perforated pipe connection	Not allowed in critical drainage areas.

4.1.4.7 Connection Points

1. Cul-de-sacs must contain a sufficient quantity of catch basins to act as connection points for adjacent homes and buildings.
2. When a catch basin is installed adjacent to a sidewalk with an upslope area behind it, rigid perforated PVC drainage pipe must be installed behind the sidewalk to collect seepage and to allow for connection by adjacent properties.

4.1.4.8 Conveyance Design

Conveyance design must account for backwater conditions, needs for energy dissipation, and provide an overflow path should the system overtop flow. For example, 90-degree turns of mainlines at the base of a hill will not be allowed. On slopes greater than 15 percent, pipes may require anchors and catch basins will require energy dissipation, as directed by the reviewer.

When connecting pipe segments of different materials, the installation of a structure will be required.

4.1.5 Permits

In addition to the appropriate permits listed in Section 1, permits may be required by the Washington State Department of Fish and Wildlife, Department of Ecology, Army Corps

of Engineers, or Snohomish County. The Developer must submit copies of the approved permits to the City.

4.1.6 Illicit Discharges

Illicit discharges to the storm drainage system, or surface water, is prohibited in accordance with MMC 13.34.

4.1.7 Maintenance

The frequency and ease of future maintenance shall be thoroughly considered during the design of storm water facilities. Design adjustments to ease maintenance shall be a major consideration.

4.1.8 Emergency Overflow

Emergency overflow provisions must be installed in such a manner as to direct waters away from all structures without causing failure of those structures. The impact of a system failure should be analyzed both in terms of on-site and off-site effects. Adverse impacts must be avoided with respect to adjacent properties, elements of the public drainage system or other private systems, and critical areas. Retention/detention and infiltration facility design must take into account overflows, which may result from:

1. Higher-intensity or longer-duration storms than the design storm;
2. Plugged orifices;
3. Inadequate storage due to sediment buildup;
4. Debris blockage; or
5. Other reasons causing system failure.

4.1.9 Off Site Investigation

If drainage complaints are found within ¼ mile of the project, an offsite analysis and mitigation is required to be conducted during the wet season.

Conduct an off-site analysis of downstream water quality impacts and mitigate such impacts.

The analysis shall extend a minimum of a 1/4 mile downstream from the project.

The potential impacts to be evaluated shall include, but not be limited to, the following:

1. Excessive Sedimentation.
2. Stream bank Erosion
3. Capacity of the existing storm water management infrastructure.
4. Discharges to ground water contributing to recharge zones.
5. Violations of water quality standards.
6. Spills and discharges of priority pollutants.

4.2 CONSTRUCTION PLANS

Construction Plan Requirements

1. Show existing topographic information, including existing structures, vegetation and significant trees, critical areas, existing drainage systems, road right of way limits, property lines, easements, slope setback requirements and other features that will assist in understanding site conditions.
2. Show plan and profile views of all storm drains on 24x36 sheets. Combine with roadway or street improvements. Provide flow directional arrows on pipe runs in plan view. Show crossing pipe information on storm profile views (e.g. pipe size and utility identification).
3. Provide notes referring to specific City Standards for catch basins, manholes, grates and restrictors.
4. On profile sheets, indicate elevations for all inlets and outfalls, grades, structure rim and invert elevations.
5. Storm drainage facilities must be designed and constructed in accordance with an approved Drainage Report and contain necessary information on the plan, profile and detail views (e.g., orifice size and elevations, standard detail references).
6. All on-site and off-site improvements must be shown. Existing and proposed improvements, included in half tone background to show their relative locations, must be depicted including sewer, water, roadway, and landscape construction.
7. Plans must show existing and proposed easements where facilities are on private property. All easements must be executed prior to final construction approval. All easements on the plans are to be noted Public or Private.
8. Before any construction begins, the Developer must complete a pre-construction meeting and provide the City with the name and contact information for the person in charge who can be contacted 24 hours a day regarding construction related problems. The sites CESCL contact information shall be required to be shown at the preconstruction meeting.
9. All stormwater drainage pipe must be designed and constructed to provide gravity flow for drainage associated with the project, include depth and capacity for proposed upstream development, and be located at a depth of at least two feet below the ground surface. Minimum required velocity for full pipe flow is three (3) feet per second. Minimum pipe slope shall be as follows:

Pipe Diameter	Minimum Slope
6”	2.0%
8”	1.0%
12” and greater	0.5%

10. All storm drainage pipe and culverts within the public right-of-way must be minimum 12” diameter. Pipe penetrations into drainage structures shall be limited based on the following table:

Pipe Sizing to Basins

	Pipe Size								
Basin Type	**6”**	**8”**	**12”**	**15”**	**18”**	**24”**	**30”**	**36”**	**48”**
Yard Drain	X								
Curb Inlet	X	X							
Type I CB	X	X	X	X					
Type II CB	X	X	X	X	X				
Type II 48” CB	X	X	X	X	X	X	X		
Type II 54” CB	X	X	X	X	X	X	X	X	
Type II 72” CB	X	X	X	X	X	X	X	X	X

11. Storm drainage pipe from 18 to 24 inches in diameter must be PVC ASTM F-679 SDR-35 pipe and storm drainage pipe greater than 24 inches in diameter will be reviewed on a case-by-case basis. No drainage pipe must be allowed at a depth of less than 12 inches below the ground surface. Above ground conveyance pipe must be approved by the Public Works Director and must be minimum High Density Polyethylene Pipe (HDPE) SDR-11 with an approved engineered anchoring system.
12. Corrugated metal pipe detention tanks, culverts, and other improvements are not allowed within public facilities unless approved by the Director.
13. Black vinyl-coated chain link fence must be provided around all pond facilities. The fence must be six (6) feet high, include top-rail construction, and include vehicle and worker access gates.
14. A copy of approved construction plans must be on site during all phases of construction.
15. All new pipe connections must occur within drainage structures. Pipe cut-in, patching, and banding is not allowed.
16. General Notes for Storm Drainage and Temporary Erosion and Sediment Control Plans must be incorporated into Construction Drawings. Detention facilities are to be noted and identified as Public or Private maintained.
17. All storm drain work must be staked by survey for line and grade prior to starting construction.
18. Individual lot storm drain stubs shall be marked with a 2x4 board and labeled "storm" to be extended 10 feet onto property. A locator wire is to extend from the stub invert to top of 2x4. The 2x4 marker will indicate the storm stub depth.
19. Pipe Trash Racks. All culvert and pipe inlets 12-inch diameter or larger are to be equipped with trash racks. Smaller pipes may be equipped with trash racks where appropriate.
20. Oil-water/floatable material separators. At catch basin locations that have the potential to collect oil or floatable debris, they shall be equipped with oil-water/floatable material separating units onto the outflow storm pipes. Separator units are to be installed per Standard Detail 410 for the protection of infiltration systems and downstream public storm water flows.

4.3 EXISTING UTILITIES

The Developer must investigate and locate all buried utilities or obstructions within the construction area prior to the installation of new facilities. The Developer must establish

the field locations of the existing facilities such as water, sewer, storm drain, power, telephone, cable television, gas, and all other affected utilities.

The Developer must call for utility locates 1-800-424-5555 (or 811) a minimum of 48 hours before any excavation occurs. All services must be located before any excavation occurs.

4.4 TRENCH EXCAVATION, BEDDING, AND BACKFILL FOR STORMWATER PIPE

4.4.1 Section Description

This work must consist of excavating, bedding, and backfilling for stormwater pipe and appurtenances for both temporary and permanent installation under ordinary conditions.

4.4.2 General Requirements

Backfilling Trenches

See Standard Detail 102. The City Construction Inspector and third-party geotechnical inspector will examine excavated native material at the time of excavation to determine its suitability for use as backfill. Unsuitable backfill material will not be allowed and shall be removed and disposed of, and replaced with 5/8 inch minus crushed rock, control density fill (CDF), or with gravel borrow as approved by the City Construction Inspector.

In backfilling the trench, the Developer must take all necessary precautions to protect the pipe from any damage or shifting. Compaction in the pipe zone must be by hand tamping or with mechanical compaction as approved by the City Construction Inspector, so as not to damage the pipe. The first layer of material to be compacted must be 18 inches over the top of pipe.

Trench backfill must be spread in layers and be compacted by mechanical tampers of the impact type approved by the City Construction Inspector. Water settling will not be permitted. After the initial 18 inches of backfill is placed, the remaining backfill material must be placed in successive layers not exceeding 1-foot in loose thickness or as recommended by licensed geotechnical engineer. Each layer shall be compacted as indicated on Standard Detail 102.

During all phases of the backfilling operations and testing, as outlined herein, the Developer must protect the pipe installation, provide for the maintenance of traffic as may be necessary, and provide for the safety of property and persons.

4.5 INSPECTIONS AND APPROVAL

4.5.1 Construction and Maintenance Inspections

The Developer must request scheduling for the following inspections:

1. Temporary Erosion and Sediment Control inspection in accordance with the approved construction drawings. The TESC measures shall be in place and approved prior to beginning grading, excavations, or fill operations.

2. Rough Grading - Whenever all rough grading has been completed.
3. Trench Inspection - During placement of bedding material, and backfill of underground drainage pipe and structures. Trenching must be inspected for soft spots and inconsistencies. Periodic inspection will be as required by the City for compaction and lift thickness requirements.
4. Final Grading - When all work including installation of all drainage structure and site stabilization and compaction testing performed.
5. Planting - When erosion control planting shows active growth. The site may be inspected for compliance with planting requirements upon receiving such notice. The Inspector must inspect the work and will either approve the same or notify the Developer in what respects there has been failure to comply with the requirements of the approved plans. Any portion of the work which does not comply must be promptly corrected by the Developer. In addition, the City may make unscheduled site inspections to ensure compliance with any permit or approval and installation per these Standards.

4.5.2 CCTV Requirement

The City will not issue final acceptance of the project or release maintenance and performance bonds until all new storm lines 12-inches or larger shall be inspected by Closed Circuit Television (CCTV) camera and footage is provided to the City in a DVD or ZIP drive format. A printed paper copy of the main line pipe runs and lengths, manhole or basin numbering, tee or tap direction stationing, and any deficiencies within the pipeline must be included with the video submittal of the inspection. The City does not accept VHS tapes. CCTV operators must have Pipeline Assessment Certification Program (PACP) qualifications in order to upload data to the City's geographic information system (GIS).

The CCTV camera must have zoom capability and a swivel head lens capable of turning and rotating 180 degrees to provide inspection of lateral connections.
Each individual storm main inspection, from catch basin to catch basin, must be recorded on one digital file. The City will accept multiple digital files for a single pipe only when the pipe reach cannot be recorded to one digital file due to extreme pipe length or obstructions in the pipe. The City will not accept multiple storm main inspections recorded on a single digital file.

The City will not accept dirty, blurry, foggy, submerged, or otherwise non-viewable inspections.

Prior to final inspection to accept the work, the Contractor must have completed the maintenance hole channeling, catch basin grouting, trench backfill, compaction, and final restoration of the street or easement. The City must have accepted the invert elevations and record drawings. All storm mains and laterals must be cleaned. All lines not clean must be re-flushed, cleaned, and re-inspected.

At least two days prior to the inspection, the Contractor must contact the City to inform the Inspector when and which lines will be inspected.

Immediately preceding the CCTV inspection, water must be poured into the system and must be visible on the DVD recording.

The information listed below must be electronically generated and displayed on the CCTV footage at the beginning of each storm main inspection. This data must be continuously updated, and displayed on the CCTV footage, during the inspection.

1. Date of inspection
2. Contractor company name
3. Operator name
4. Upstream catch basin number to downstream catch basin number
5. Direction of inspection (upstream or downstream)
6. Pipe material and size

A 1-inch ball must be placed immediately in front of the camera, mounted such that the ball is visible and contacts the pipe bottom at all times. CCTV inspection cannot be paused once it begins. Only continuous inspections are acceptable. Pipe joints, catch basins, and lateral connections into catch basins must be thoroughly inspected by panning the entire connection, including maintenance hole risers. Zooming inspection of all lateral connections is required.

The Contractor must bear all costs incurred in correcting any deficiencies found during the CCTV inspection, including the cost of any additional CCTV inspections that may be required by the City to verify that deficiencies have been corrected.

4.5.3 Final Approval

The following steps must be completed before the City will approve the improvements and release the performance bond:

1. All easements must be reviewed, approved, and recorded with the Snohomish County Auditor.
2. The entire drainage system must have been inspected and approved by the City Construction Inspector.
3. Before the City will issue final acceptance of the project, the interior of storm drainage pipes 12” and larger in diameter must be inspected by Closed Circuit Television (CCTV), in electrical format that is acceptable to the City. Camera footage provided to the City in DVD format.
4. Copies of all geotechnical site observations and compaction testing for storm drainage must be submitted to the City for record.
5. The City must receive a satisfactory maintenance bond per Section 1.9.4.
6. Record drawings (also known as as-builts) must be provided, reviewed, corrected, submitted and approved as final in accordance with Section 1.9.5. Record drawing submittals for review may be in paper form, or electronic PDF form at the discretion of the project inspector. A final record drawing will include a complete plan set in electronic format as acceptable to the City, , and one complete paper plan copy sized 24X36.
7. Private operation and maintenance covenants and restrictions must be provided for individual lot BMP’s, reduced Impervious Credit Restrictions, or other stormwater restrictions.
8. The Developer shall provide the City with a Bill of Sale for all portions of the system that will become the property of the City.

4.6 STANDARD STORM DRAWINGS

Drawing #	Description
401	Precast Inlet
402	Type I Catch Basin
403	Type 1L Catch Basin
404	Type II Catch Basin
405	Frame
406A	Grate for Catch Basin or Inlet
406B	Grate for Catch Basin or Inlet
406C	Solid Cover for CB or Inlet
406D	Solid Cover and Frame for CB
407	Frame and Grate Installation
408	Inlet Through Curb
409	Inlet Through Curb Frame
410	Floatable Material Separator
411	Typical Restrictor Installation
412	Restrictor and Lift Gate Assembly
413	Lift Gate Assembly and Secondary Orifice
414	Closed Underground Detention System
415	Soil Amendment and Depth

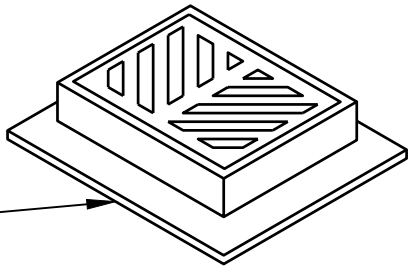

FRAME PER STANDARD 405
VANED GRATE PER STANDARD 406A/406B
SOLID LID PER STANDARD 406C
SECURE FRAME TO BASIN WITH CONCRETE
IN UNPAVED AREAS

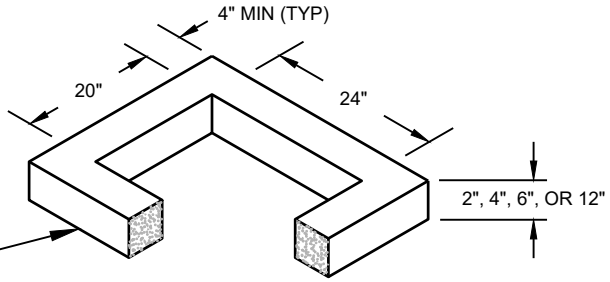

2", 4", 6", OR 12" CONCRETE
RISER SECTION
CLASS 4000 CONCRETE

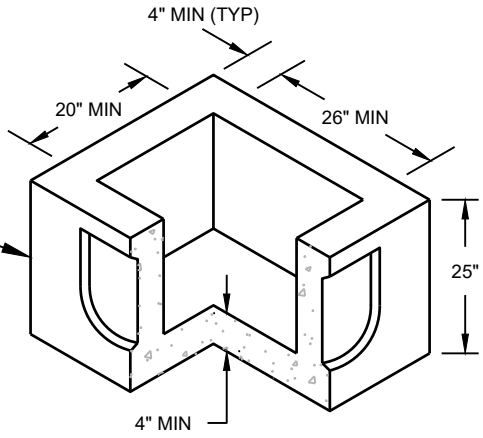

PRECAST CONCRETE BASE SECTION
MAXIMUM 15" DIAMETER PIPE INLET
OR OUTLET
CLASS 4000 CONCRETE

NOTES:

1. CATCH BASIN TO CONFORM TO WSDOT STANDARD PLANS.
2. DEPTH FROM RIM ELEVATION TO INVERT ELEVATION SHALL NOT EXCEED 5'.
3. SAND COLLARS SHALL BE USED ON SMOOTH BORE EXTERNAL PIPES.
4. RISER STACK SHALL NOT DEFLECT MORE THAN 6" HORIZONTALLY OVER TOTAL RISER STACK HEIGHT.
5. ALL SEAMS SHALL BE GROUTED INSIDE AND OUT WITH A TYPE 3 NON-SHRINK GROUT OR EQUIVALENT.
6. ALL UNDER CASTINGS TO BE GROUTED TO THE RISER SECTION AND ALSO EXTERNALLY TO HOLD CASTING SECURELY IN PLACE.
7. PIPES BETWEEN STRUCTURES SHALL NOT EXCEED $\frac{1}{2}$" SAG.
8. ALL UNDER CASTING TO BE GROUTED TO THE RISER SECTION AND ALSO EXTERNALLY TO HOLD CASTING SECURELY IN PLACE.

MONROE WASHINGTON

DESCRIPTION
PRECAST CONCRETE INLET

DESIGNATION
401

SCALE
NOT TO SCALE

REVISED
FEB 1,2024

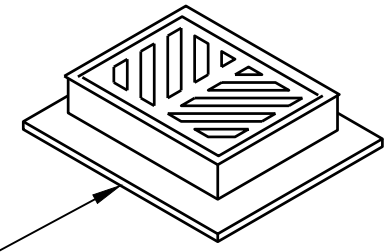

FRAME PER STANDARD 405
VANED GRATE PER STANDARD 406A/406B
SOLID LID PER STANDARD 406C
SECURE FRAME TO BASIN WITH CONCRETE
IN UNPAVED AREAS

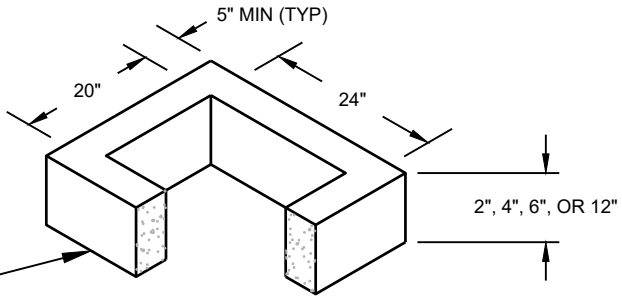

2", 4", 6", OR 12" CONCRETE
RISER SECTION
CLASS 4000 CONCRETE

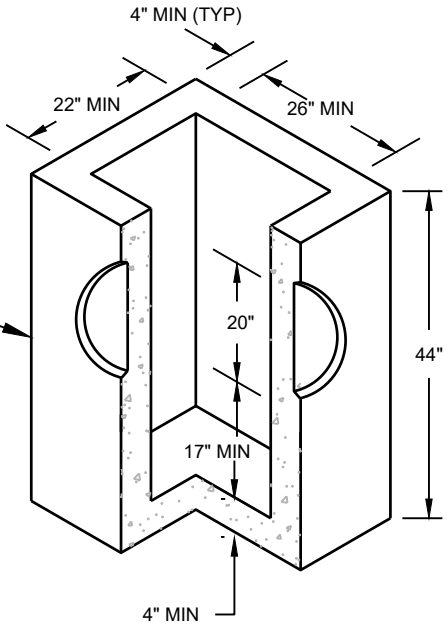

PRECAST CONCRETE BASE SECTION
MAXIMUM 15" DIAMETER PIPE INLET
OR OUTLET
CLASS 4000 CONCRETE

NOTES:

1. CATCH BASIN TO CONFORM TO WSDOT STANDARD PLANS.
2. MAXIMUM DEPTH FROM FINISH GRADE TO PIPE INVERT SHALL BE LESS THAN 5 FEET. TYPE II CATCH BASIN SHALL BE REQUIRED WHERE INVERT DEPTHS ARE 5 FEET OR GREATER.
3. SAND COLLARS SHALL BE USED ON SMOOTH BORE EXTERNAL PIPES.
4. RISER STACK SHALL NOT DEFLECT MORE THAN 6" HORIZONTALLY OVER TOTAL RISER STACK HEIGHT.
5. ALL SEAMS SHALL BE GROUTED INSIDE AND OUT WITH A TYPE 3 NON-SHRINK GROUT OR EQUIVALENT.
6. ALL UNDER CASTINGS TO BE GROUTED TO THE RISER SECTION AND ALSO EXTERNALLY TO HOLD CASTING SECURELY IN PLACE.
7. PIPES BETWEEN STRUCTURES SHALL NOT EXCEED $\frac{1}{2}$" SAG.
8. ALL UNDER CASTING TO BE GROUTED TO THE RISER SECTION AND ALSO EXTERNALLY TO HOLD CASTING SECURELY IN PLACE.

MONROE WASHINGTON

DESCRIPTION
TYPE 1 CATCH BASIN

DESIGNATION
402

SCALE
NOT TO SCALE

REVISED
FEB 1,2024

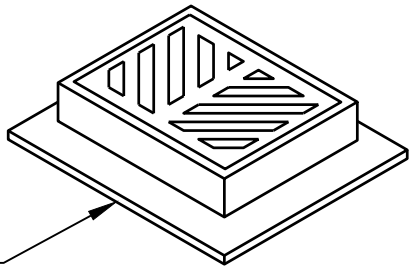

FRAME PER STANDARD 405
VANED GRATE PER STANDARD 406A/406B
SOLID LID PER STANDARD 406C
SECURE FRAME TO BASIN WITH CONCRETE
IN UNPAVED AREAS

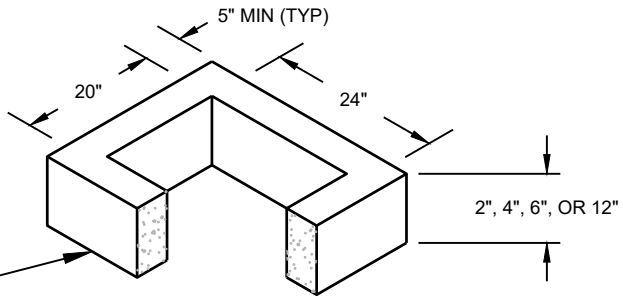

2", 4", 6", OR 12" CONCRETE
RISER SECTION
CLASS 4000 CONCRETE

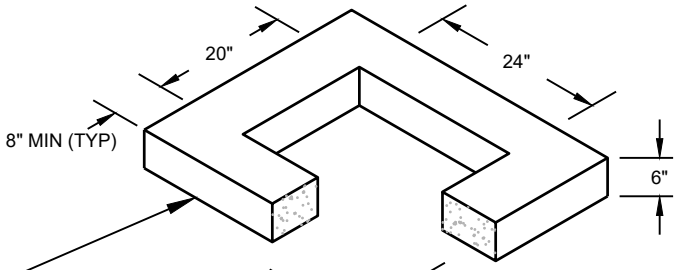

6" CONCRETE REDUCING
TOP SLAB
CLASS 4000 CONCRETE

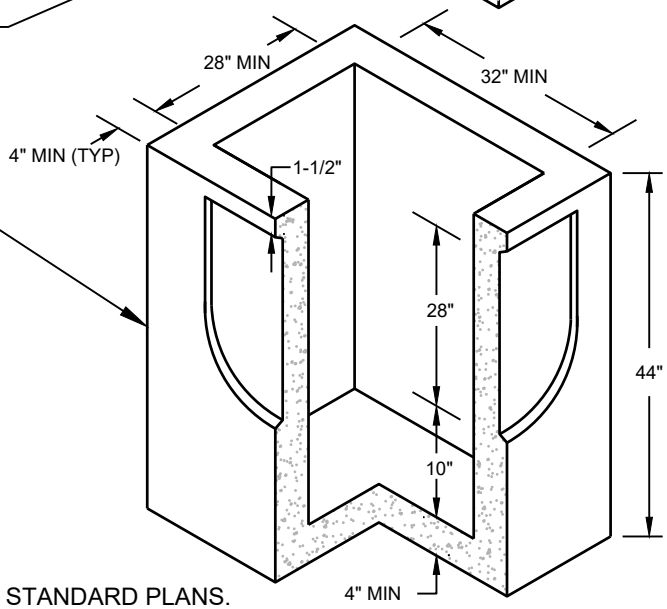

PRECAST CONCRETE BASE SECTION
MAXIMUM ONE 28" DIAMETER
KNOCKOUT PER SIDE
ENTRANCE ANGLE TO BE LIMITED BY
KNOCKOUTS
CLASS 4000 CONCRETE
PIPE OUTER DIAMETER PLUS CATCH
BASIN SHALL NOT EXCEED 28"

NOTES:

1. CATCH BASIN TO CONFORM TO WSDOT STANDARD PLANS.
2. SAND COLLARS SHALL BE USED ON SMOOTH BORE EXTERNAL PIPES.
3. RISER STACK SHALL NOT DEFLECT MORE THAN 6" HORIZONTALLY OVER TOTAL RISER STACK HEIGHT.
4. ALL SEAMS SHALL BE GROUTED INSIDE AND OUT WITH A TYPE 3 NON-SHRINK GROUT OR EQUIVALENT.
5. ALL UNDER CASTINGS TO BE GROUTED TO THE RISER SECTION AND ALSO EXTERNALLY TO HOLD CASTING SECURELY IN PLACE.
6. PIPES BETWEEN STRUCTURES SHALL NOT EXCEED $\frac{1}{2}$" SAG.
7. ALL UNDER CASTING TO BE GROUTED TO THE RISER SECTION AND ALSO EXTERNALLY TO HOLD CASTING SECURELY IN PLACE.

MONROE WASHINGTON

DESCRIPTION

TYPE 1L CATCH BASIN

DESIGNATION

403

SCALE
NOT TO SCALE

REVISED
FEB 1,2024

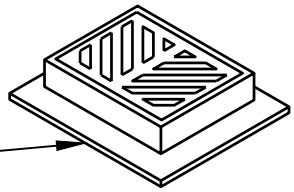

FRAME PER STANDARD 405
VANED GRATE PER STANDARD 406A/406B
SOLID LID PER STANDARD 406C
SECURE FRAME TO BASIN WITH CONCRETE
IN UNPAVED AREAS

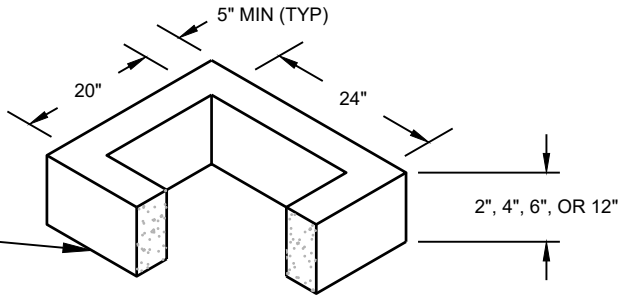

2", 4", 6", OR 12" CONCRETE
RISER SECTION
CLASS 4000 CONCRETE

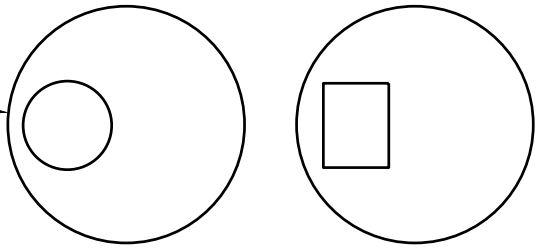

TOP SLAB WITH 24" ROUND
ACCESS OR 20" X 24"
RECTANGULAR ACCESS

NOTES:

1. CATCH BASIN TO CONFORM TO WSDOT STANDARD PLANS.
2. ALL TYPE 2 CATCH BASINS EQUIPPED WITH OPEN GRATES SHALL BE LOCKING TYPE GRATES.
3. ALL TYPE 2 CATCH BASINS NOT IN PAVED AREAS SHALL BE EQUIPPED WITH LOCKING LIDS.
4. CATCH BASINS SHALL BE SET SO THAT STEPS ARE DIRECTLY UNDER THE OPENING.
5. ALL TYPE 2 CATCH BASINS SHALL BE EQUIPPED WITH STEPS AND LADDER PER STANDARD 606.
6. CONCRETE SHALL BE CLASS 4000.
7. MINIMUM DISTANCE FROM INVERT TO CATCH BASIN SUMP SHALL BE 2'.
8. CATCH BASIN SECTIONS AND LID WILL BE HS20 TRAFFIC LOAD CERTIFIED BY MANUFACTURER.
9. HOLE SIZE = PIPE OUTER DIAMETER + 5" MAX
   MAX HOLE SIZE = 36" (48" DIAMETER CATCH BASIN)
   MAX HOLE SIZE = 42" (54" DIAMETER CATCH BASIN)
10. SAND COLLARS SHALL BE USED ON SMOOTH BORE EXTERNAL PIPES.
11. RISER STACK SHALL NOT DEFLECT MORE THAN 6" HORIZONTALLY OVER TOTAL RISER STACK HEIGHT.
12. ALL SEAMS SHALL BE GROUTED INSIDE AND OUT WITH A TYPE 3 NON-SHRINK GROUT OR EQUIVALENT.
13. ALL UNDER CASTING TO BE GROUTED TO THE RISER SECTION AND ALSO EXTERNALLY TO HOLD CASTING SECURELY IN PLACE.
14. PIPES BETWEEN STRUCTURES SHALL NOT EXCEED $\frac{1}{2}$" SAG.

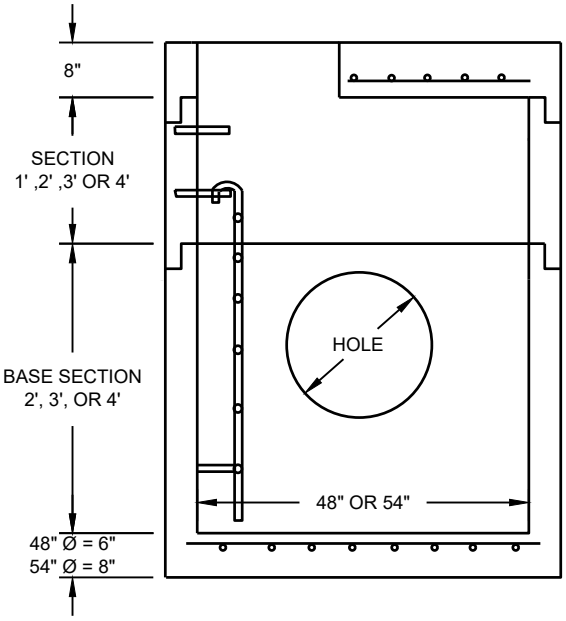

MONROE WASHINGTON

DESCRIPTION

TYPE II CATCH BASIN 48" OR 54"

DESIGNATION

404

SCALE
NOT TO SCALE

REVISED
FEB 1,2024

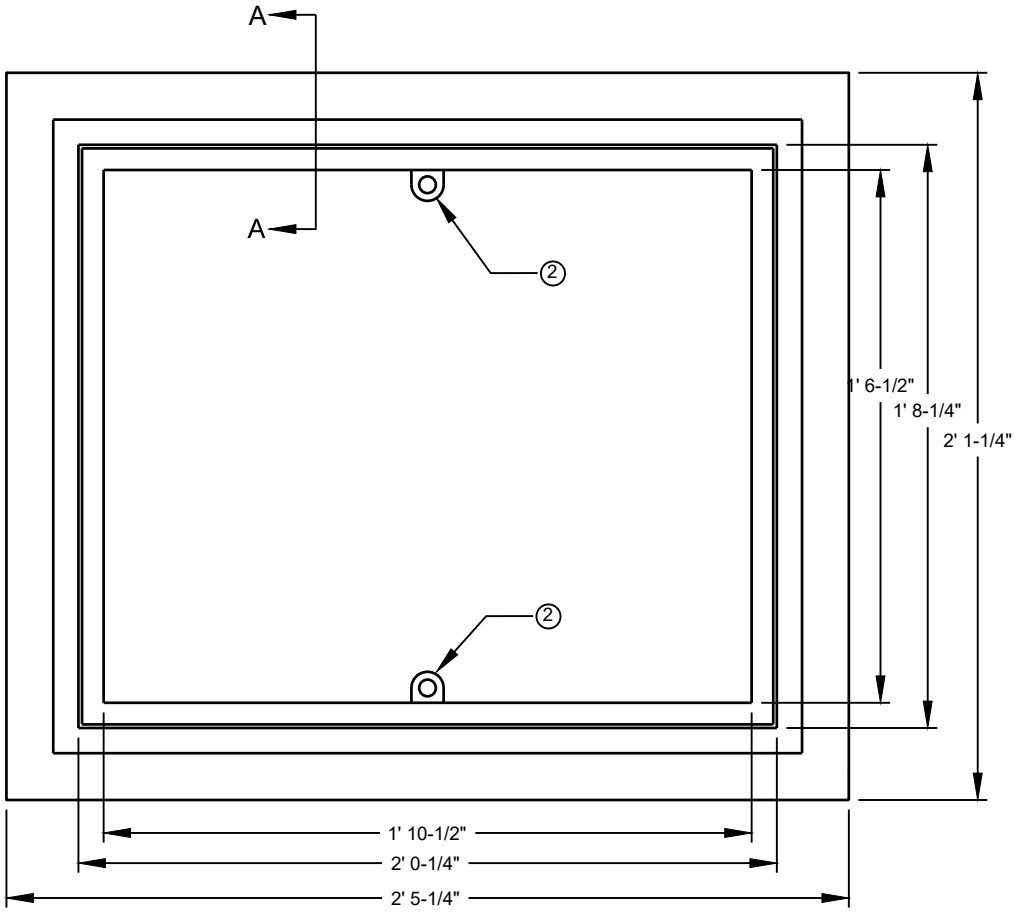

TOP VIEW

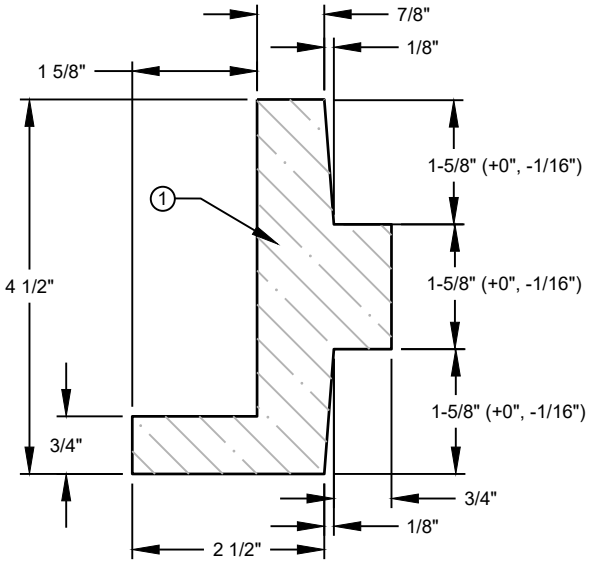

SECTION A-A

NOTES:

1. MATERIAL USED SHALL BE CAST IRON PER ASTM-A48, CLASS 30.
2. WHEN A LOCKING GRATE OR COVER IS REQUIRED THE FRAME SHALL BE FABRICATED SO AS TO ACCEPT TWO (2) $\frac{5}{8}$" STAINLESS STEEL SOCKET HEAD CAP SCREWS OF GRATE OR COVER.
3. FOR APPROVED GRATES AND SOLID COVER SEE STANDARD DRAWINGS 406A, 406B, AND 406C.

MONROE WASHINGTON

DESCRIPTION
FRAME

DESIGNATION
405

SCALE
NOT TO SCALE

REVISED
FEB 1,2024

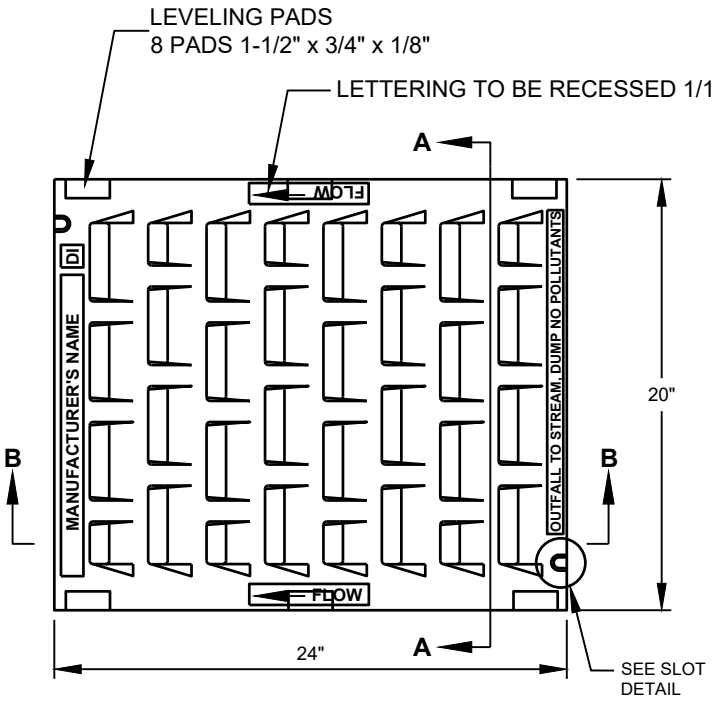

TOP VIEW

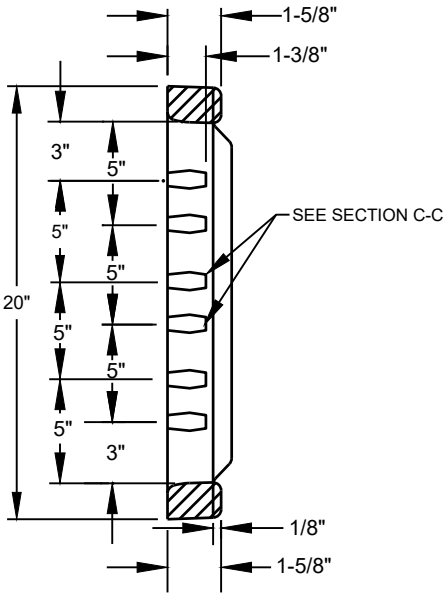

SECTION A-A

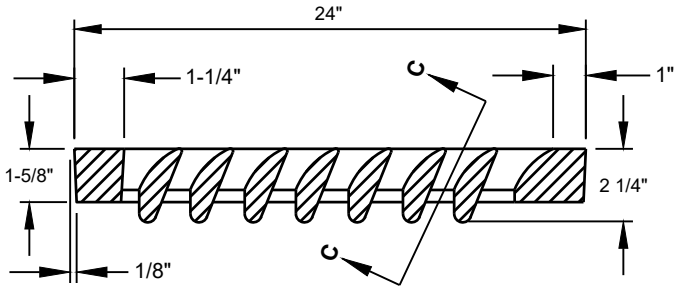

SECTION B-B

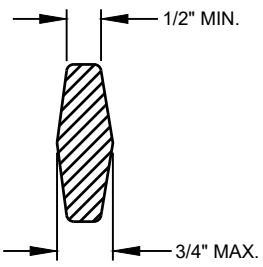

SECTION C-C

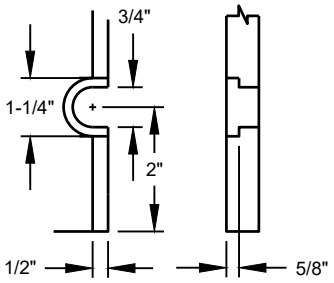

SLOT DETAIL
LOCKING LID

NOTES:

1. WELDING IS NOT PERMITTED.
2. DIMENSIONS SHALL HAVE A +/-1/16" TOLERANCE.
3. DIMENSIONS SHALL HAVE 1/8" RADIUS AND 1/8" CHAMFER OR COMPLETE DEBURRING.
4. THE NAME OF THE MANUFACTURER AND DIRECTION OF FLOW SHALL BE EMBOSSED ON THE TOP SURFACE OF EACH GRATE. LETTERING TO BE RECESSED1/16".
5. EMBOSS GRATE WITH MATERIAL TYPE, DI (FOR DUCTILE IRON) OR CS (FOR CAST STEEL) NEAR THE NAME OF THE MANUFACTURER.
6. PLACE CATCH BASIN MARKING, "OUTFALL TO STREAM, DUMP NO POLLUTANTS", ON THE SURFACE OF EACH GRATE, PREFERABLY LOCATED IN THE BORDER AREA.
7. LIDS SHALL BE LOCKING.
8. WHERE THE ROADWAY GRADE IS 4% OR GREATER A DUCTILE IRON VANED GRATE SHALL BE INSTALLED.

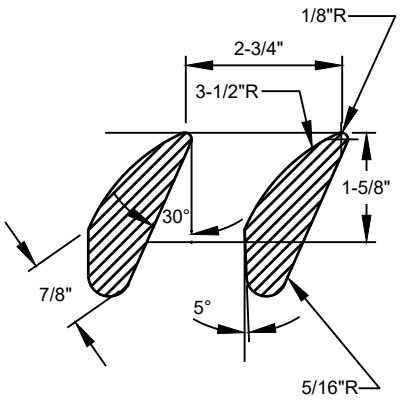

VANE DETAIL

MONROE WASHINGTON

DESCRIPTION

GRATE FOR CATCH BASIN OR INLET

DESIGNATION

406A

SCALE

NOT TO SCALE

REVISED

FEB 1,2024

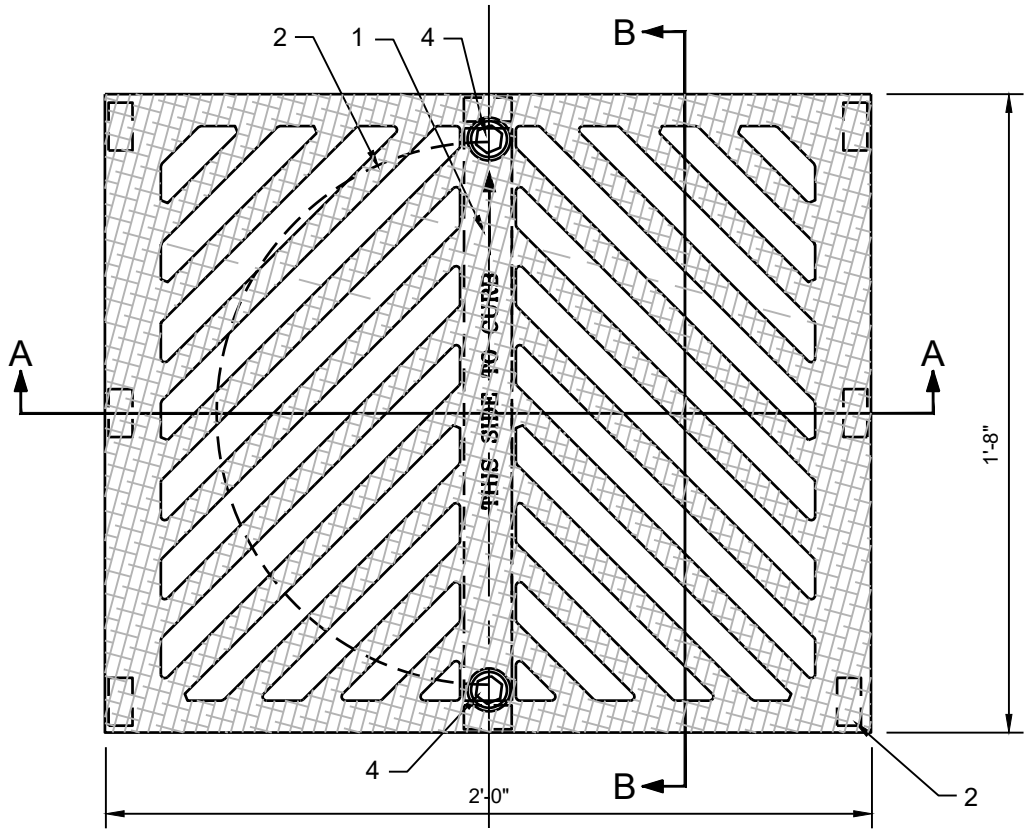

PLAN

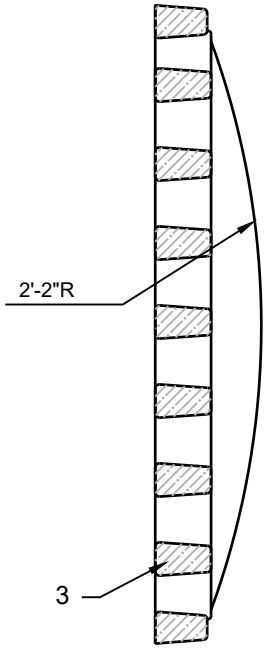

SECTION B-B

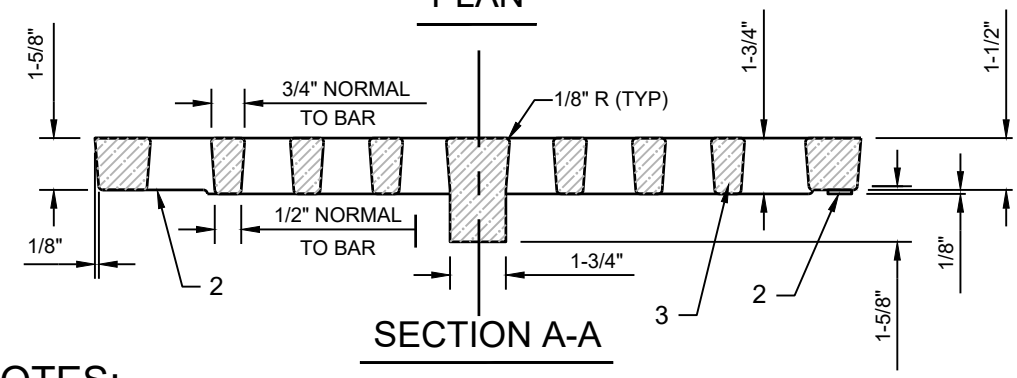

SECTION A-A

NOTES:

1. FOUNDRY NAME, THIS SIDE TO CURB WITH ARROW AND (DI) FOR DUCTILE IRON SHALL BE EMBOSSED ON TOP OF GRATE WITH $\frac{1}{16}$" RECESSED LETTERS.

2. SEATING OF GRATE SHALL BE ACCOMPLISHED BY ONE OF THE FOLLOWING:
   - 2.1. 8 INTEGRALLY CAST PADS (1-1/2" X $\frac{3}{4}$" X $\frac{1}{8}$")
   - 2.2. MACHINE BOTTOM SURFACE OUTSIDE A 17" DIAMETER

3. MATERIAL USED SHALL BE DUCTILE IRON PER ASTM-A536 GRADE 80-55-06.

4. WHEN LOCKING GRATE REQUIRED HOLES WILL BE PROVIDED IN CASTING TO ALLOW FOR TWO $\frac{5}{8}$" Ø STAINLESS STEEL SOCKET HEAD CAP SCREWS SO THAT NO PART OF HEAD PROTRUDES ABOVE TOP OF CASTING.

5. GRATE TO BE USED WITH FRAME SHOWN IN STANDARD 405.

MONROE WASHINGTON

DESCRIPTION

GRATE FOR CATCH BASIN OR INLET

SCALE: NOT TO SCALE

REVISED: FEB 1,2024

DESIGNATION

406B

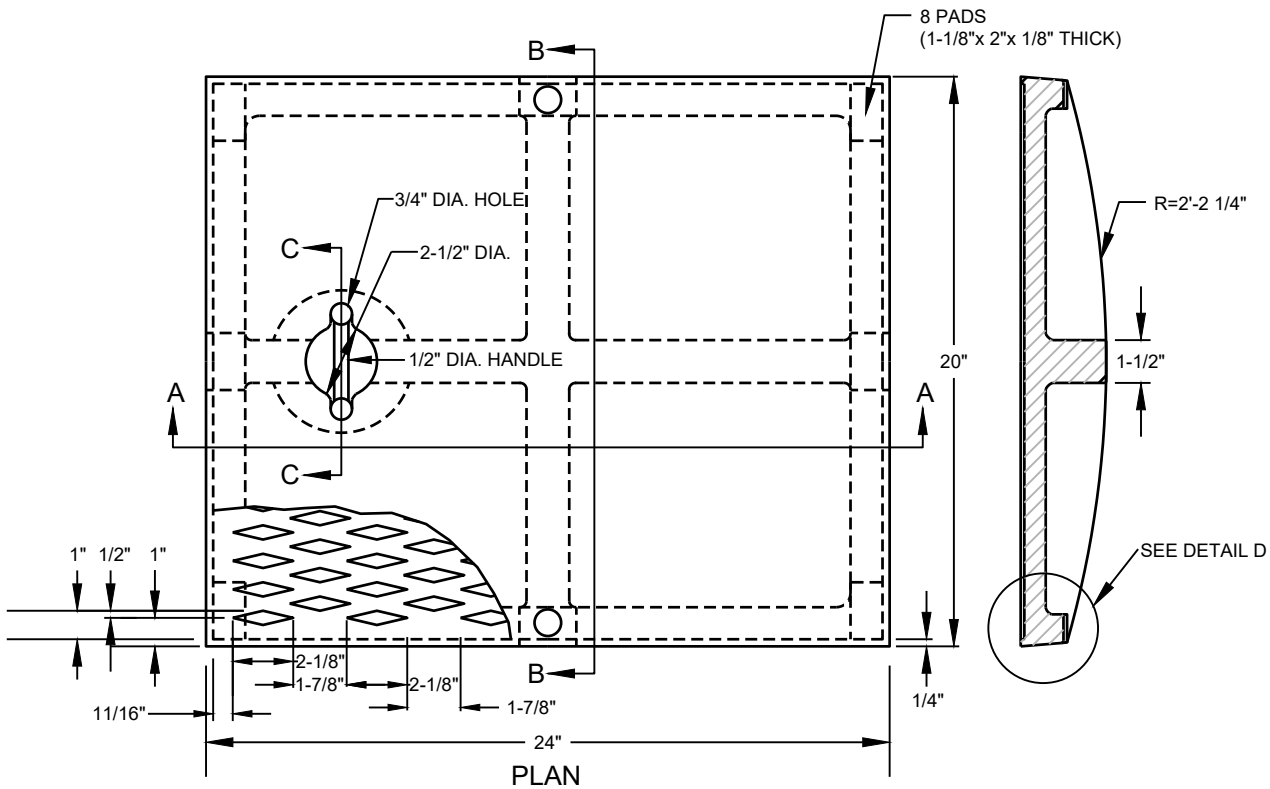

PLAN

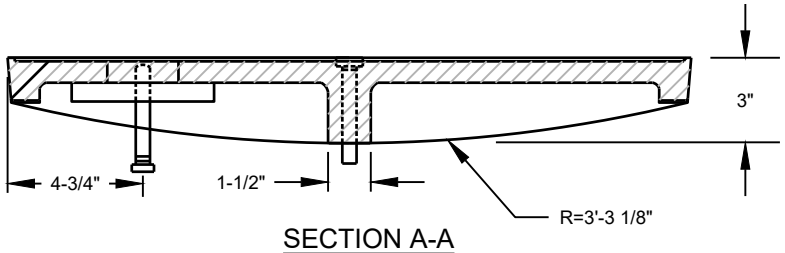

SECTION A-A

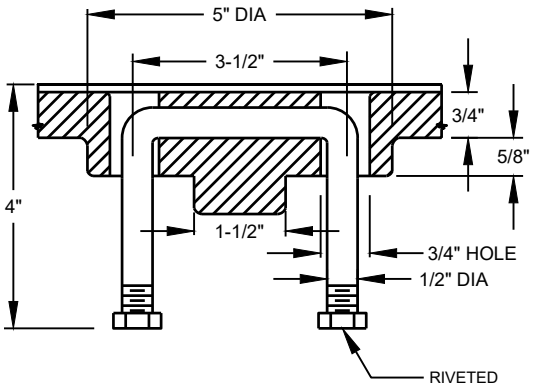

DETAIL OF HANDLE SECTION C-C

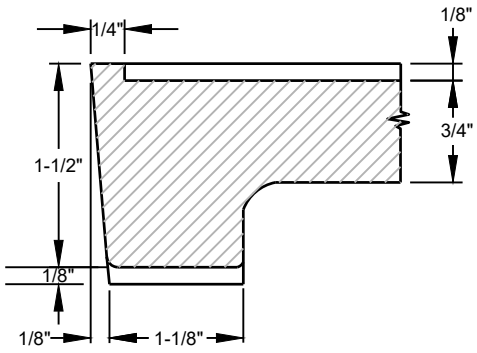

DETAIL D

MONROE WASHINGTON	DESCRIPTION: SOLID COVER FOR CB OR INLET	DESIGNATION: 406C
	SCALE: NOT TO SCALE	REVISED: FEB 1,2024

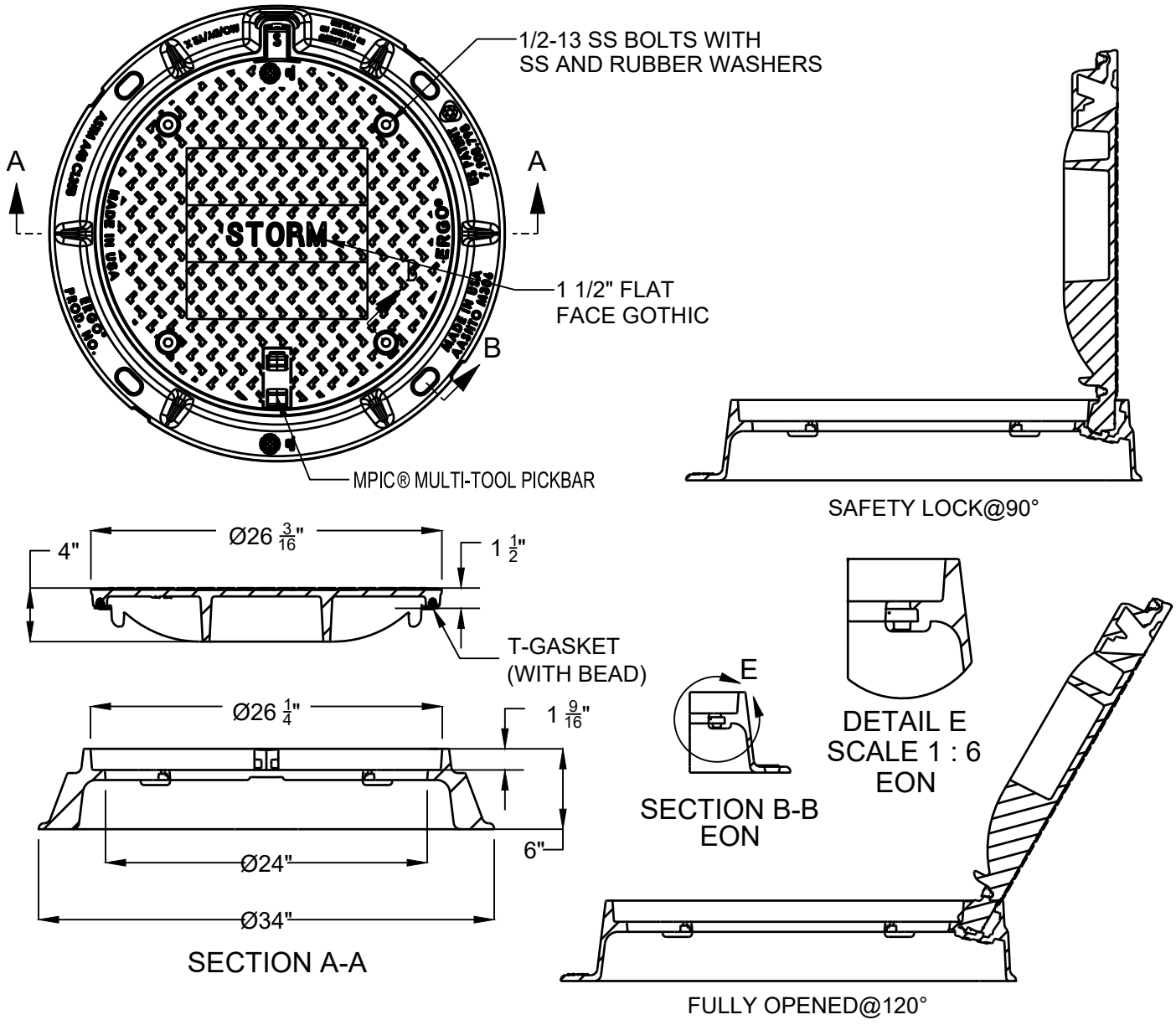

NOTES

1. MANHOLE RINGS SHALL BE GRAY IRON CONFORMING TO THE REQUIREMENTS OF AASHTO M 105, CL35B.
2. MANHOLE COVER TO BE DUCTILE IRON CONFORMING TO ASTM A536, GR 80-55-06.
3. LOCKING COVER TO BE USED AT ALL LOCATIONS. THE LID SHALL BE LOCKED DOWN WITH 4 1/2-13 STAINLESS STEEL BOLTS.
4. ALL UNDER CASTINGS TO BE GROUTED TO THE RISER SECTION AND ALSO EXTERNALLY TO HOLD CASTINGS SECURELY IN PLACE.
5. MANHOLE RING AND COVER SHALL BE EAST JORDAN PART NUMBER 001040062L03.

MONROE WASHINGTON

DESCRIPTION

SOLID COVER AND FRAME FOR CB

DESIGNATION

406D

SCALE

NOT TO SCALE

REVISED

FEB 1,2024

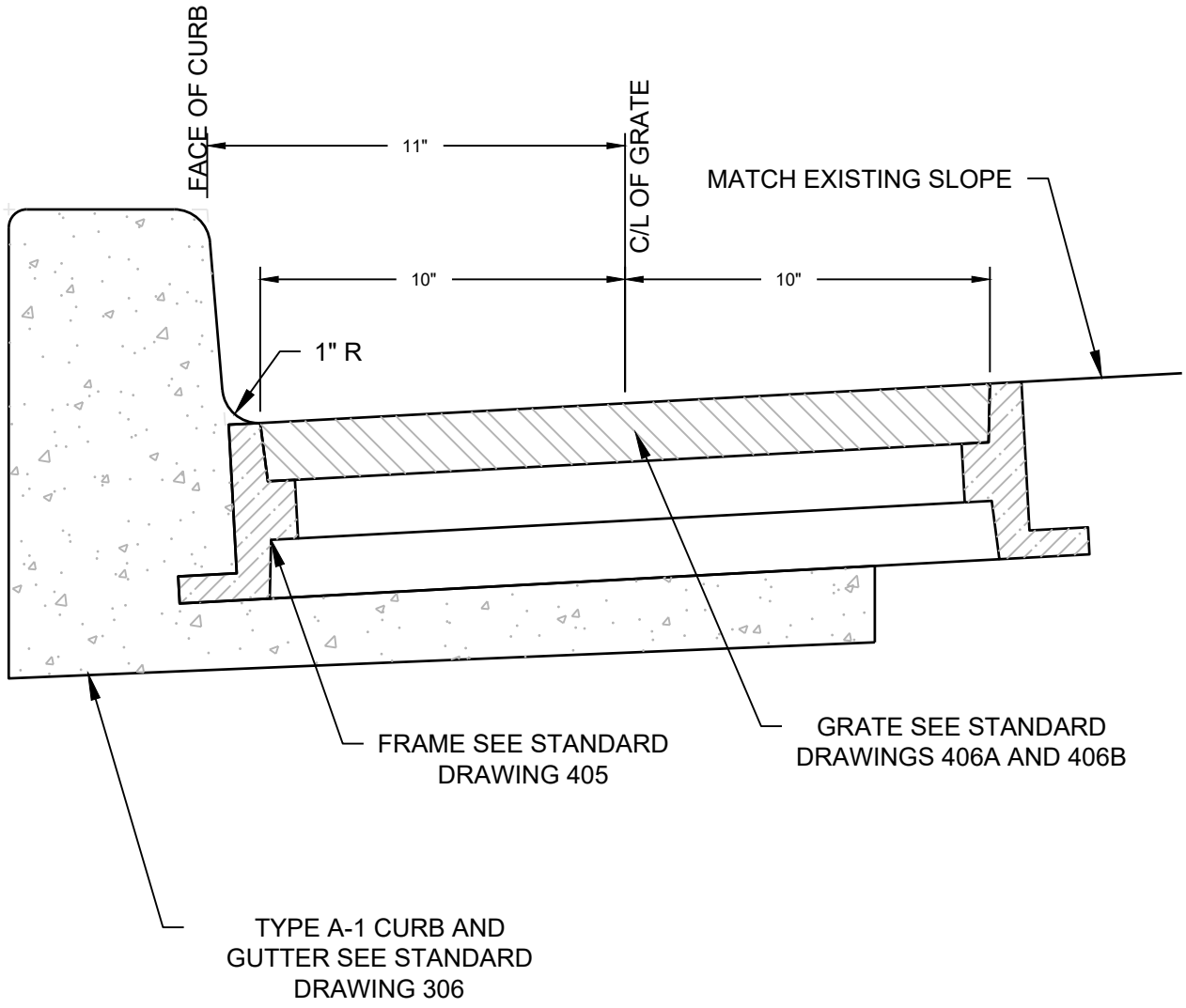

MONROE WASHINGTON

DESCRIPTION

FRAME AND GRATE INSTALLATION

DESIGNATION

407

SCALE

NOT TO SCALE

REVISED

FEB 1,2024

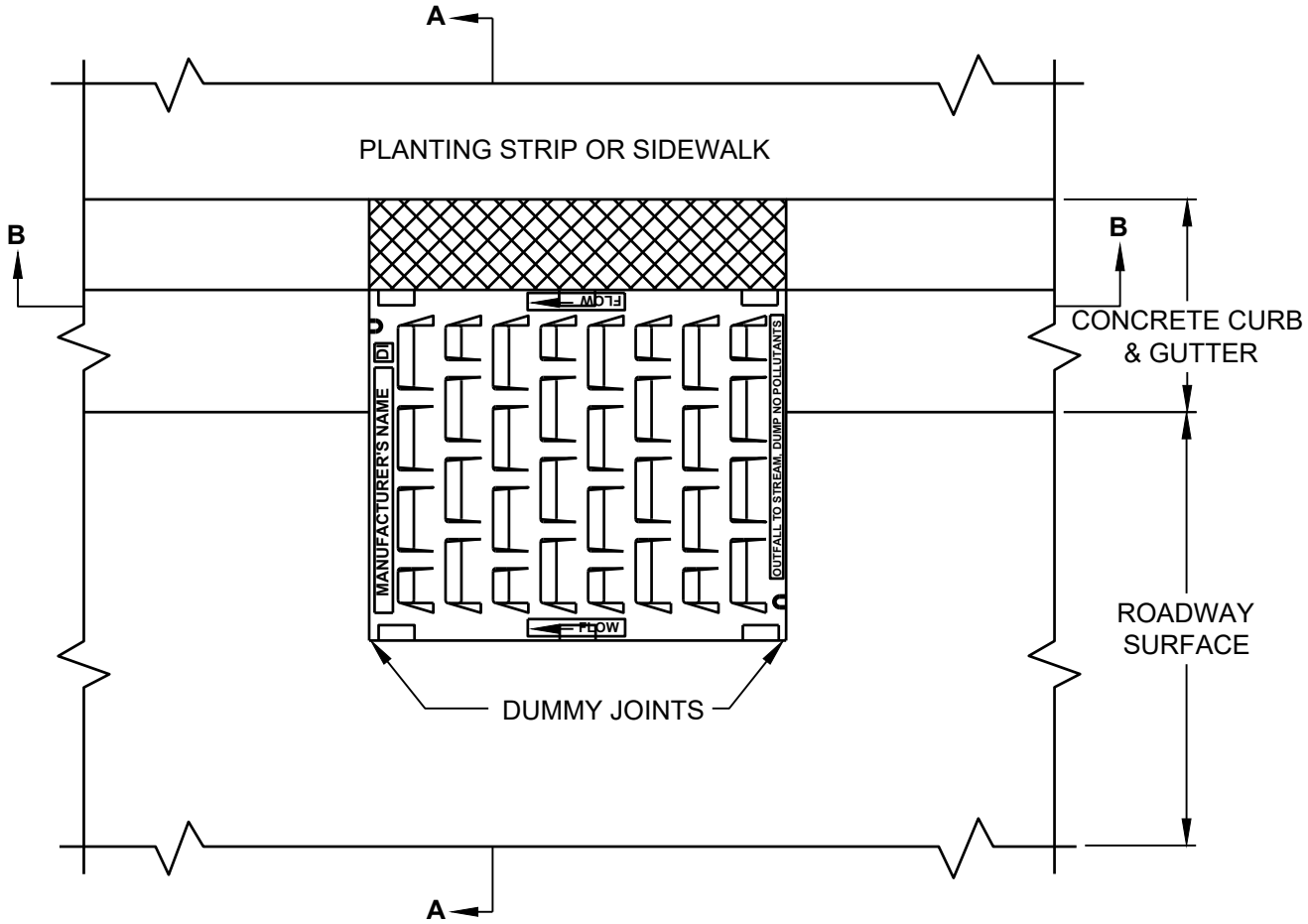

PLAN

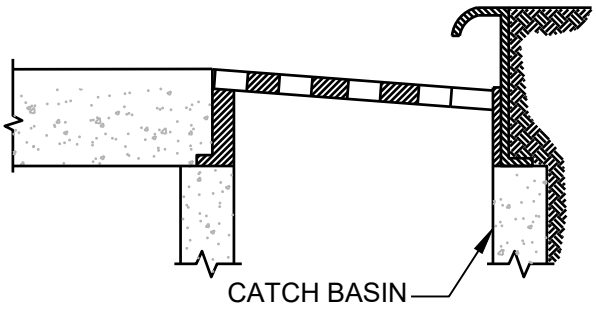

SECTION A-A

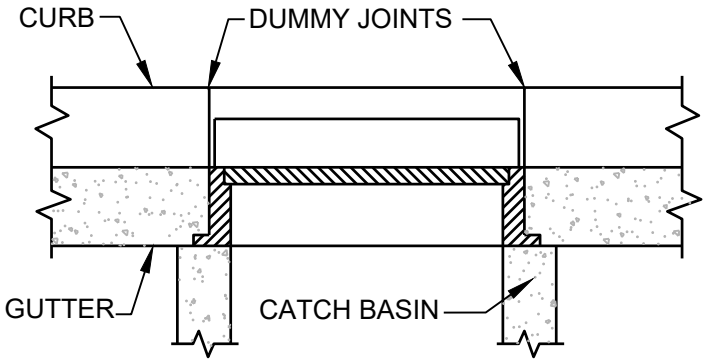

SECTION B-B

NOTES:

1. SET TO GRADE AND CONSTRUCT ROAD AND GUTTER FLUSH WITH FRAME.
2. INSTALL GRATE PER STANDARD DRAWING 406A OR 406B.
3. CONFORM TO WSDOT STANDARD PLANS.

MONROE WASHINGTON

DESCRIPTION

INLET THROUGH CURB

DESIGNATION

408

SCALE

NOT TO SCALE

REVISED

FEB 1,2024

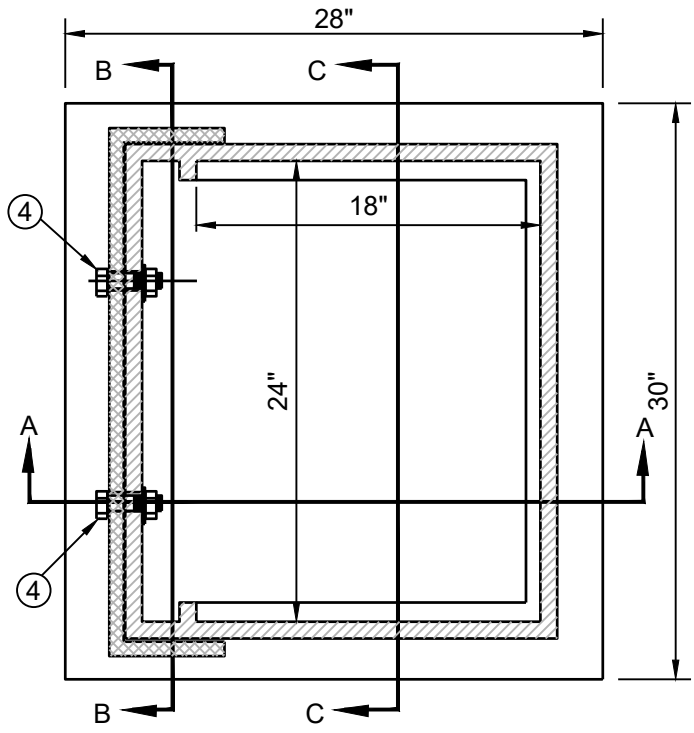

TOP VIEW
GRATE REMOVED

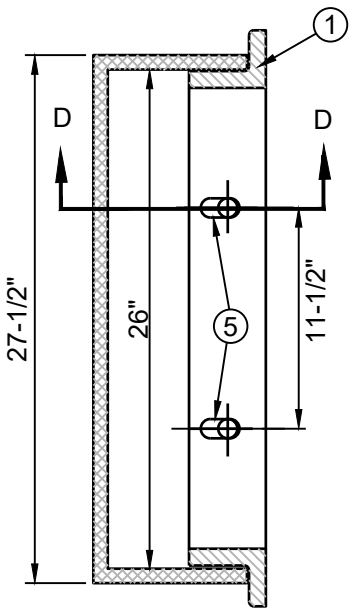

SECTION B-B

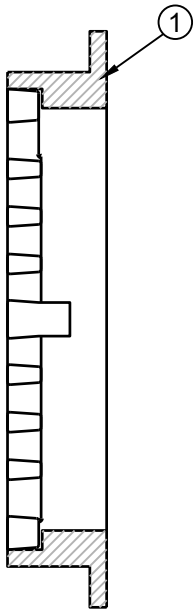

SECTION C-C

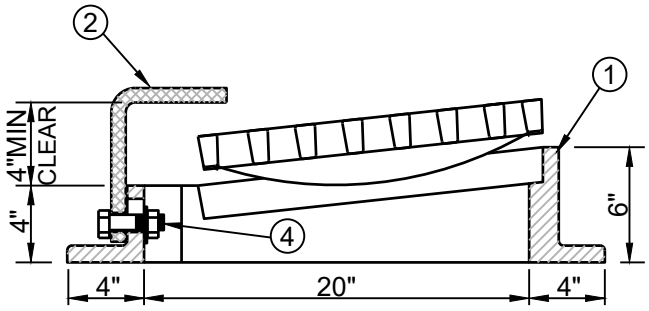

SECTION A-A
GRATE RAISED

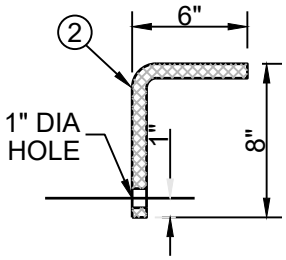

SECTION D-D

NOTES:

1. GRATE TO BE FABRICATED PER STANDARD DRAWING 406A WITH OVER ALL DIMENSION OF 24" X 18".
2. PROVIDE $\frac{3}{4}$" BOLT, NUT, AND WASHERS.
3. ADJUSTMENT SLOT IN FRAME CASTING APPROXIMATELY 1" X 2". VERTICAL PLACEMENT TO PROVIDE MINIMUM CLEARANCE BETWEEN GRATE AND COVER PLATE.
4. SEE STANDARD 408 FOR INSTALLATION DETAILS.

MONROE WASHINGTON

DESCRIPTION
INLET THROUGH CURB FRAME

DESIGNATION
409

SCALE
NOT TO SCALE

REVISED
FEB 1,2024

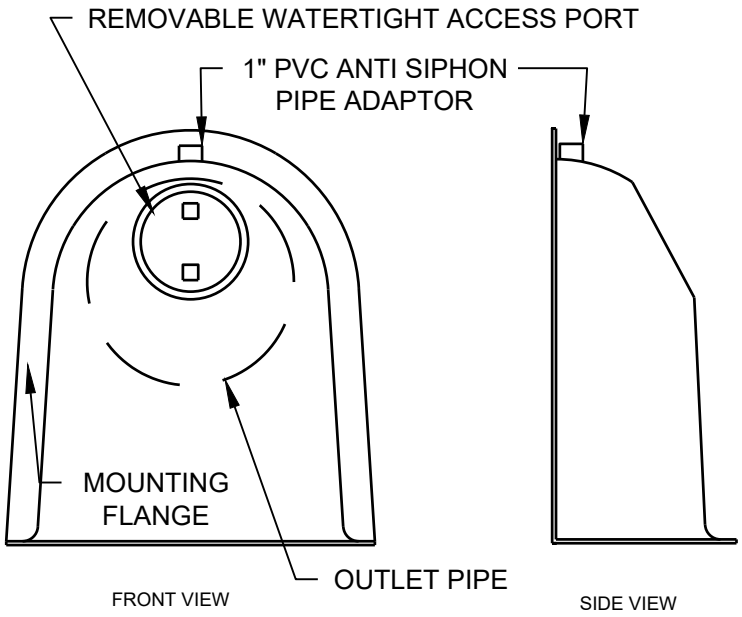

OIL WATER HOOD

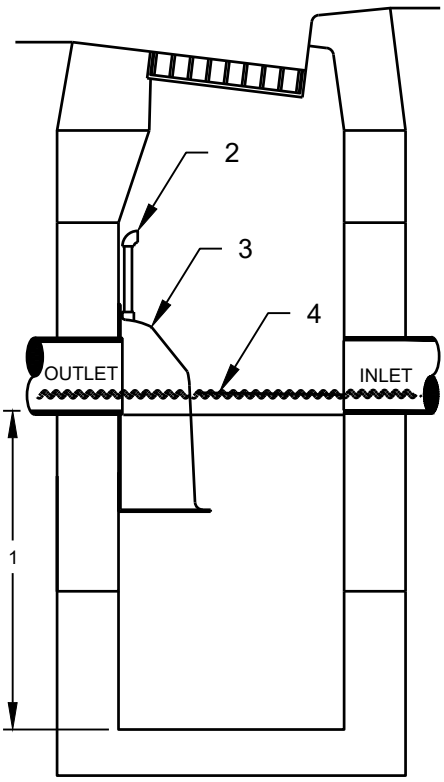

TYPICAL INSTALLATION

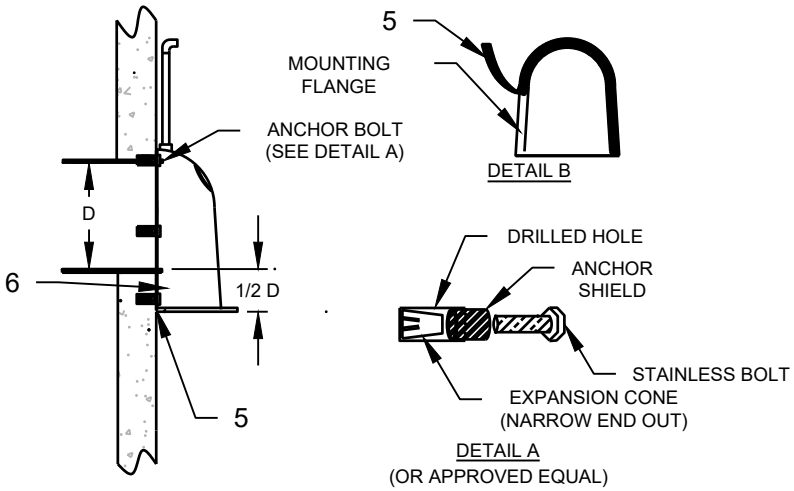

INSTALLATION DETAIL

NOTES:

1. SUMP DEPTH OF 36" MINIMUM FOR UP TO 12" PIPE OUTLET. FOR PIPES 15" AND ABOVE SUMP DEPTH OF 2.5 TO 3.0 TIMES PIPE ID REQUIRED.
2. ANTI SIPHON
3. OIL / DEBRIS HOOD, SNOUT® PRODUCT OR APPROVED EQUAL. SEE WWW.BMPINC.COM FOR SNOUT BEST MANAGEMENT PRACTICE.
4. WATER LEVEL
5. FOAM GASKET WITH PSA BACKING. SNOUT SHALL BE SEALED TO BASIN WALL.
6. POSITION HOOD SUCH THAT BOTTOM FLANGE IS A DISTANCE OF $\frac{1}{2}$ OUTLET PIPE DIAMETER (MINIMUM) BELOW THE PIPE INVERT. MINIMUM DISTANCE FOR PIPES LESS THAN 12" IS 6"

MONROE WASHINGTON

DESCRIPTION

FLOATABLE MATERIAL SEPARATOR

DESIGNATION

410

SCALE

NOT TO SCALE

REVISED

FEB 1,2024

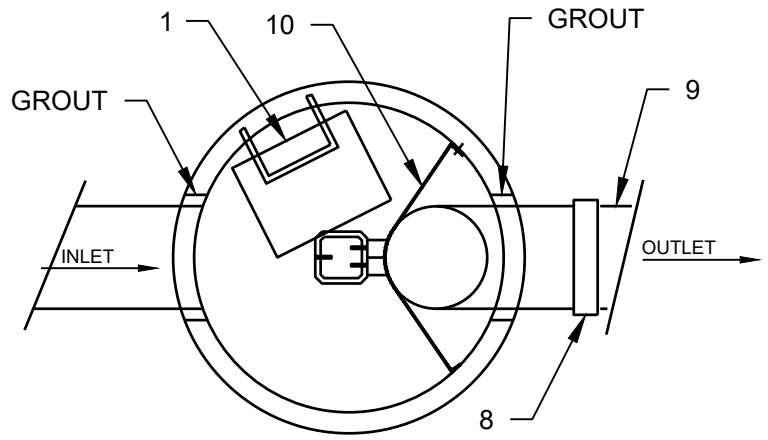

PLAN

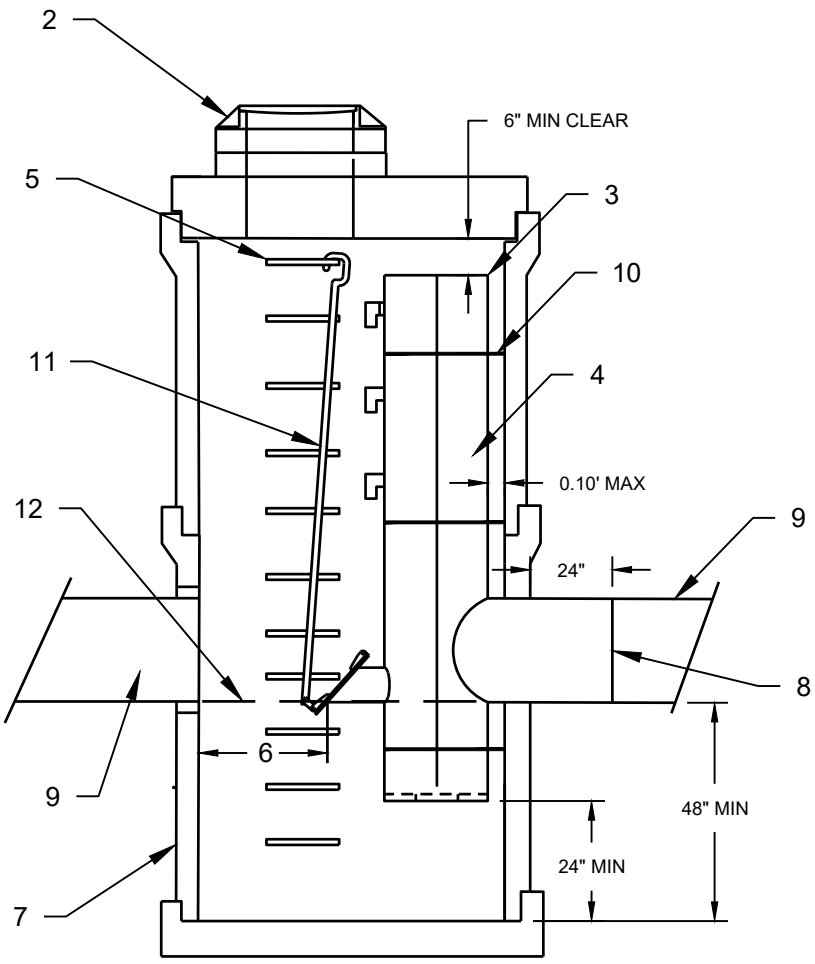

ELEVATION

NOTES:

1. INSTALL CB TOP, FRAME, GRATE, AND SECTIONS SO THAT LIFT GATE IS VISIBLE THROUGH OPENING AND STEPS CLEAR INLET AND RESTRICTOR UNIT.
2. INSTALL LOCKING FRAME AND GRATE OR LID PER STANDARD DRAWING 405. FRAME AND LID PER STANDARD DRAWING 608 IS REQUIRED IF INSTALLATION IS NOT IN A PAVED AREA.
3. OVERFLOW ELEVATION
4. SEPARATOR ASSEMBLY SEE STANDARD DRAWING 412.
5. STEPS PER STANDARD DRAWING 607.
6. MINIMUM CLEARANCE:
   36" FOR OUTLETS OF 24" AND LARGER
   18" FOR OUTLETS OF 18" AND SMALLER
7. 54" TYPE 2 CATCH BASIN OR LARGER.
8. OUTLET SHALL BE CONNECTED TO THE CULVERT WITH A STANDARD COUPLING BAND FOR CORRUGATED METAL OR GROUTED INTO THE BELL OF THE CONCRETE PIPE.
9. SEE PLAN AND SPECIFICATIONS FOR SIZE AND TYPE OF PIPE ENTERING AND EXITING CATCH BASIN.
10. SECURE SEPARATOR TO CB WITH 8 GAUGE ALUMINUM STRAP. BOLT TO CATCH BASIN WALL WITH STAINLESS STEEL ANCHOR BOLTS AND TACK WELD TO SEPARATOR UNIT. ONE STRAP ABOVE AND BELOW OUTLET REQUIRED, INTERMEDIATE STRAPS REQUIRED FOR RESTRICTOR RISERS GREATER THAN 12' ABOVE OUTLET.
11. INSTALL ROD WITH HANDLE FOR LIFT GATE.
12. INVERT ELEVATION: SEE PLANS AND SPECIFICATIONS.

MONROE WASHINGTON

DESCRIPTION

TYPICAL RESTRICTOR INSTALLATION

SCALE: NOT TO SCALE

REVISED: FEB 1,2024

DESIGNATION

411

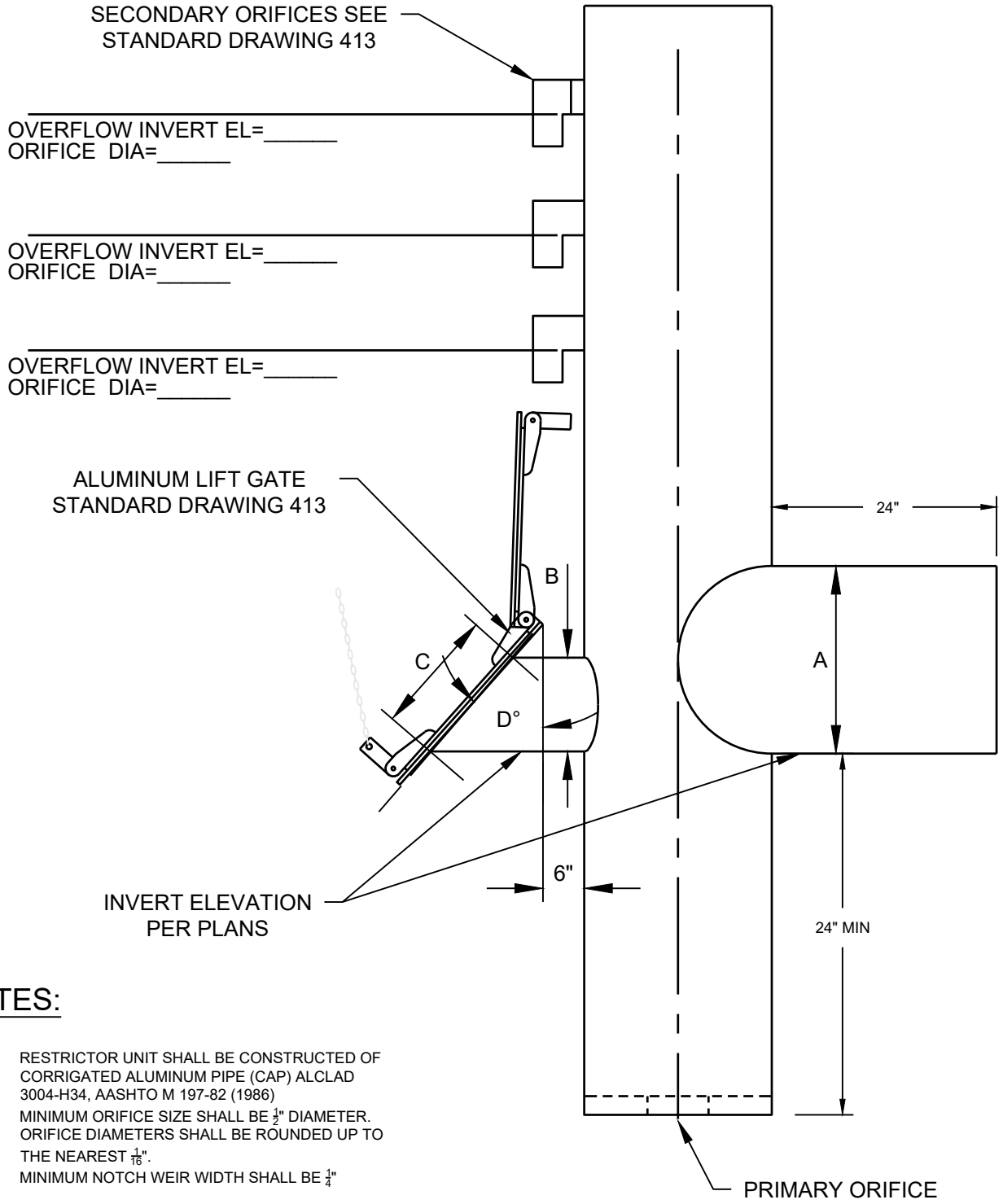

NOTES:

1. RESTRICTOR UNIT SHALL BE CONSTRUCTED OF CORRIGATED ALUMINUM PIPE (CAP) ALCLAD 3004-H34, AASHTO M 197-82 (1986)
2. MINIMUM ORIFICE SIZE SHALL BE $\frac{1}{2}$" DIAMETER.
3. ORIFICE DIAMETERS SHALL BE ROUNDED UP TO THE NEAREST $\frac{1}{16}$".
4. MINIMUM NOTCH WEIR WIDTH SHALL BE $\frac{1}{4}$"

ITEM	DESCRIPTION	SIZE	
A	OUTLET	18" AND SMALLER	24" AND LARGER
B	CLEANING	6" ID	10" ID
C	GATE SIZE	8" OPENING	12" OPENING
D	ANGLE	42°±	34°±

MONROE WASHINGTON

DESCRIPTION

RESTRICTOR AND LIFT GATE ASSEMBLY

DESIGNATION

412

SCALE

NOT TO SCALE

REVISED

FEB 1,2024

NOTES:

1. LIFT GATE SHALL BE CONSTRUCTED OF $\frac{1}{4}$" R-6061-T6 ALUMINUM WITH CLOSED CELL NEOPRENE PER ASTM 1056-67 CHEMICAL RESISTANT (OIL & GREASE), OZONE RESISTANT, 67° TO +250° F SERVICE TEMPERATURE.
2. MINIMUM ORIFICE SIZE SHALL BE $\frac{1}{2}$" DIAMETER.
3. ORIFICE DIAMETERS SHALL BE ROUNDED UP TO THE NEAREST $\frac{1}{16}$".
4. MINIMUM NOTCH WEIR WIDTH SHALL BE $\frac{1}{4}$"

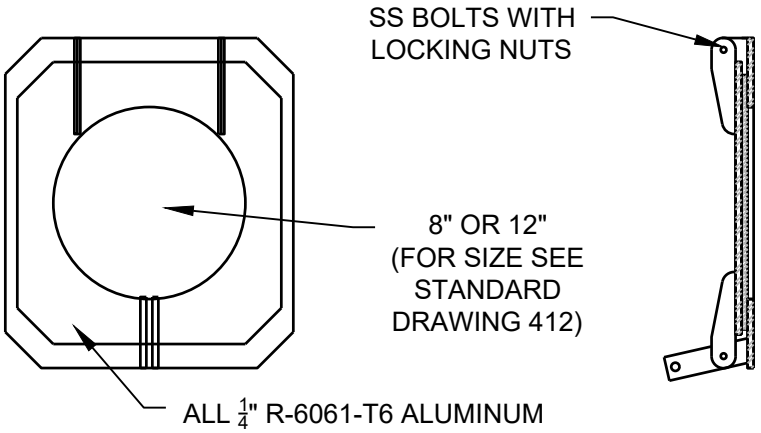

LIFT GATE DETAIL

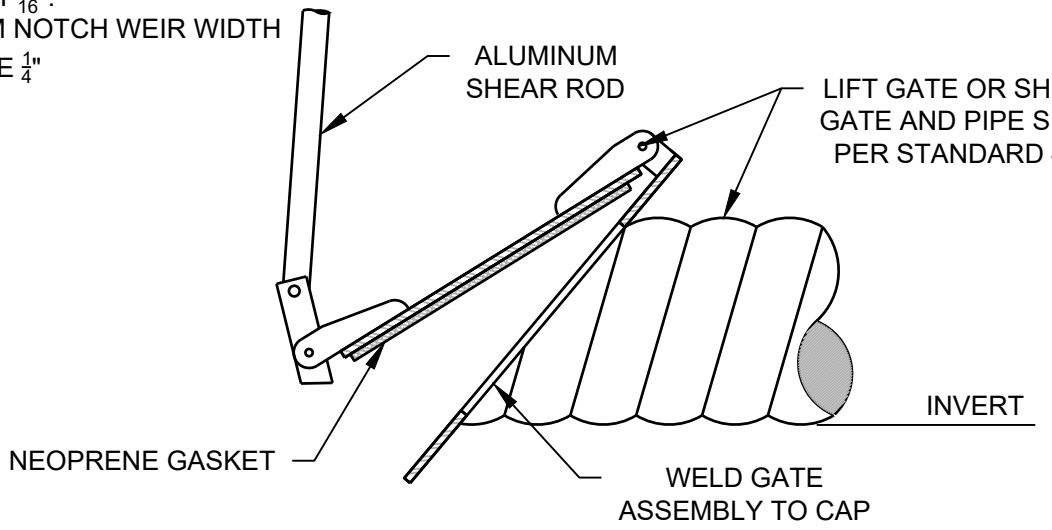

LIFT GATE ASSEMBLY

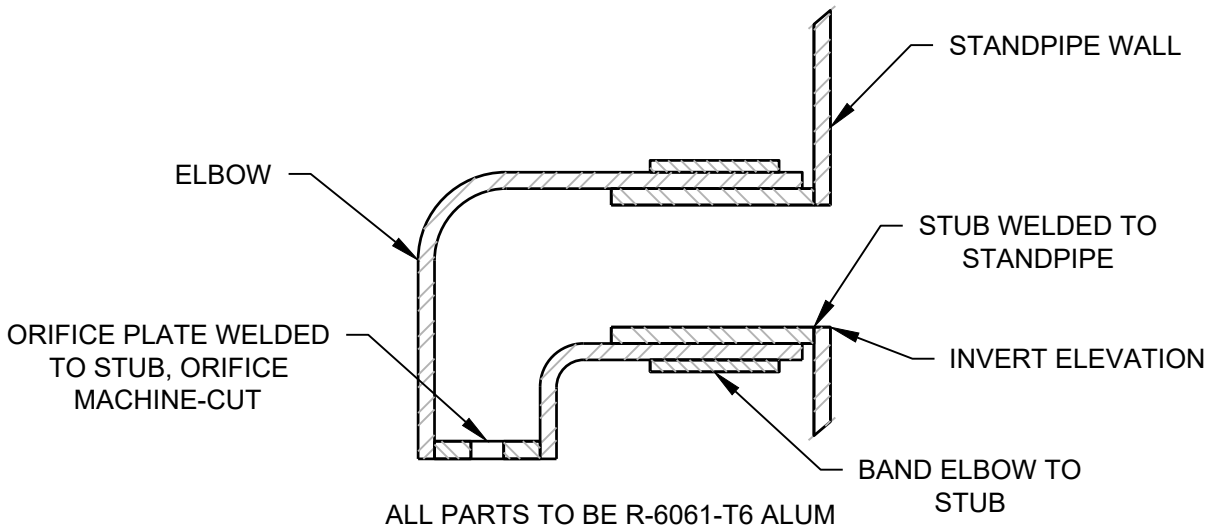

ALL PARTS TO BE R-6061-T6 ALUM

SECONDARY ORIFICE DETAIL

MONROE WASHINGTON	DESCRIPTION: LIFT GATE ASSEMBLY AND SECONDARY ORIFICE DETAIL	DESIGNATION: 413
	SCALE: NOT TO SCALE	REVISED: FEB 1,2024

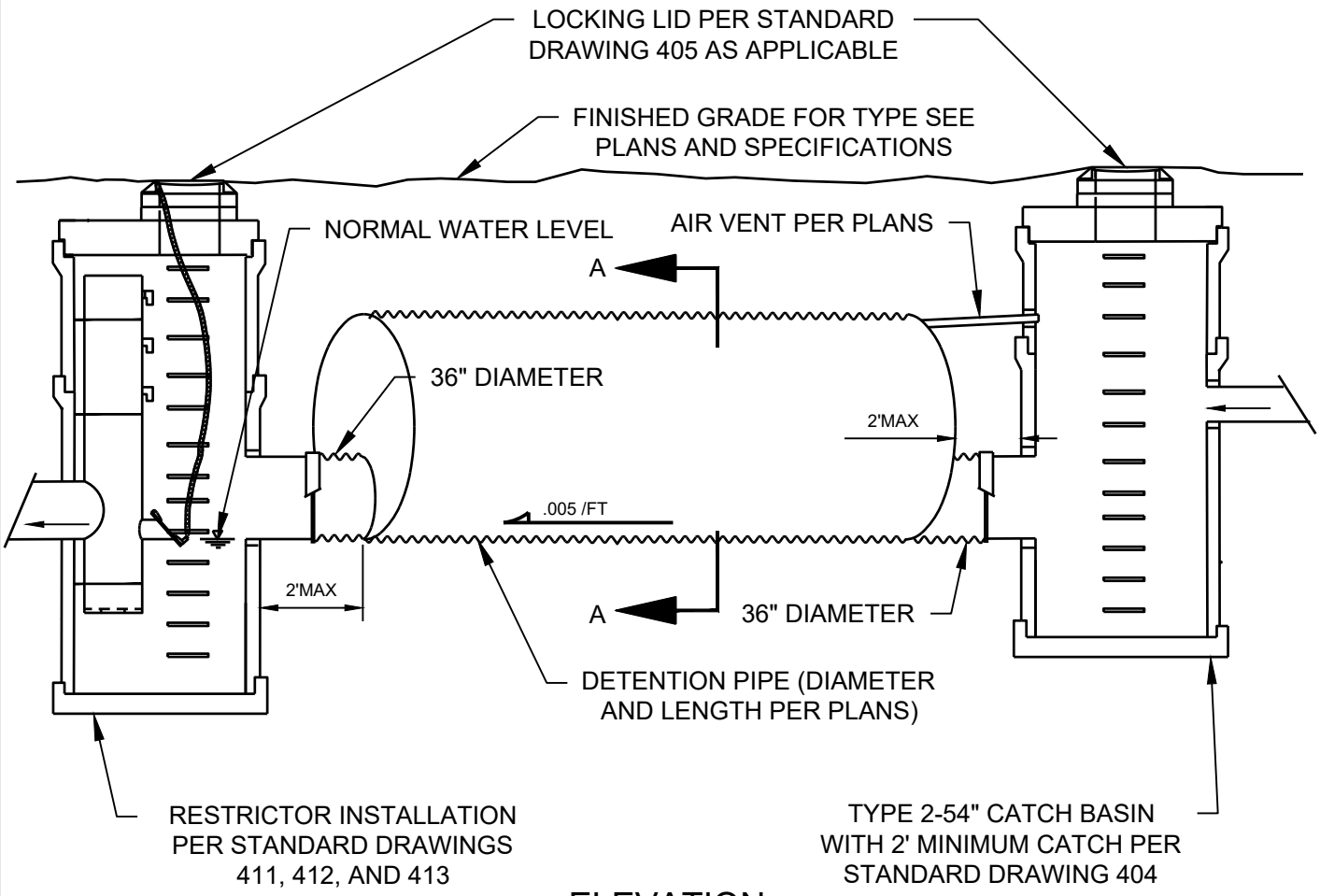

ELEVATION

NOTES:

1. DETENTION PIPE SHALL BE FABRICATED FROM ONE OF THE FOLLOWING:

   1.1. CORRUGATED ALUMINUM PIPE 12 GAGE MIN

   1.2. HIGH DENSITY POLYETHYLENE PIPE

2. W = MAXIMUM WIDTH OF TRENCH
   W = 40" FOR PIPES 15" OR LESS IN DIAMETER
   W=1-1/2" X I.D.+18" FOR PIPES 16" OR GREATER IN DIAMETER

3. COMPACT IN 8" LIFTS TO 90% MAXIMUM DENSITY

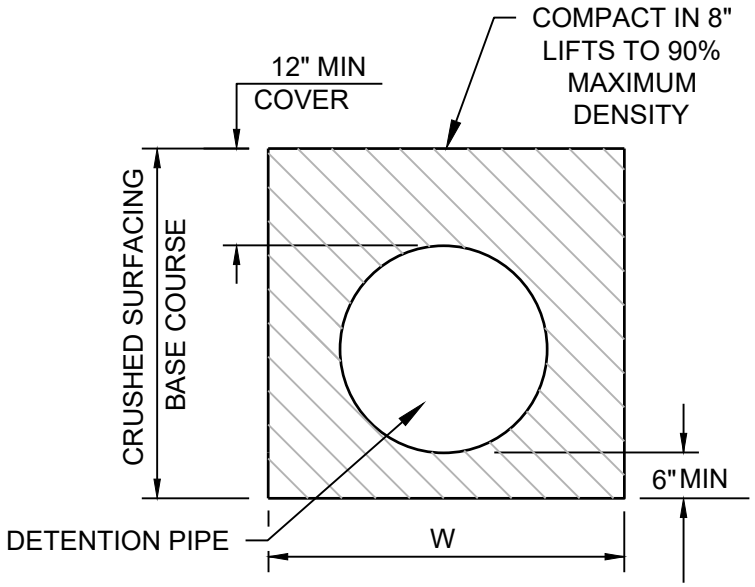

SECTION A-A

	DESCRIPTION	DESIGNATION
MONROE WASHINGTON	CLOSED UNDERGROUND DETENTION SYSTEM	414
	SCALE: NOT TO SCALE	REVISED: FEB 1,2024

PLANTING BEDS

TURF (LAWN) AREAS

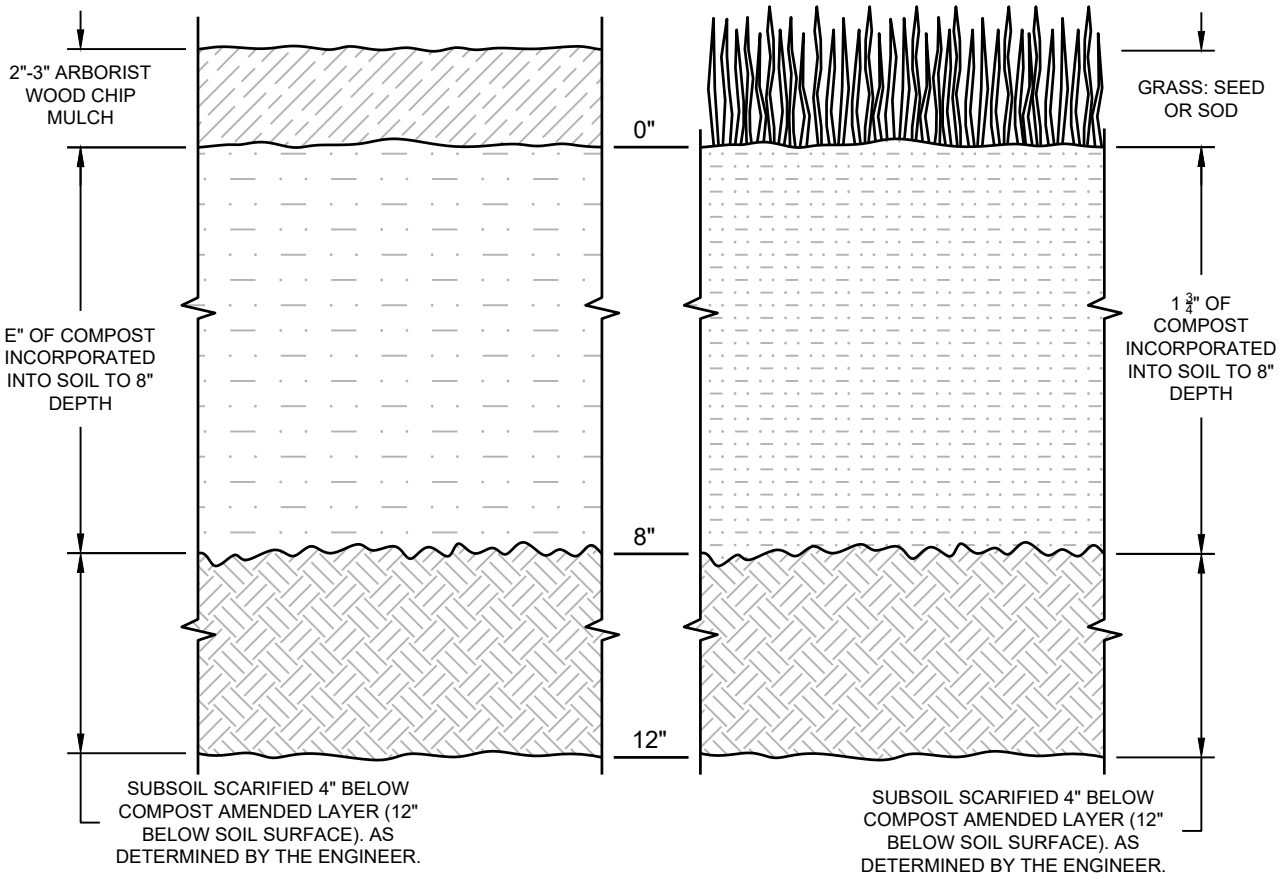

1. ALL SOIL AREAS DISTURBED OR COMPACTED DURING CONSTRUCTION AND NOT COVERED BY BUILDINGS OR PAVEMENT MUST BE AMENDED WITH COMPOST AS DESCRIBED BELOW.
2. SUBSOIL SHOULD BE SCARIFIED (LOOSENED) 4 INCHES BELOW AMENDED LAYER TO PRODUCE 12 INCH DEPTH OF UNCOMPACTED SOIL EXCEPT WHERE SCARIFICATION WOULD DAMAGE TREE ROOTS OR AS DETERMINED BY THE ENGINEER.
3. COMPOST MUST BE TILLED IN TO 8 INCH DEPTH INTO EXISTING SOIL OR PLACE 8 INCHES OF COMPOST AMENDED SOIL PER SOIL SPECIFICATION.
4. TURF AREAS MUST RECEIVE 1 ¾" OF COMPOST TILLED IN TO 8 INCH DEPTH OR MAY SUBSTITUTE 8 INCH OF IMPORTED SOIL CONTAINING 20%-25% COMPOST BY VOLUME. THEN PLANT GRASS SEED OR SOD PER SPECIFICATION.
5. PLANTING BEDS MUST RECEIVE 3 INCHES OF COMPOST TILLED IN TO 8 INCH DEPTH OR MAY SUBSTITUTE 8 INCHES OF IMPORTED SOIL CONTAINING 35%-40% COMPOST BY VOLUME. MULCH AFTER PLANTING WITH 2-3 INCHES OF ARBORIST WOOD CHIP MULCH OR APPROVED EQUAL.
6. SETBACKS: TO PREVENT UNEVEN SETTLING DO NOT COMPOST AMEND SOILS WITHIN 3 FEET OF UTILITY INFRASTRUCTURES (POLES, VAULTS, METERS, ETC.). WITHIN ONE FOOT OF PAVEMENT EDGE, CURBS AND SIDEWALKS SOIL SHOULD BE COMPACTED TO APPROXIMATELY 90% PROCTOR TO ENSURE A FIRM SURFACE.

MONROE WASHINGTON

DESCRIPTION

SOIL AMENDMENT AND DEPTH

DESIGNATION

415

SCALE

NOT TO SCALE

REVISED

FEB 1,2024

CITY OF MONROE PUBLIC WORKS
DESIGN, CONSTRUCTION AND OPERATIONS STANDARDS

SECTION 5
WATER DISTRIBUTION

TABLE OF CONTENTS

5.1 GENERAL REQUIREMENTS 1

5.1.2 General 1
5.1.2 Safety 1
5.1.3 Fire Protection 1
5.1.4 Definitions 1

5-2 DESIGN AND PERFORMANCE STANDARDS 1

5.2.1 Looped Systems 1
5.2.2 Pipe Dimensions 2
5.2.3 Pipe Cover 2
5.2.4 Utility Clearances 2
5.2.5 Pipe Deflection 3
5.2.6 Vertical Bends 3
5.2.7 System Pressure 4
5.2.8 Design Velocity 4
5.2.9 Thrust Blocks 4
5.2.10 Valves 4
5.2.11 Hydrants 4
5.2.12 Water Service Lines 6
5.2.13 Water Meters 6
5.2.14 Backflow Prevention 6
5.2.15 Backflow Prevention Assemblies 7
5.2.16 Pressure Reducing Station 9
5.2.17 Fire Sprinkler System 9

5.3 CONSTRUCTION DRAWINGS 10

5.3.1 Review and Approval 10
5.3.2 Drawing Requirements 10

5.4 MATERIALS 10

5.4.1 General 10
5.4.2 Pipe 11
5.4.3 Joints and Fittings 11
5.4.4 Pipe Bedding 11
5.4.5 Backflow Prevention Assemblies 12
5.4.6 Valves 12
5.4.7 Valve Assemblies 13
5.4.8 Valve Boxes 13
5.4.9 Valve Marker Posts 13
5.4.10 Hydrants 13
5.4.11 Hydrant Guard Posts 14
5.4.12 Thrust Blocking 14
5.4.13 Service Lines From Meter To The Building 14

5.4.14 Pressure Reducing Stations 14
5.4.15 Backfill 17

5.5 CONSTRUCTION REQUIREMENTS 17

5.5.1 Administration 17
5.5.2 Grade and Alignment 17
5.5.3 Existing and Abandoned Utilities 18
5.5.4 Trenches 18
5.5.5 Cribbing and Shoring 18
5.5.6 Unsuitable Material 18
5.5.7 Trench Dewatering 19
5.5.8 Bedding the Pipe 19
5.5.9 Water/Sewer Separation ..... **Error! Bookmark not defined.**19
5.5.10 Water/Sewer Crossing 19
5.5.11 Pipe Wrap 19
5.5.12 Handling Pipe 19
5.5.13 Cutting Pipe 19
5.5.14 Laying Pipe on Curves 20
5.5.15 Thrust Blocks 20
5.5.16 Connections to Existing Mains 20
5.5.17 Hydrants 21
5.5.18 Valve Boxes 21
5.5.19 Valve Marker Posts 21
5.5.20 Water Meters 21
5.5.21 Water Service Lines 22
5.5.22 Fire Protection Systems/Underground Fire Supply Lines 22
5.5.23 Typical Hydrostatic Pressure Testing with Temporary Backflow Prevention 23
5.5.24 Flushing and Disinfection of Water Mains with Temporary Backflow Prevention and Final Connections 24
5.5.25 Required Documentation 25

APPENDIX A - WATER CONSTRUCTION NOTES 26

5.6 STANDARD WATER DRAWINGS 27

CITY OF MONROE PUBLIC WORKS
DESIGN, CONSTRUCTION AND OPERATIONS STANDARDS

SECTION 5
WATER DISTRIBUTION

5.1 GENERAL REQUIREMENTS

5.1.1 General

Design and construction of water mains and appurtenances shall conform to the City of Monroe Water System Plan, these City of Monroe Public Works Design, Construction, and Operations Standards, the American Water Works Association (AWWA) Specifications, International Building Code (IBC) as adopted by Washington State, State of Washington Department of Health (DOH) Water System Design Manual, International Fire Code (IFC) as adopted by the City of Monroe, the Uniform Plumbing Code (UPC) and Section 7-11 of the WSDOT Standard Specifications. If conflicts occur, these Standards and Specifications shall have precedence.

5.1.2 Safety

The developer shall comply with all applicable safety standards and requirements as set forth by WISHA and the Washington State Department of Labor and Industries.

5.1.3 Fire Protection

The Snohomish Regional Fire and Rescue must approve all proposed on-site fire protection improvements. The approval of the fire department connection (FDC) is required prior to construction of the on-site fire protection improvements. Backflow prevention devices may be installed in the interior or exterior of commercial and residential buildings with fire sprinkler systems unless otherwise approved by the Director.

5.1.4 Definitions

Refer to Section 1 for definitions of terms and acronyms used in this chapter.

5-2 DESIGN AND PERFORMANCE STANDARDS

5.2.1 Looped Systems

5.2.1.1 Dead End

New water mains shall be designed in anticipation of future development or redevelopment beyond the boundaries of the proposed project.

Unless otherwise approved by the Director, a water main dead end is not permitted. Whenever possible, all new water mains shall be looped to existing water mains. Where mains cannot be looped, a fire hydrant shall be provided at

the end of the water main for flushing purposes. Dead ends for future mains will require a temporary blowoff assembly.

5.2.1.2 Easement

All water mains on private property that are looped back to the public right-of-way or are connected to the general public system shall be installed in utility easements granted to the city. The minimum easement width shall be 20 feet.

5.2.2 Pipe Dimensions

In general, the minimum water main diameter shall be 8-inches for all looped systems or systems that have the potential to be extended and/or looped in the future. The Director may require a larger diameter main to meet fire protection requirements and future development requirements as outline in the City of Monroe Water System Plan. In non-residential zones, the minimum water main diameter shall be 12-inches or as determined by the Director.

In residential projects a City owned 4-inch diameter main may be allowed if it eliminates the likelihood of excessively long service lines from the water meters to the dwelling units if the following criteria are met:

1. There is no potential or need for future extension or connection of the 4-inch main to another water main.
2. There is no need now or in the future for a fire hydrant on the 4-inch main.
3. There will be a maximum of 12 dwelling units served by the 4-inch main.
4. Where residential fire sprinkler systems are required, the designer shall provide written analysis that demonstrates the fire flow requirements are met with the available pressure.
5. The length of the 4-inch main is 200 feet or less.
6. The 4-inch main ends with a blow-off assembly in an easily accessible location with a convenient method to dispose of the flush water without damage to the surrounding property.

Approval by the Director of for use of a 4-inch water main will be on a case-by-case basis.

Supply lines for a fire hydrant may be 6-inch diameter if the supply line is not more than 50 feet long and the 6-inch main enables the hydrant to meet the fire flow requirements.

5.2.3 Pipe Cover

The minimum cover for water mains of 12-inch or smaller diameter shall be 36 inches to the top of pipe. The minimum cover for water mains with diameters larger than 12 inches shall be 48 inches to the top of pipe. The maximum depth shall not be greater than 60 inches to the top of pipe.

5.2.4 Utility Clearances

Water mains and sewer mains shall be separated horizontally a minimum of 10 feet, measured from the outside of the pipes. Water mains shall be located above sewer mains at crossings to provide a minimum vertical separation of 18 inches between the

bottom of the water pipe and the crown or top of the sewer pipe. Deviation Request if local conditions prevent the minimum vertical or horizontal separation, refer to Section C1-9 of the DOE Criteria for Sewage Works Design.

5.2.5 Pipe Deflection

Maximum Permissible Deflection in Laying Mechanical-Joint Pipe

Pipe Diameter (Inches)	Max. Permissible Deflection (Inches) For Pipe Length				Approx. Curve Radius (Feet) Produced by a Series of Deflections			
	12-ft	16-ft	18-ft	20-ft	12-ft	16-ft	18-ft	20-ft
3	16	23	25	27	105	130	155	180
4	16	23	25	27	105	130	155	180
6	14	19	22	24	120	160	175	200
8	11	14	16	18	160	220	240	265
10	11	14	16	18	160	220	240	265
12	11	14	16	18	160	220	240	265
14	7	10	11	12	250	310	350	400
16	7	10	11	12	250	310	350	400
18	6	8	9	10	290	380	430	480
20	6	8	9	10	290	380	430	480
24	5	7	7	8	350	440	555	600
30	5	7	7	8	350	440	555	600
36	4	6	6	7	430	510	650	690

Maximum Permissible Deflection in Laying Push-In Joint Pipe

Pipe Diameter (Inches)	Max. Permissible Deflections (Inches) Per Pipe Length				Approx. Radius of Curve Produced by a Series of Deflections			
	12-ft	16-ft	18-ft	20-ft	12-ft	16-ft	18-ft	20-ft
3	10	14	15	17	175	220	260	280
4	10	14	15	17	175	220	260	280
6	10	14	15	17	175	220	260	280
8	10	14	15	17	175	220	260	280
10	10	14	15	17	175	220	260	280
12	10	14	15	17	175	220	260	280
14	6	8	9	10	290	380	430	480
16	6	8	9	10	290	380	430	480
18	6	8	9	10	290	380	430	480
20	6	8	9	10	290	380	430	480
24	6	8	9	10	290	380	430	480
30	4	5	6	7	430	615	650	690
36	4	5	6	7	430	615	650	690

5.2.6 Vertical Bends

Vertical bends are only allowed with Director's approval.

5.2.7 System Pressure

The water system shall be designed to maintain a minimum residual pressure of not less than 30 psi at service connections, under maximum instantaneous fire flow demand.

5.2.8 Design Velocity

Design velocities shall be less than or equal to 10 feet per second under peak hour demand conditions.

5.2.9 Thrust Blocks and Pipe Restraint

Ductile iron water main designs shall include concrete thrust blocks. Standard Drawings 514 through 516 should not be used to substitute for professional engineering design, particularly in situations involving large diameter pipelines (greater than 12-inches), high velocity situations (greater than 8 feet/sec), or where soil type or stability may be questionable.

In some situations, mechanically restrained joints or locking gaskets may be required, depending on site conditions (e.g., poor soils or location within soil fill areas). joint restraints shall also be required at valves and bell joints where future extensions may occur.

5.2.10 Valves

5.2.10.1 Location and Spacing

Valves shall be installed on all branches of intersections. The maximum valve spacing shall be 500 feet. The Director may require additional valves in high-density areas.

Air vacuum valves shall be installed at all high points in mainlines.

5.2.10.2 Valve Types

Gate valves shall be provided on 12-inch and smaller diameter water mains.

Gate valves shall be provided at all hydrants and fire protection service line connections at the main.

Butterfly valves are required for water mains larger than 12 inches.

5.2.11 Hydrants

See Standard Drawing 506.

5.2.11.1 Sizing and Main Connections

Hydrant supply lines shall be sized to provide the fire flow required by the currently adopted edition of the International Fire Code as amended by the City of Monroe. Supply lines from the service main to the hydrant that are up to 50 feet long shall be at least 6-inch diameter. Supply lines longer than 50 feet shall be 8-inch diameter. When more than one full length of pipe is used (up to 50 feet), field lock gaskets shall be installed in the bells.

5.2.11.2 Location

The location of fire hydrants, auxiliary gate valves, and supply lines shall conform to Standard Drawing 506. Fire hydrant feed lines shall be oriented at right angles to the supply main in conformance with Standard Drawing 506. Fire hydrants shall be located 3 feet minimum from face of the curb or 2 feet minimum from back edge of a sidewalk or 10 feet minimum from edge of pavement if no curb is present. All hydrants are to be installed within public right-of-way or a City water easement.

5.2.11.3 Clearance

Hydrants shall be positioned with a 3-foot clearance on all sides, in clear view of approaching vehicles for a distance of 50 feet. The approach line-of-sight shall be free of shrubs, trees, fences and other landscaping. Provide for vehicular traffic protection when necessary, per Standard Drawing 506.

5.2.11.4 Spacing and Proximity to Buildings

The fire hydrant spacing shall be determined per the International Fire Code (IFC) Appendix C Table C102.1

Hydrants shall not be closer than 50 feet to the structure served.

The distance shall be measured along the route that fire equipment will travel.

5.2.11.5 Ditch Crossing

Enclose ditch lines with an appropriately sized culvert pipe not less than 12 inches in diameter and 12 feet in length centered on hydrant to provide access to hydrants positioned beyond the ditch line (away from the adjacent roadway).

5.2.11.6 Paint

Fire hydrant body shall be painted with two coats of safety red Sherwin Williams industrial enamel B54R38. Hydrant side port caps shall be painted with Sherwin Williams Corothane (1)-M10-Alluminum B65S14. The fire hydrant bonnet shall be painted with Sherwin Williams paint per NFPA standard 291 as per flow rate and colors as follows:

1500+ GPM	SW 6958	Dynamic Blue
1000-1499 GPM	SW-6739	Eco Green
500-999 GPM	SW-B54E39	Safety Orange
<500GPM	SW B54R38	Safety Red

5.2.12 Water Service Lines

Residential connections shall be a minimum diameter of 1-inch and shall use one section of copper tube size (CTS) Rehau Municipex Pex or City approved equivalent (250 psi), or copper tubing type K from the main to the meter, without any joints.

Non-residential connections shall have a minimum diameter of 2-inch and shall use one section of CTS Rehau Municipex Pex or City approved equivalent, continuous from the main to the meter, without any joints. Pipe and fittings shall be rated for 250 psi.

5.2.13 Water Meters

5.2.13.1 Location

Water meters shall be located as close to the right of way line as possible. In residential plats, water meters shall be located in the right-of-way in the planter area between curb and gutter and sidewalk. Water meters and boxes are to be shown on the construction drawings a minimum of 10’ away from street or planter trees. In commercial developments, water meters shall be located within right-of-way planter or as approved by the Director. Water meters shall be located within the public right-of-way when available, or designated water utility easement.

5.2.14 Backflow Prevention

Cross Connection Control shall be based on WAC 246-290-490 and Monroe Municipal Code Chapter 13.06 and the City of Monroe’s Cross Connection Control Program.

A temporary double check valve assembly (DCVA) shall be used to prevent contaminated water of a new mainline connection from entering the existing distribution system during construction. The DCVA shall be positioned at the point of the connection (tap) between the new main and the existing main. Main line connections are considered 4-inch pipe size or larger. The minimum size of the temporary DCVA shall be 4-inch. All backflow assemblies shall be tested and approved by a certified backflow assembly tester prior to water being allowed to enter the new main for flush and test purposes. Temporary back flow assemblies for new fire lines must be sized for appropriate full flow GPM as per NFPA requirements of which will be determined by the NICET Level 3 fire system designer.

The minimum level of backflow prevention required for irrigation is a double check valve assembly.

Fire services shall require a double detector check valve assembly within the building structure as per approval by the Director.

Air gaps and/or reduced pressure backflow assemblies are required for potential high health hazard situations.

5.2.15 Backflow Prevention Assemblies

5.2.15.1 General

Backflow prevention assemblies are regulated under MMC 13.06 Cross-Connection Control. When required, these assemblies shall meet the requirements of the MMC and these Standards. Plans shall be submitted to the City of Monroe for review by the Cross Connection Control Specialist (CCS) and the Building Department. A City of Monroe plumbing permit is required for all backflow prevention assembly installations.

When trap primers are required in buildings, a proper air gap (a minimum of two times the supply pipe diameter or minimum of 1-inch) shall be provided between the potable water supply and the sewer connection.

Drains shall be sized to carry the full-rated flow of the discharging backflow assembly and shall be double screened and double banded on both ends.

5.2.15.2 Required Installations

A backflow prevention assembly shall be provided at any premise where installation is deemed necessary to accomplish the purpose of these regulations in the judgment of a certified cross connection specialist or the Public Works Director. Situations where a backflow assembly will be required include, but are not limited to the following:

- If the nature and extent of any activity on a premises, or the materials used in connection with any activity on a premises, or materials stored on the premises, could contaminate or pollute the potable water supply.
- On a premises having one or more cross connections.
- When existing internal cross connections are not correctable, or intricate plumbing arrangements make it impractical to ascertain whether or not a cross connection exists.
- When a repeated history of cross connections is established or reestablished.
- If unduly restricted entry is determined so that inspections for cross connections cannot be made with sufficient frequency or with sufficient notice.
- If materials of toxic, objectionable, or hazardous nature, either liquids, solids, or gases are being used such that, if back siphoning occurs, a health hazard could result.

- On any mobile apparatus that connects to or takes water from the City's water system.

- On any premises where a cross connection report form has not been filed with the City of Monroe Public Works Department.

- Private wells or auxiliary water supplies on the same premises where the City of Monroe metered supply is delivered are required to have an RPBA installed at the meter or location acceptable to the City of Monroe.

- At irrigation system connections and fire service connections.

5.2.15.3 Backflow Prevention Device Installation Requirements

All backflow prevention devices shall be suitably supported and braced to assure stability and prevent movement.

When a RPBA is located inside a building or structure, it shall be installed in a location where the occasional relief valve spitting and the possible constant discharge in the event of a fouled check valve will not be cause damage. An approved air gap funnel assembly, provided by the manufacturer or fabricated for the specific installation, may be installed to handle the occasional relief valve spitting. A drain line from the funnel assembly may be extended to an adequately sized floor drain of equal or greater size. The developer shall check with the manufacturer for the relief valve discharge rate to properly size the drain.

The maximum height for backflow devices is 5 feet unless an OSHA approved platform is provided.

Backflow prevention devices shall not be installed above electrical panels or motors.

When installation is complete, the City's Cross Connection Control Specialist (CCS) will inspect each backflow assembly to see that it was installed properly. A City or City approved Backflow Assembly Tester (BAT) will test each new assembly to see that the assembly is functioning properly. All backflow assemblies must pass inspection and testing before occupancy may be released for any building. It is the building owner's/manager's responsibility to ensure that all backflow assemblies are tested annually by a tester of their choice. Test reports must be turned into the City of Monroe Water Department annually.

5.2.15.4 Location and Clearance

Backflow prevention assemblies shall be provided at the service connection and/or within the premises. Assemblies shall be located at the point of delivery of the water supply, before any branch in the line, downstream of any pressure-reducing valve on private property, in a location approved by the Public Works Director or Cross Connection Control Specialist (CCS).

Assemblies shall be located to provide protection from freezing, flooding, and other severe weather conditions.

Backflow prevention devices shall not be located in any area subject to flooding, with the exception of irrigation DCVA assemblies. An assembly that is located in a vault or basement shall have adequate drainage.

The access to a device located inside a building or structure shall have minimum dimensions of 3-feet wide by 5-feet high. There shall be no obstacles or structures interfering with these dimensions that may prevent access to the device.

Provide a minimum clearance around assemblies for removal of internal parts. Devices 2 inches and smaller shall have at least 6 inches clearance on all sides of the device. All devices larger than 2 inches shall have a minimum clearance of 12 inches on the backside, 24 inches on the test-cock side, and 12 inches below the device.

5.2.16 Pressure Reducing Station

Vaults or other equipment shall have a subgrade drainage system connected to the station sump or drain.

Install pressure reducing stations at locations as directed by the Director. The station shall be adjusted to control downstream pressure as determined by the Director or designee.

5.2.17 Fire Sprinkler System

5.2.17.1 System Designer Requirements

A licensed fire sprinkler system designer (Level III certificate of competency holder (NICET)) or licensed professional engineer for Washington State shall prepare, stamp, sign and date the building fire sprinkler system design for the fire protection supply line and fire department connection line for all types of buildings, commercial and residential, as applicable.

The International Fire Code (IFC), as adopted by the City of Monroe, defines the minimum fire flow requirements. The design engineer shall submit design calculations for review.

5.2.17.2 Design Requirements

The fire sprinkler system supply line diameter shall be a minimum of 4-inches. The pipe material shall be Class 52 Ductile Iron. The remote fire department connection shall be within 4 to 50 feet of a hydrant and at least 50 feet away from the building to be protected. The Fire Marshal shall determine the location of the fire department connection.

No domestic or irrigation service connections may be installed on the fire protection supply lines or on fire hydrant supply lines between the hydrant valve and the fire hydrant.

The gate valve controlling the fire sprinkler supply line shall be marked with a 2-inch diameter schedule 40 PVC pipe and cap in a dedicated fire gate-valve box. Cap shall be labeled in permanent marker with “Fire Valve.”

5.3 CONSTRUCTION DRAWINGS

5.3.1 Review and Approval

All water system improvement designs shall be submitted to the Director for review and approval.

5.3.2 Drawing Requirements

The following items shall be included on water system drawings:

- Existing utilities within the street right-of-way of water system improvements.
- Existing utilities within 25 feet of water main within tracts or easements.
- All proposed and existing easements showing all water mains, hydrants, meters, and other appurtenances on private property located within a minimum 20-foot wide easement.
- A maintenance access to the easement.
- Plan and profile of the water main showing elevations and clearances of sewer mains, water mains, and storm drains where they cross each other.
- Crossing clearances shall be shown either at each crossing on the plan or in a crossing table.
- All pertinent water detail drawings.
- Standard Water Notes. See Appendix A of this Section.

5.4 MATERIALS

5.4.1 General

All pipes, fittings, valves, hydrants, joints, and other components shall conform to AWWA, APWA/WSDOT standards, and be acceptable for use by the City of Monroe.

Metal thickness and manufacturing process shall conform to applicable portions of ASTM Standards A21.10, A21.11, B16.2, and B16.4.

5.4.2 Pipe

All water main distribution pipe shall be Class 52 ductile iron pipe, cement lined, standard class rating of 350 psi conforming to ANSI A21.51 and AWWA C151.

Pipe extending from the water main to the meter for all services up to 2-inch diameter shall be Rehau Municipex Pex a, or type K copper tubing. Service lines larger than 2-inch diameter shall be HDPE polyethylene or Class 52 Ductile Iron.

The pipe shall be furnished with mechanical joint or push-on joint, conforming to ANSI/AWWA C111/A21.11-85 standards, except where flanged joints are specified.

Brass Piping shall conform to ASTM B43.

Ductile Iron Pipe shall be Class 52 Ductile Iron Pipe, cement lined, standard thickness Class 52, unless otherwise specified and shall conform to the standards of USA Standard A21.51 (AWWA C151), and be installed in accordance with the manufacturer's recommendations. Grade of iron shall be 60-42-10 and the exterior shall be coated with an asphaltic coating. Each length shall be plainly marked with the manufacturer's identification, year cast or casting period, thickness and class of pipe. The pipe shall be furnished with mechanical joint or push-on joint, conforming to ANSI/AWWA C111/A21.11-85 Standards, except where flanged joints are specified.

5.4.3 Joints and Fittings

Connection types shall be specified as push-on-joint (Tyton), mechanical joint (MJ), or flanged as indicated on the drawings.

All fittings for ductile iron pipe shall be ductile iron compact (short body) fittings conforming to AWWA C153 or Class 250 gray iron conforming to AWWA C110 and C111. All fittings shall be cement mortar lined conforming to AWWA C104. Plain end fittings shall be ductile iron if mechanical joint retainer glands are installed on the plain ends. All fittings shall be connected by flanges or mechanical joints.

Flanges shall be Class 125, drilled in accordance with ANSI A21.10.

Rubber gaskets for push-on-joint (Tyton) or mechanical joint (MJ) shall conform to AWWA C110, C111 or C153.

Where shackle restraint is required, tie rods shall be ¾-inch diameter; tie bolts shall be ¾-inch conforming to Star National Products No. SST7 or approved equal.

Restrained joint assemblies shall be Star National No. S11 or approved equal. All parts shall be cadmium plated.

5.4.4 Pipe Bedding

Bedding material, shall be as specified in Standard Detail 102. Bedding is defined as 6 inches below the pipe, around the pipe and 12-inches above the pipe.

5.4.5 Backflow Prevention Assemblies

The following types of assemblies on the approved Washington State Department of Health list may be used on water distribution systems as required:

Reduced Pressure Detector Assembly (RPDA)
Reduced Pressure Backflow Assembly (RPBA)
Double Check Detector Assembly (DCDA)
Double Check Valve Assembly (DCVA)
Air Gap

If assemblies are to be vertically oriented, use a type and model approved by the DOH for vertical installation.

Backflow assemblies for fire protection supply lines shall have approved integrated shut-off valves as part of the assembly.

5.4.6 Valves

5.4.6.1 General

Resilient seat, opening counter-clockwise, non-rising stem type, with double O-ring seal equipped with standard 2-inch square stem nuts.

Valves shall be flanged or mechanical joint, suitable for installation with the type and class of pipe being used.

5.4.6.2 Air and Vacuum Release Valves

Air and vacuum release valves shall be Crispin CRVL-10 or 20 or approved equal. See Standard Drawing 511.

5.4.6.3 Butterfly Valves

Butterfly valves shall conform to AWWA Standard C504-94 Class 150-B, with cast-iron short-body and O-ring stem seal. Butterfly valves in chambers shall have a manual crank operation. Buried butterfly valves shall have a standard 2-inch operating nut and valve box. Direct-buried valves shall be ground rated.

Only the following listed butterfly valves, or an approved equal, will be accepted:

Pratt “Groundhog”
M & H “450” or “4500”
Mueller “Lineseal 111”

5.4.6.4 Check Valves

Check valves for permanent installations other than for cross-connection control shall be rated to match the source pressure, unless otherwise specified, and shall have an adjustable tension lever and spring to provide non-slamming action

under all conditions unless otherwise specified. For backflow prevention see Section 5.4.5.

5.4.6.5 Gate Valves

Gate valve materials shall conform to AWWA C509-80 latest revision.

Gate valves shall conform to ANSI/AWWA C509 standards for resilient-seated disc gate valves. The valve seating shall be of the Mueller A2361 or A2362 DI Body Valves type, or approved equal. The valves shall be iron-bodied, iron disk encapsulated with rubber and bronze or epoxy coated, non-rising stem with "o" ring seals. The sealing rubber shall be permanently bonded to the disk to meet ASTM D429 tests for rubber to metal bond. All valves shall be rated for an operating pressure of at least 200 psi. The valves shall open counter-clockwise and be furnished with a 2-inch square operating nut. All interior and exterior valve surfaces shall be fusion-bonded epoxy coated, acceptable for potable water. All valves shall be vertical mounted and without gearings.

5.4.7 Valve Assemblies

The piping on the inlet side of the assembly shall be rigid brass or copper. Galvanized pipe is not allowed.

5.4.8 Valve Boxes

Valve boxes in paved areas shall be cast iron, two-piece units designed with tabs (lugs) on the cover. Direction of tabs shall be aligned with the pipe line it serves. The valve box shall be an (EJ) East Jordan valve box bottom project number (85556024U), a valve box top number (85557016U), and a valve box cover number (06800001U), or approved equal.

5.4.9 Valve Marker Posts

Valve marker posts shall be set as directed by the Director. Carsonite markers shall be blue, 5-feet long, with water decal and anchor. See Standard Drawing 507.

5.4.10 Hydrants

Hydrants shall conform to AWWA C502-85 standards. Fire hydrants shall have two 2-1/2-inch hose ports, one 4-1/2-inch pumper port (National Standard threads), 4-inch Storz Quick Connect and a 5-1/4-inch valve opening; 1-1/4-inch pentagon operating nut, counter-clockwise direction of opening; and positive and automatic barrel drain. Hydrants shall be provided with mechanical joint bottoms and breaking flange or lugs. Only the following hydrants will be accepted:

Mueller Centurion
Waterous Pacer WB-67-250
East Jordon 5CD250 Northwest Edition with 5-1/4 Valve

5.4.11 Hydrant Guard Posts

Hydrant guard posts, when required, shall be either reinforced concrete posts 8-inch by 8-inch by 6-feet long, or 6-inch diameter by 6-feet long Schedule 40 steel pipe, concrete-filled per Standard Drawing 507.

5.4.12 Thrust Blocking

Cement concrete blocking shall be comprised of Class 3000 cement concrete mix with plastic sheet protection between concrete and ductile iron, leaving all fitting bolts and nuts exposed.

5.4.13 Service Lines From Meter To The Building

Polyethylene tubing shall conform to the requirements of ASTM D2737 CTS for 1-inch, 1 ½-inch and 2-inch sizes. The pipe shall be copper tube size (CTS) and bear the seal of the National Sanitation Foundation for potable water pipe. Minimum working pressure shall be 250 psi. Solvent welded pipe joints will not be permitted.

Ductile iron pipe shall conform to the requirements in Section 5-4.02 Pipe for sizes 3-inch and larger.

5.4.13.1 Small Meter Services (3/4-inch x 5/8-inch, 1-inch, 1 ½-inch, 2-inch)

See Standard Drawings 501 and 502.

5.4.13.2 Large Services (3-inch, 4-inch, and 6-inch)

See Standard Drawing 505.

Tapping valve shall be cast iron with cast iron gate valve box and 18-inch cast iron valve box top section.

All valves in vaults shall be gate valves with hand wheel.

Pipe shall be ductile iron, Class 52.

Use of restrained mechanical joints and/or flange fittings at restrained joint locations.

Pipe assembly shall be sized according to meter size. See vault fitting and pipe size requirements on Standard Drawing 505.

Meter vault shall be a Utility Vault Co. Precast Vault or equal. The lid shall be Utility Vault Co. Spring Assisted Lid with traffic loaded locking steel covers or equal.

5.4.14 Pressure Reducing Stations

5.4.14.1 Pressure Reducing Valve

Valves 4-inch and larger shall be Clayton series 91-01 pressure reducing and sustaining valve.

Valves shall be equipped with the following:
- Main Valve Body and Cover: Ductile Iron ASTM A536
- Main Valve Trim (Disc Guide, Seat & Cover Bearing): Stainless Steel
- Disc: Buna-N Synthetic Rubber
- Diaphragm: Nylon Reinforced Buna-N Rubber
- Stem, Nut and Spring: Stainless Steel
- Pilots and Solenoids: CRD & CRL
- Pilot Control: Bronze ASTM B62
- Pilot Control Tubing and Fittings: Copper and Brass
- Pilot System: Shutoff Cocks on the Pilot Control System, plugs in other valve body taps
- Flow Clean Strainer
- Valve Position Indicator
- Speed Controls: Opening and closing
- Epoxy Coating: 4 mil fusion bonded both inside and out
- End Details Flanged: Ductile iron ANSI B16.42 150A

Valves, 3-inch and smaller, shall be Clayton 90-01 pressure reducing valve and shall be equipped with the same accessories as a 4-inch and larger valve, with the following exception: End Details Screwed: 250 & 300 ANSI B2.1.

Adjustment ranges shall be determined for each valve and shall be designated on the plans.

Valves shall be CLA-Val Company. No other manufacturers will be allowed.

5.4.14.2 Pressure Relief Valve

Pressure relief valves shall be Clayton Series 50-01 pressure relief valve.

Valves shall be equipped with the following:
- Main Valve Body and Cover: Ductile Iron ASTM A536
- Main Valve Trim (Disc Guide, Seat and Cover Bearing): Stainless Steel
- Disc: Buna-N Synthetic Rubber
- Diaphragm: Nylon Reinforced Buna-N Rubber
- Stem, Nut and Spring: Stainless Steel
- Pilots and solenoids: CRD
- Pilot Control: Bronze ASTM B62
- Pilot Control: Bronze ASTM B62
- Pilot Control Tubing and Fittings: Stainless Steel Type 303
- Pilot System: Shutoff Cocks on the Pilot Control System, plugs in other valve body taps
- Valve Position Indicator
- Epoxy Coating 4 mil fusion bonded both inside and out
- End Details Flanged: Ductile iron ANSI B16.42 150A

Adjustment ranges shall be determined for each valve and shall be designated on the plans.

Valves shall be CLA-Val Company. No other manufacturers will be allowed.

5.4.14.3 Pressure Gauge Assembly

Pressure gauge shall be 2 ½ inch No Shok 25.300-200 psi or equal. Pressure gauge ranges shall be determined for each gauge and designated on the plans. The pressure gauge assembly shall include a brass ¼ inch shut-off cock and brass needle valve. All assembly pipe shall be brass. Pressure gauge assemblies shall be mounted on tapping bosses on fittings or with pipe saddles. Tapping size shall be ½ inch minimum and tap shall be equipped with a ball valve.

5.4.14.4 Precast Concrete Vault

Vault shall have minimum inside dimensions of 11-feet 5-inches in length, 6-feet 2-inches in width, and 6-feet 8-inches in height.

5.4.14.5 Precast Concrete Catch Basin

Precast Concrete Catch Basin shall conform to Section 9-12.5 WSDOT/APWA Standard Specifications

5.4.14.6 Wye Type Strainer

Wye type strainers shall be Muessco #751 or equal with stainless steel screen.

5.4.14.7 Anchor Bolts

Anchor bolts shall be in accordance with ASTM A307. All anchor bolts, nuts and washers shall be stainless steel in all locations. Anchor bolts shall be Hilti Kwik bolt anchor or equal.

5.4.14.8 Expansion Bolts

Bolts, nuts and washers shall be 303 or 304 stainless steel; wedges shall be double plated spring steel.

5.4.14.9 Pipe Supports and Brackets

Pipe supports and brackets shall be equal to Fee and Mason. Adjustable pipe supports shall be equal to #291. Pipe brackets shall be equal to #155, heavy welded steel bracket with #1590 anchor chair. ¾ inch tubing brackets shall be equal to #327B, one hole clamp. Drainpipe supports shall be uni-strut. All supports and brackets shall be galvanized.

5.4.14.10 Painted Surfaces

All exposed piping, fittings, valves and appurtenance surfaces shall be painted except non-ferrous, corrosion-resistant ferrous alloys, and non-metallic materials. The painting system shall be a 2-component epoxy polyamide primer with an aliphatic polyurethane finish coat. Prime and finish coats shall each be a minimum 3 mils dry film thickness. Primer shall be Far West Paint X6390 and Finish coat shall be Skythane. Tnemec Series High Build Epoxoline and Series 73 Endurashield are acceptable substitutes. No other paint brands shall be used. No bleed through of the pipe bituminous coating shall be permitted. Prepare pipe surface as recommended by the paint manufacturer. Paint color shall be Far West Paint #257, Delphinium Blue.

5.4.15 Backfill

5.4.15.1 Controlled Density Fill

Controlled Density Fill (CDF) shall conform to Section 2-09.3(1)E WSDOT/APWA Standard Specifications and as per Standard Detail 102.

5.4.15.2 Foundation Material

Foundation Material shall conform to Sections 9-03.17 or 9-03.18 WSDOT/APWA Standard Specifications.

5.4.15.3 Gravel Backfill for Bedding

Gravel Backfill for Bedding shall conform to Section 9-03.12(3) WSDOT/APWA Standard Specifications and as per Standard Detail 102.

5.4.15.4 Bank Run Gravel for Trench Backfill

Bank Run Gravel for Trench Backfill shall conform to Section 9-03.19 WSDOT/APWA Standard Specifications.

5.4.15.5 Trench Backfill

Trench Backfill shall conform to Sections 9-03.15 or 0-03.19 WSDOT/APWA Standard Specifications and as per Standard Detail 102.

5.5 CONSTRUCTION REQUIREMENTS

5.5.1 Administration

Refer to Section 1.9 of these Standards.

5.5.2 Grade and Alignment

Prior to any pavement cutting or removal or excavation for pipe laying, the developer shall verify in the presence of the Director or designee, the locations and depth of the existing

water mains at the points where connections are to be made. The new main design profile shall be adjusted as necessary so neither a high spot nor a low spot is created in the main adjacent to the connection to the existing water mains.

5.5.3 Existing and Abandoned Utilities

The developer shall be responsible for determining the location of existing utilities and protecting them during construction. The developer shall verify all utility locations prior to construction by calling the Underground Locate service at 1-800-424-5555 or 811 at least 48 hours prior to any excavation.

The developer shall be responsible for all damages to all utilities (city-owned and others) due to the developer's activities. The developer shall notify the Director immediately and arrange for replacement of all damaged water system components. The developer shall coordinate directly with other utility agencies regarding damages to their respective systems.

Ends of abandoned water mains shall be plugged by a mechanical ductile iron plug or cap, or by filling with Class 3000 cement concrete for a minimum longitudinal length of 24 inches into the pipe end. Existing unused pipe within the footprint of a proposed building shall be completely removed or abandoned in place and filled completely with controlled density fill (CDF) by means of pressure grouting, and as determined by the City Inspector.

5.5.4 Trenches

See Standard Drawing 102.

Trench bottom width dimension shall be as follows with at least 1 foot of clearance on each side of the pipe:

Minimum: pipe diameter plus 2 feet
Maximum: pipe diameter plus 3 feet

5.5.5 Cribbing and Shoring

The developer is responsible for safety on the job site per Chapter 296-155 WAC.

The developer shall adequately shore trenches to provide safe working conditions in the trench and to protect the work, existing property, utilities and pavement. The shoring shall be according to the developer's design. The developer may elect to use a combination of shoring and overbreak, tunneling, boring, sliding trench shields or other methods of accomplishing the work, provided the method meets all applicable local, state and federal safety codes. Damages resulting from improper cribbing or from failure to crib shall be the sole responsibility of the developer.

5.5.6 Unsuitable Material

When peat, soft clay, quicksand, or other unsuitable material as determined by a geotechnical engineer is exposed in a trench, the material shall be removed and

replaced with Foundation Material Class A as specified in Section 3. All unsuitable material shall be loaded directly into trucks and hauled to an approved waste site obtained by the developer. Stockpiling of unsuitable material on the project site will not be allowed.

5.5.7 Trench Dewatering

Where water is encountered in the trench, it shall be removed during pipe-laying operations. Trench water or other deleterious materials shall not be allowed to enter the pipe at any time.

5.5.8 Bedding the Pipe

See Section 5-4.04.

5.5.10 Water/Sewer Crossing

Water mains crossing sewer lines shall be installed so that the bottom of the water main is at least 18 inches above the top of the sewer. An entire section of water pipe shall be positioned at the crossing so that the pipe section's midpoint is above the crossing point of the sewer pipe. The developer shall install such special structural support as conditions may warrant for the water and sewer pipe.

5.5.11 Pipe Wrap

In areas where corrosive soils exist or are found during water main installations, the Director may require the water main to be wrapped with a polyethylene encasement tube wrap per ANSI/AWAA C105/A21.5-99. Pipe-wrap joints shall be joined together with 10 mil thick black polyethylene tape conforming to ANSI/AWWA C105/A21.5-99.

5.5.12 Handling Pipe

All types of pipe shall be handled in a manner that will prevent damage to the pipe, pipe lining or coating. Pipe and fittings shall be loaded and unloaded using hoists and slings in a manner to avoid shock or damage, and under no circumstances shall the construction materials be dropped, skidded, or rolled against other pipe. Damaged pipe will be rejected, and must be removed from the project site within 24 hours.

Dirt or other foreign material shall be prevented from entering the pipes or pipe joints during handling or installation operations. Developers shall furnish and install a watertight plug of the appropriate size in the end of the water main anytime work is delayed or stopped.

5.5.13 Cutting Pipe

Pipe shall be cut with an abrasive saw or by a special pipe cutter. All pipe ends shall be square with the longitudinal axis of the pipe and the outside shall be beveled and otherwise smoothed so that good connections can be made without damaging the joint

gasket. Threads shall be cleanly cut. Oxyacetylene torch cutting of ductile iron pipe will not be allowed.

5.5.14 Laying Pipe on Curves

Long radius curves, either horizontal or vertical, may be laid with Class 52 ductile iron pipe by deflecting the pipe sections at the joints. If the pipe is shown curved in the drawings and no special fittings are shown, the developer may assume that the curves can be made by deflections at the joints with standard lengths of pipe. If shorter pipe lengths are required, the drawings will indicate maximum lengths that may be used. The amount of deflection at each pipe joint when pipe is laid on a horizontal curve shall not exceed the manufacturer's printed recommended deflections.

When rubber-gasketed pipe is laid on a curve, the pipe shall be jointed in a straight alignment and then deflected to the curved alignment.

Maximum deflections at pipe joints and laying radius for various pipe lengths are specified in 5.2.7 of this chapter. Otherwise, deflections shall conform to the manufacturer's recommendations and AWWA standards for the given type of pipe. The developer shall not cover the pipe until the City Inspector has been able to examine the pipe deflection. If deflection exceeds the manufacturer’s recommendations, then bends may be substituted if approved by the Director.

5.5.15 Thrust Blocks

As indicated on Standard Drawing 514, thrust blocks shall be placed at bends, tees, dead ends, crosses and as designated by the design engineer. Visqueen shall be used to cover and prevent fittings from contact with the thrust block concrete. All fittings, nuts and bolts, flanges and restraint devices shall be left accessible and free of concrete.

5.5.16 Connections to Existing Mains

The developer shall make all new taps and/or connections to existing water mains unless the Director approves otherwise. A City-approved private developer shall do all wet taps. The developer requesting the service shall bear all costs for the taps.

If the initial tap or extension requires shutting down an existing water main, the Director may require two weeks notification in order to place a public notice in the local paper. No taps that require shutting down a water main will be allowed on Friday or weekends.

The developer shall not operate any water system valves on existing mains. Designated city personnel will operate all valves to accomplish shutdowns and subsequent reactivations and flushing.

Also see Section 5.5.26 Hydrostatic Pressure Testing with Temporary Backflow Prevention.

After receiving satisfactory purity tests, the city inspector shall notify the developer. The inspector must be on site during the removal of the double check valve assembly and the final connection to the existing system.

5.5.17 Hydrants

Fire hydrants shall be installed in accordance with Standard Drawing 506.

If a hydrant is to be re-used, it must be pressure tested and be approved by the City Inspector. Existing hydrants in close proximity to new construction shall be replaced as necessary to conform to the current Standards and Specifications for hydrants. Hydrants shall be covered in bags until the water system is approved by the City Inspector.

5.5.18 Valve Boxes

The lug receiver slots shall be installed parallel to the direction of the water line flow. The valve and valve box shall be set plumb with the valve box centered on the operator nut. Valve boxes shall be set so that the cover will be flush with the finished pavement surface. All valves in unpaved areas shall have a 2-foot wide by 2-foot long by 4-inch-thick concrete pad placed around the valve box.

When the top of the valve operation nut is more than 3 feet below finished grade, a valve operator extension shall be installed per Standard Drawing 512. The minimum extension length shall be 12-inches.

The developer shall adjust valve boxes to finished grade. Backfill around the valve box shall be compacted to 95 percent.

5.5.19 Valve Marker Posts

Valve marker posts shall be set as directed by the City Inspector. See Standard Drawing 507.

5.5.20 Water Meters

5.5.20.1 Permanent Service Disconnection

With the Director's approval, a permittee may leave the corporation stop in place at the main and install a brass cap onto the corporation stop. Service lines from the main to private property must be removed.

5.5.20.2 Installation

See Standard Drawing 501 & 502.

5.5.20.3 Water Meter Boxes

Meter Box installation: Water meter boxes shall be installed onto a firm and non-yielding base to prevent meter boxes from settling. At locations that may be susceptible to extreme dampness or areas where ground water may collect or will not drain, supportive blocking is required to be installed for added meter box support as directed by the City Inspector.

Meter setters must be installed as per Standard Detail 501. The meter setters angle stop and dual check assembly must be properly aligned to accept a water meter. All water meter setters must pass City inspection prior to a water meter being set. If misalignment or damage to a meter setter, the meter box elevation, or stability issues occur after inspection, and staff attempts to set a meter and cannot due to above mentioned or other damage, the developer will be billed for an added site visit for the next meter installation attempt.

5.5.21 Water Service Lines

Services shall be installed as shown on Standard Drawing 501 and 502. Services associated with a new water main installation shall be installed from the main to meter setter and be subject to purity and hydrostatic testing with the new water main. Embed the pipe in bedding sand.

5.5.22 Fire Protection Systems/Underground Fire Supply Lines

5.5.22.1 Installer Certification

The installer of the fire protection service underground lines shall be licensed and certified as required by the office of the State Fire Marshall.

If the installer is different from the designer, then the installer must stamp, sign and date the fire protection system drawings, in addition to the designer's stamp, signature, and date, and provide the City a fully signed copy.

5.5.22.2 Exterior Fire Department Connections and Supply Lines

On the exterior FDC standpipe, the installation must include galvanized iron pipe fittings to allow for a 4-inch Storz 30-degree drop Fire Department Connection. The connection shall also include a locking FDC Storz cap system as per Standard Detail 510.

The fire protection service underground line shall be that portion of the line located behind a dedicated fire system valve located off a city water main connection. The dedicated fire line valve is considered private property with the fire protection system.

A temporary double check valve assembly (DCVA), not smaller than 4-inches, shall be installed between the city main and the new fire main to prevent cross contamination during new system testing and flushing.

In compliance with NFPA 24, hydrostatic pressure testing of the fire protection supply line and FDC line shall be a 2-hour test with a minimum pressure of 200 psi with 0 (zero) allowable loss. After hydrostatic testing, a drip check valve assembly shall be installed near the lowest portion of the FDC standpipe with a washed rock and fabric drainage pocket. Flushing of the FDC and supply line can then commence.

5.5.22.3 Fire Protection Service Line Restraint

Fire protection supply lines shall be restrained by thrust blocking on all mechanical joint fittings including mega lugs. All bell joints will have lock gaskets on both supply and FDC runs from the building exterior to the building interior floor flange.

5.5.22.4 Flush and Purity/Final Connection and Close out

As the supply line of the fire system is attached to the city water system, the developer shall conduct purity sampling after a full-flow flush with a target velocity of at least 10 feet per second. Also reference NFPA 24 required flush rates as per NFPA Table 10.0.2.1.3. The supply line and FDC runs shall be flushed at full flow with burlap bags attached to discharge hose ends to screen and inspect for debris. The flushing shall continue until the discharged water flow is debris free.

If flushing into the sanitary sewer system an approved air gap is required for discharge. The developer and City Inspector shall monitor the sewer system during the flushing procedure and act appropriately to assure no damage or overflow to the sewer system.

After hydrostatic pressure testing is completed and the water purity has been approved, the final connection shall be made in the presence of the City Inspector. The temporary double check valve assembly shall be removed, and pipe and sleeves (restrained) shall be installed and inspected for leaks under static line pressure. The City Inspector shall inspect that portion of the fire system exterior of the building up to the interior floor flange. After final inspection, the developer shall install a 2-inch diameter Schedule 40 PVC pipe and cap inside the private fire control valve box assembly accessible to within 8-inches below box lid. The developer shall use a permanent black marker to inscribe “Fire Valve” on the cap.

Final inspection sign-off and closeout occurs when the Developers Material and Test Certificate for Underground Piping Material Test Data Forms have been stamped with the Engineer’s and installer’s current state certification seal. Forms shall also include signatures and installation dates by the City Inspector, licensed installer, and property owner.

5.5.23 Typical Hydrostatic Pressure Testing with Temporary Backflow Prevention

See Section 5.5.19 Connections to Existing Mains.

The developer shall connect a temporary double check valve backflow assembly with two resilient wedge gate valves (minimum 4-inch diameter) to the end of the water line at the designated point of connection as shown on the approved drawings. A City-approved Certified Backflow Assembly Tester shall test the temporary backflow assembly and certify it. A list of City-approved testers is available through the City inspector. All associated costs are the developer’s responsibility. The temporary double

check valve backflow assembly will be required during pressure, flushing and purity tests.

Prior to flushing and disinfecting for new and reestablished systems, all water mains and appurtenances shall be pressure tested for leakage in accordance with City requirements. The water main and appurtenances shall be pressurized to a hydrostatic pressure of 250 psi, measured at the highest profile elevation in the water main. Domestic water mains require a one-hour pressure test, and fire protection supply lines require a two-hour test, during which time there cannot be any pressure loss.

The main shall be tested between valves or at a maximum distance of 500 feet along the main. Any leaks or imperfections shall be corrected before final acceptance. All air within the new water system shall be expelled prior to pressure testing.

As much as possible, no hydrostatic pressure shall be placed against the opposite side of the valve being tested. Test pressure shall be maintained while the entire installation is inspected. The developer shall provide all necessary test equipment and shall perform all work required for the tests. Insofar as is practical, tests shall be made with pipe joints, fittings and valves exposed for inspection. The developer shall perform the test to assure that the equipment to be used for the test is adequate and in good operating condition, and the air in the line has been released before requesting the City Inspector to witness the test.

5.5.24 Flushing and Disinfection of Water Mains with Temporary Backflow Prevention and Final Connections

As sections of pipe are constructed and before pipelines are placed in service, they are to be sterilized per the requirements of section 7-11.3 of the WSDOT Specifications.

All new, cleaned or repaired water mains and backflow prevention assembly installations require flushing and disinfection per AWWA Standard C651.

In all disinfection processes, the developer shall take precaution in flushing the chlorinated water from the new mains or repairs to assure the chlorinated water does no physical or environmental damage to property, streams, storm sewers, or any waterways. Flushing water shall be disposed in accordance with Washington State Department of Ecology and the AWWA Standards. The Director shall approve the disposal method prior to the time of disposal.

After hydrostatic testing approval following flushing procedure, the permittee shall request that the City Inspector collect water samples from the new water system. The samples shall be collected in sterilized bottles and tested by a DOH testing lab as designated by the City of Monroe. All samples must meet the DOH quality standards prior to water lines being placed into service. Currently, the City of Monroe has an accredited laboratory to test water purity samples with limited days and hours of operation. If the developer requests testing at times and dates that the City laboratory is closed, then the City inspector or water quality division designee may take the samples for testing to an alternative state accredited testing lab. When the City staff delivers samples to an alternative site, the developer will be billed by the City for alternative

laboratory sample testing fees and the for the time it takes City staff to deliver the samples and to receive the results of such tests.

Upon completion of the purity test, if satisfactory results are achieved and verified, then the permittee may request a final connection to the City main. Pipe sleeves or other permanent fittings shall be cleaned with 5-6% chlorine solution in the presence of the City Inspector. The temporary double check valve assembly shall be removed in making the final connection to the existing main only during the presence of the City Inspector. The system shall then be refilled and flushed as necessary to expel any air to the satisfaction of the City Inspector. The final connection shall be safely accessible and inspected for leaks under static line pressure. With the City Inspector's approval, the connection shall be properly bedded with a dry sand material, or as specified in Standard Detail 102, supported, backfilled, and compacted. The system shall be left in service with the fire hydrants bagged until the entire system is approved.

The developer will be billed for the amount of water used during the testing and flushing procedure.

5.5.25 Required Documentation

The following steps must be completed before the improvements will be accepted and performance bond released:

1. All easements must be reviewed, approved, and recorded.
2. The City construction inspector must have received, reviewed, and approved the record drawings.
3. Receipt of a satisfactory maintenance bond.
4. Bill of Sale

Upon completion of the work, the developer shall be required to furnish the Director with a written guarantee (financial security) covering all materials and workmanship for a period of two years after the date of final acceptance or plat recording, whichever is later, and the developer shall make all necessary repairs during that period at his own expense if such repairs are necessitated as the result of furnishing poor materials and/or workmanship.

The Developer shall provide the City with a Bill of Sale for all portions of the system that will become the property of the City.

APPENDIX A – WATER CONSTRUCTION NOTES

The following standard notes are required on all Water Plans:

A. All work and materials shall conform to the City of Monroe Public Works Design, Construction and Operations Standards, and the Washington State Standard Specifications for Road, Bridge, and Municipal Construction.
B. All approvals and permits required shall be obtained by the developer prior to the start of construction.
C. A preconstruction meeting shall be held with the City of Monroe Public Works Department prior to the start of construction.
D. It is the responsibility of the developer to have a copy of the approved plans at the construction site at all times.
E. Any changes to the design shall first be reviewed and approved by the Director.
F. The water main shall be installed only after the site or roadway subgrade is backfilled, graded and compacted in cut and fill areas.
G. All water mains shall be staked in the field under the supervision of a licensed land surveyor. The road centerline and curb line shall be staked to provide a reference point.
H. The developer shall notify property owners in writing 10 days prior to beginning work in existing easements. The property owner must sign a letter indicating satisfaction with the restoration of the existing easement before the City will accept the water main project.
I. Approximate locations of existing utilities have been obtained from available records and are shown for convenience. The developer shall be responsible for verification of locations and to avoid damage to any additional utilities not shown. If conflicts with existing utilities arise during construction, the developer shall notify the public works inspector and any changes required shall be approved by the Director prior to commencement of related construction on the project.
J. Water main crossings with other utilities must be installed to provide a minimum of one (1) foot separation, measured at the two closest edges of the pipes, unless otherwise approved by the Director. For crossings with sewer mains, the utility separation shall conform to the requirements found in the Criteria for Sewage Works Design, Section C1-9.
K. No connection to existing main lines will be allowed, except by means of an approved backflow prevention device, prior to satisfactory flushing, testing, disinfection, and receipt of satisfactory bacteriological tests.
L. The city inspector shall be contacted a minimum of 48 hours to schedule a tap or connection to an existing water main. The inspector shall be present at the time of the tap or connection. If the initial tap or extension requires shutting down an existing water main, the City may require two weeks notification in order to provide adequate public notice. No taps to the existing water main will be allowed on Fridays or weekends. The City of Monroe Public Works Department shall operate all water valves in right-of-way and water main easements.
M. Water mains located in soil fill areas shall be mechanically restrained
N. No part of the water system shall be covered, concealed or put into use until it has been inspected and approved by the city inspector.

5.6 Standard Water Drawings

Drawing #	Description
501	3/4” x 5/8” x1” Water Service
502	1 ½” x 2” Water Service
503	Reserved
504	Reserved
505	3”, 4”, 6” Water Service
505A	3”, 4”, 6” Water Meter Sections
506	Fire Hydrant Assembly
507	Fire Hydrant Guard Post and Valve Marker
508	Reserved
509	Blow-Off Assembly
510	4" FDC For Sprinkler and Standpipe
511	1” Air and Vacuum Release Valve
512	Valve Box & Extension
513	Tapping Tees
514	Horizontal Thrust Blocks
515	Blocking and Vertical Blocking Details
516	Blocking and Vertical Blocking Details
517L	DCVA 2.5” and Larger
517S	DCVA 2” and Smaller
518LI	Indoor DCDA 2.5” and Larger
518LO	Outdoor DCDA
519LI	Indoor RPBA 2.5” and Larger
519LO	Outdoor RPBA 2.5” and Larger
519SI	Indoor RPBA 2” or Smaller
519SO	Outdoor RPBA 2” or Smaller
520LI	Indoor RPDA 2.5” and Larger
520LO	Outdoor RPDA 2.5” and Larger
521	Atmospheric Vacuum Breaker (AVB)
522	Pressure Vacuum Breaker Assembly
523	Spill Resistant Vacuum Breaker Assembly
524	Air Gap
525	PRV Station Plan
525A	PRV Station Legend
526	Casing Detail

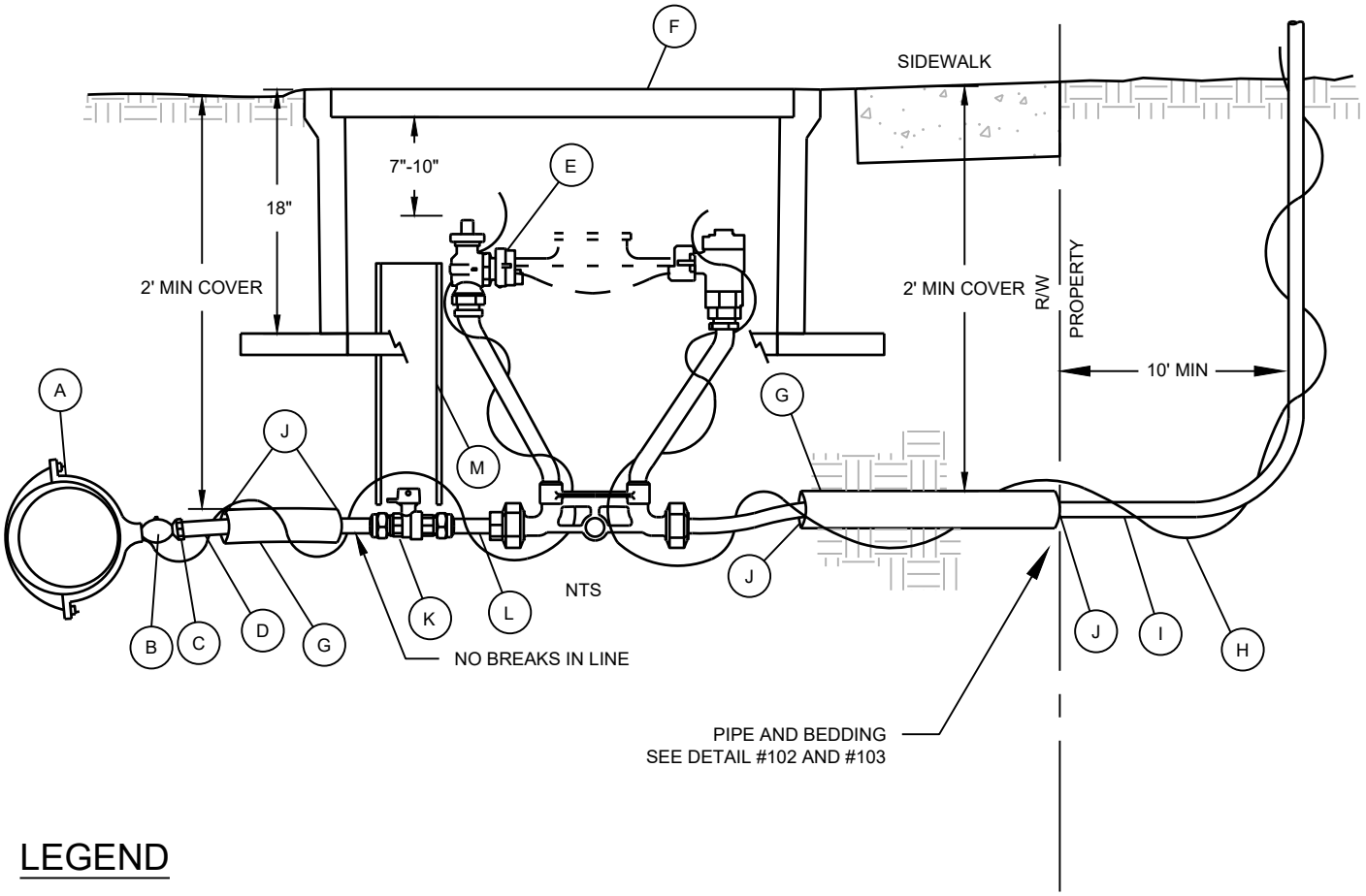

LEGEND

(A) WIDE BAND STAINLESS STEEL SERVICE SADDLE WITH IRON PIPE THREADS. FORD STYLE FS101 OR EQUAL. WHEN WATER MAIN MATERIAL IS C900 PVC PIPE THERE SHALL BE A MINIMUM OF 3 FEET BETWEEN TAPS AND STAGGER TAPS A MAXIMUM OF 45 DEGREES VERTICALLY. WITH ALL OTHER PIPES MATERIALS THERE SHALL BE A MINIMUM OF 2 FEET BETWEEN TAPS.

(B) 1" - A.Y. MCDONALD IPS BALL CORPORATION STOP - 300 PSI

(C) A.Y. MCDONALD COMPRESSION FITTING. FEMALE IRON PIPE THREAD BY FEMALE COPPER TUBE SIZE, QUICK JOINT.

(D) 1 INCH (MINIMUM) COPPER TUBE SIZE REHAU MUNICIPEX PEXa (200 PSI) OR COPPER TYPE K. SAND BEDDING FOR SERVICE LINE IS REQUIRED. SAND BEDDING SHALL BE 6 INCHES ABOVE AND BELOW PIPE.

(E) METER SETTERS SHALL BE A.Y. MCDONALD 1" COPPER METER SETTER 720-4122WDDD 44 12" OR APPROVED EQUAL. SETTERS SHALL HAVE HORIZONTAL UNION INLET WITH PADLOCK WINGS , DUAL CHECK VALVE AND HORIZONTAL UNION OUTLET.

(F) METER BOXES IN SHALL BE OLD CASTLE CARSON 1527 X 18 WITH OLD CASTLE LID #02001407 (LID, FL 1527P BLACK) TRAFFIC BOXES ARE TO BE SUPPORTED BY 4X8X16 SOLID CEMENT BLOCKS.

METER BOXES ARE TO BE FIRMLY SUPPORTED WITH SETTER CENTERED IN BOX AND BACKFILLED WITH $\frac{5}{8}$" MINUS CRUSHED ROCK TO WITHIN 4" BELOW FINISHED GRADE. BOXES ARE TO BE SET NO LOWER THAN SIDEWALK OR FINISHED GRADE WHICHEVER IS HIGHER.

METERS SHALL BE PLACED AT LEAST 10' AWAY FROM TREES. ROOT BARRIERS SHALL BE NO CLOSER THAN 1 FOOT FROM BOX.

(G) 3 INCH SCHEDULE 40 WHITE PVC CASING UNDER PAVEMENT AND SIDEWALK.

(H) 12 GAUGE INSULATED LOCATOR WIRE. USE WIRE NUT (OR EQUAL) TO CONNECT TO MAIN LINE WIRE. RUN WIRE TO BUILDING.

(I) IRON PIPE SIZE HIGH DENSITY WEIGHT POLYETHYLENE (200 PSI), 1" COPPER PIPE TYPE K, OR PEXa FOR DIRECT BURIAL =>200PSI. FOR NEW CONSTRUCTION EXTEND TEN FEET INTO PROPERTY. CUSTOMER SIDE SHALL BE BRASS TO POLY.

(J) FOAM BLOCKING (12" MIN LENGTH) TO FILL THE ANNULAR GAP BETWEEN CASING PIPE AND SERVICE LINE.

(K) A.Y.MCDONALD 76101W 1" OR EQUAL CURB STOP VALVE. SHALL BE ACCESSIBLE FROM INSIDE OF METER BOX.

(L) 6" BRASS NIPPLE

(M) 3" SCH 40

MONROE WASHINGTON

DESCRIPTION

3/4" X 5/8" & 1" WATER SERVICE

DESIGNATION

501

SCALE

NOT TO SCALE

REVISED

FEB 1, 2024

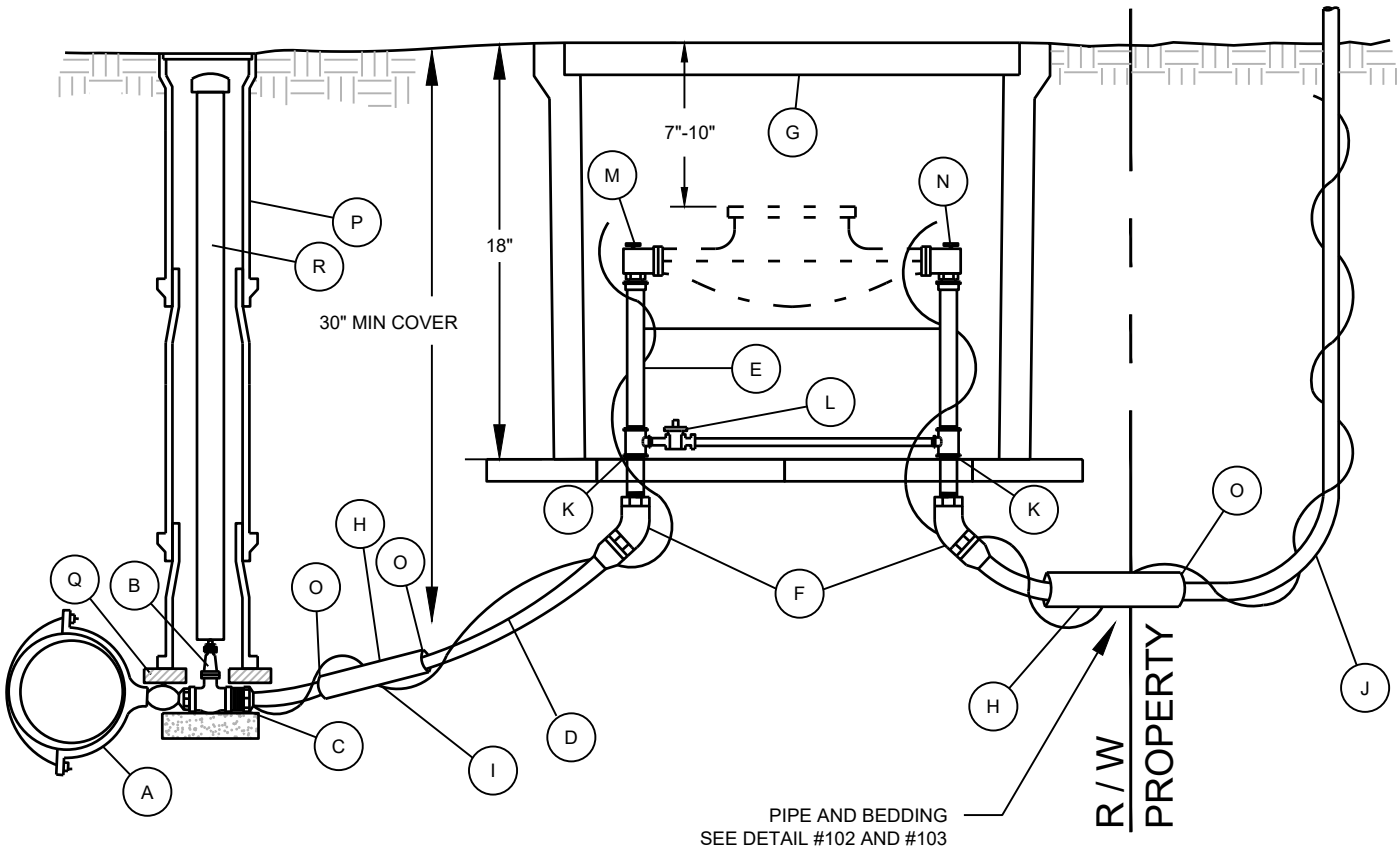

LEGEND

- (A) ROMAC, ROCKWELL, FORD, AND MUELLER WIDE BAND DOUBLE STRAPS SERVICE SADDLES WITH I.P. 2-INCH PIPE TAPER. SIZE TO MATCH MAIN.
- (B) 2" GATE VALVE.
- (C) A.Y. MCDONALD COMPRESSION FITTING X 2-INCH IRON PIPE FEMALE THREAD WITH STAINLESS INSERT. $\frac{1}{8}$ OR $\frac{1}{4}$ BEND IF NECESSARY OR APPROVED EQUAL.
- (D) 2-INCH MIN COPPER TUBE SIZE REHAU MUNICIPEX PEXa (200 PSI) OR COPPER TYPE K. 6" OF SAND BEDDING ABOVE AND BELOW PIPE FOR SERVICE LINE IS REQUIRED.
- (E) METER SETTER SHALL BE A. Y. MCDONALD SETTER, 2" METER SETTER SHALL BE 730B712WDFF 775 OR APPROVED EQUAL.
- (F) 2-INCH IRON PIPE THREAD X COPPER TUBE SIZE X 110 COMPRESSION COUPLING WITH STAINLESS STEEL INSERT. 2-INCH FIPT BEND AS NECESSARY. USE REDUCING BUSHING IF SETTER IS 1-1/2".
- (G) METER BOXES SHALL BE OLD CASTLE CARSON TRAFFIC RATED HW1730-18 BCF, BLK, 2MH SKU #17302520. LID SHALL BE OLD CASTLE FL36/02001579. TRAFFIC BOXES ARE TO BE SUPPORTED BY 4X8X16 SOLID CEMENT BLOCKS.

  METER BOXES ARE TO BE FIRMLY SUPPORTED WITH SETTER CENTERED IN BOX AND BACK FILLED WITH $\frac{5}{8}$" MINUS CRUSHED ROCK TO A MINIMUM OF 4" BELOW FINISHED GRADE. BOXES ARE TO BE SET NO LOWER THAN SIDEWALK OR FINISHED GRADE WHICH EVER IS HIGHER.

  METERS SHALL BE PLACED AT LEAST 10' AWAY FROM TREES. ROOT BARRIERS SHALL NOT BE WITHIN 1.5 FEET OF METER BOX.
- (H) 3-INCH SCHEDULE 40 WHITE PVC CASING UNDER PAVEMENT AND SIDEWALK.
- (I) 12 GAUGE INSULATED LOCATOR WIRE. USE WIRE NUT OR EQUAL TO CONNECT TO MAIN LINE SERVICE SADDLE. RUN WIRE TO BUILDING.
- (J) IRON PIPE SIZE HIGH DENSITY POLYETHYLENE (200 PSI) COPPER PIPE TYPE K OR PEXa. EXTEND 10' ONTO PROPERTY.
- (K) 2" NFPT
- (L) BYPASS BALL VALVE
- (M) ANGLE BALL VALVE
- (N) ANGLE DUAL CHECK VALVE
- (O) FOAM BLOCKING (12" MIN LENGTH) TO FILL THE ANNULAR GAP BETWEEN CASING PIPE AND SERVICE LINE.
- (P) VALVE BOX, SEE STANDARD 512
- (Q) INSTALL ETHO FOAM
- (R) 2" PVC SCHEDULE 40 PIPE WITH CAP LABELED "WATER SERVICE"

MONROE WASHINGTON

DESCRIPTION

1-1/2" & 2" WATER SERVICE

DESIGNATION

502

SCALE

NOT TO SCALE

REVISED

FEB 1, 2024

INTENTIONALLY
BLANK

MONROE WASHINGTON	DESCRIPTION RESERVED	DESIGNATION 503
SCALE NOT TO SCALE	REVISED FEB 1, 2024	

INTENTIONALLY
BLANK

MONROE WASHINGTON	DESCRIPTION RESERVED	DESIGNATION 504
	SCALE NOT TO SCALE	REVISED FEB 1, 2024

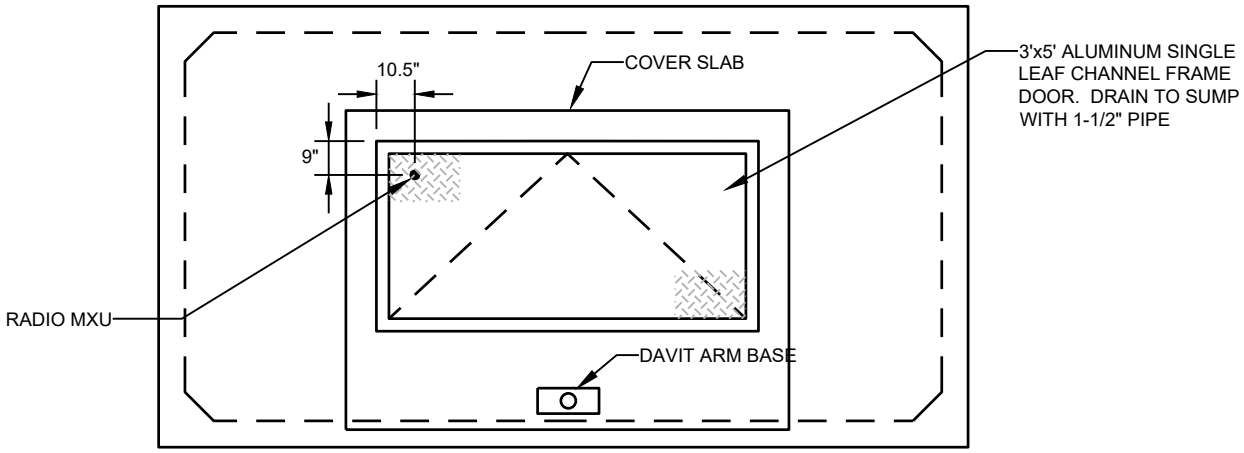

PLAN VIEW WITH COVER SLAB

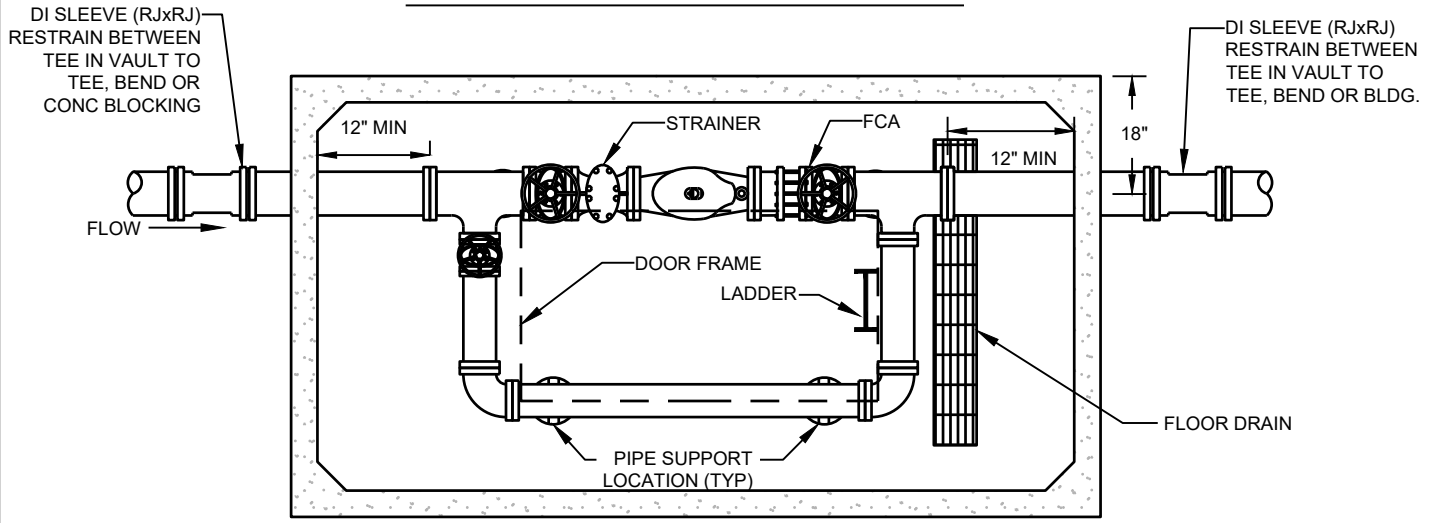

PLAN VIEW WITH EQUIPMENT

VAULT, FITTINGS AND PIPING SIZING REQUIREMENTS					
METER SIZE	BYPASS VALVE AND PIPING	BYPASS TEE (FLxFL)	MIN. INSIDE VAULT DIM.		
			LENGHT	WIDTH	HEIGHT
3"	3"	3"x3"	6 FT	6 FT	6 FT
4"	4"	4"x4"	10 FT	6 FT	6 FT
6"	4"	6"x4"	12 FT	6 FT	6 FT

NOTES:

1. VAULT ACCESS HATCH SHALL BE DRILLED FOR INSTALLATION OF RADIO MXU.
2. A GRAVITY VAULT DRAIN SHALL BE CONNECTED AS SHOWN ON DRAWING NUMBER 505-A.
3. PAINT ALL EXPOSED PIPING AND FITTINGS INSIDE VAULT, EXCEPT METER BODY. REFER TO STANDARD TEXT 5-4.19 FOR RECOMMENDED MANUFACTURERS.
4. CITY SHALL PROVIDE METER AND STRAINER.

MONROE WASHINGTON

DESCRIPTION

3", 4", 6" WATER SERVICE

DESIGNATION

505

SCALE

NOT TO SCALE

REVISED

FEB 1, 2024

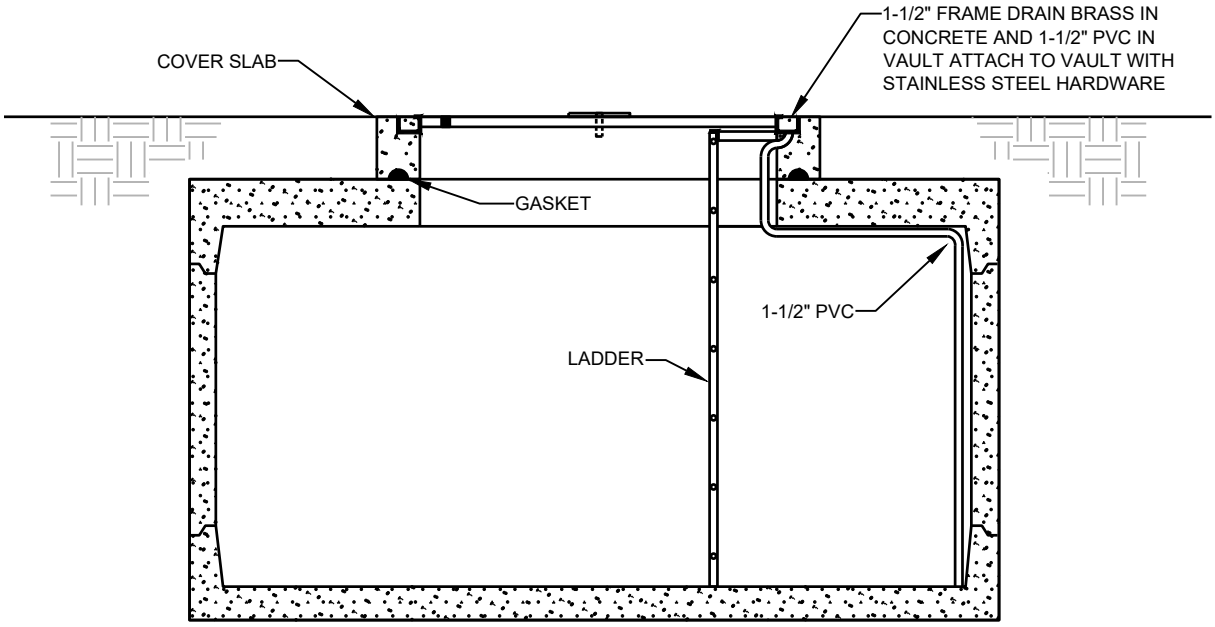

SECTION WITH COVER SLAB

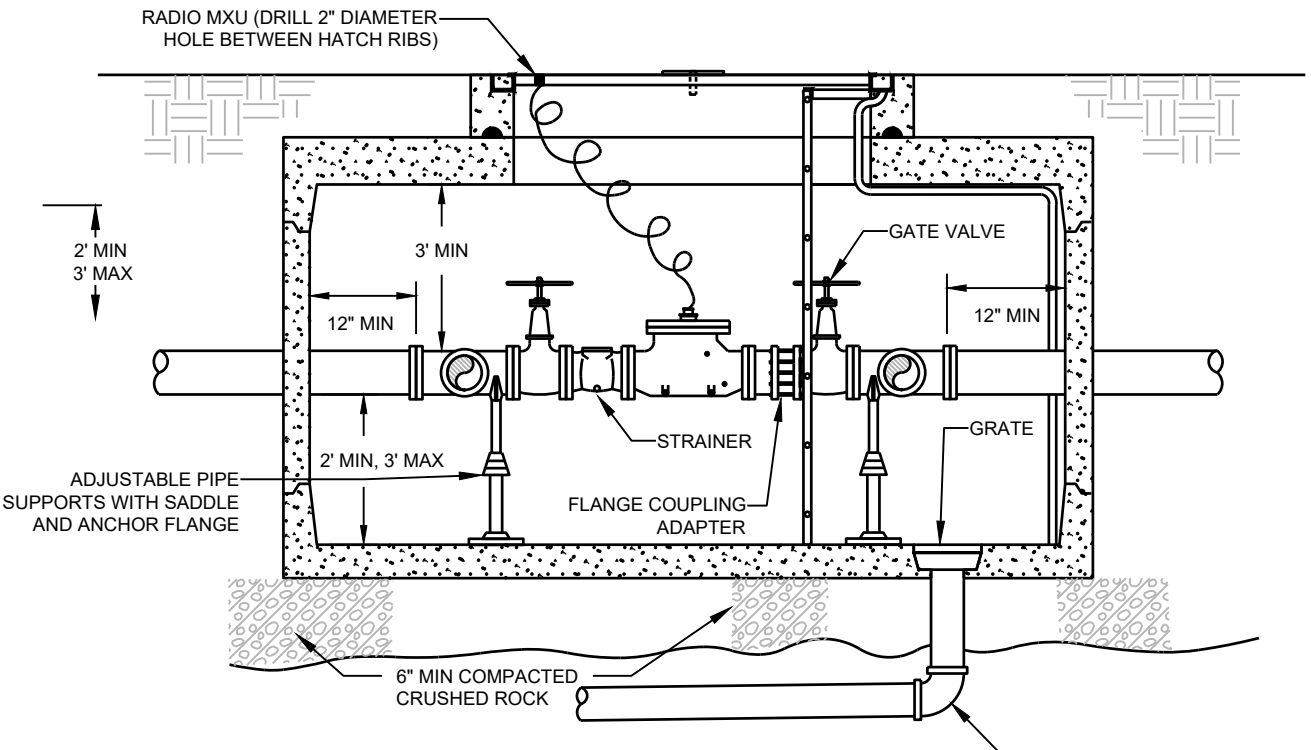

SECTION OF EQUIPMENT

NOTES:

1. SET COVER SLAB FLUSH WITH SIDEWALK OR CURB ELEVATION IF LOCATED IN LAWN AREA. SET COVER SLAB APPROXIMATELY 2" ABOVE FINISHED GRADE IF LOCATED IN LANDSCAPING AREA.
2. CITY OF MONROE TO SUPPLY BOTH METER AND STRAINER.

MONROE WASHINGTON	DESCRIPTION: 3", 4", 6" WATER METER SECTIONS	DESIGNATION: 505-A
	SCALE: NOT TO SCALE	REVISED: FEB 1, 2024

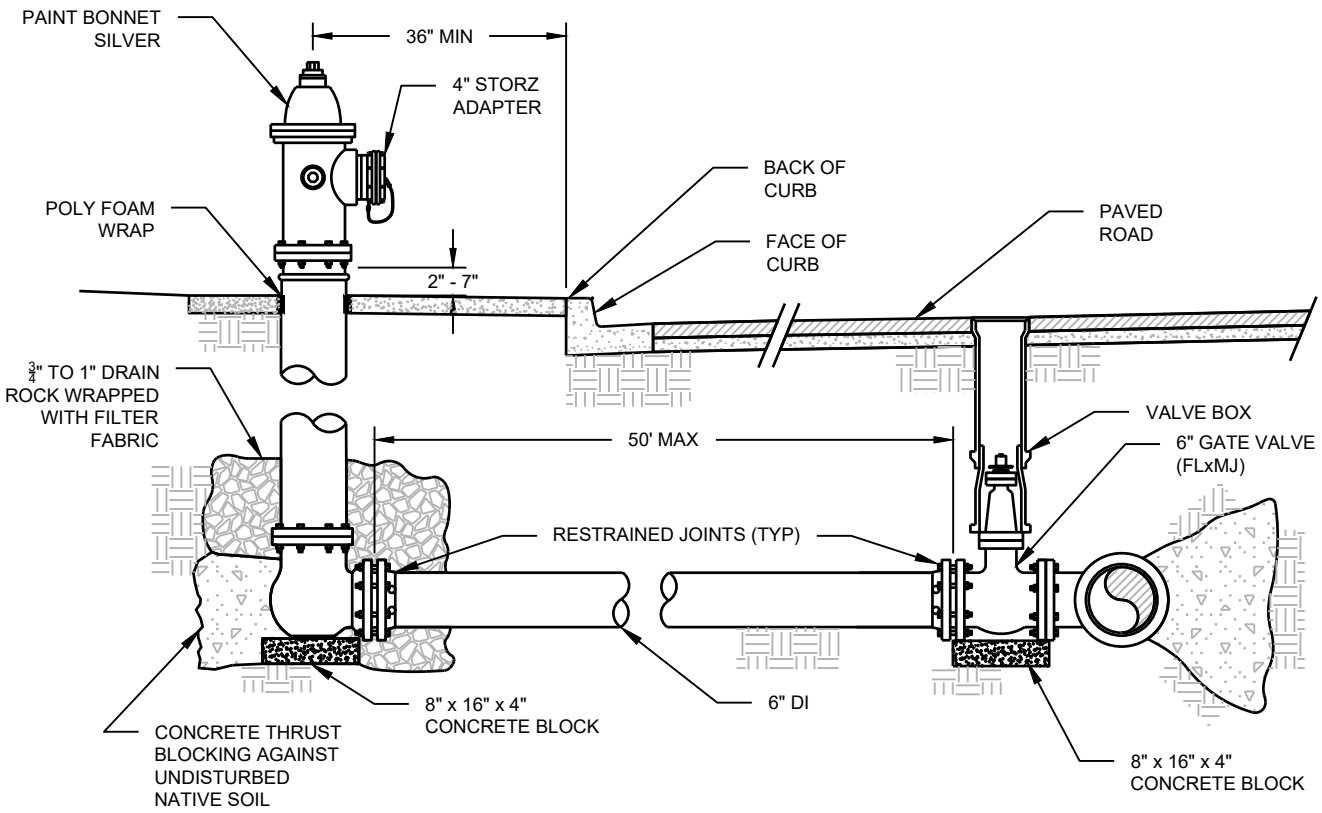

NOTES:

1. HYDRANTS AND ALL MATERIALS TO BE APWA OR AWWA APPROVED.
2. FIRE HYDRANT SHALL BE WATEROUS PACER OR EAST JORDAN 5CD250 NORTHWEST EDITION WITH 5-1/4" VALVE. TWO 2 1/2" NST HOSE PORTS, AND ONE NST 4" STORZ FITTING ON 4 1/2" STEAMER PORT FACING STREET, OR AS OTHERWISE DIRECTED. 1-1/4" OPERATING NUT AND CAP NUT FOR 2-1/2" PORTS. BREAK-OFF HYDRANT BASE FLANGE. WHERE MORE THAN ONE BELL JOINT IS USED A FIELD LOCK GASKET SHALL BE INSTALLED.
3. 4 " THICK 4' X 4' CONCRETE PAD WITH POLY WRAP FOAM AROUND HYDRANT BARREL. HYDRANT SHALL SIT IN THE CENTER OF THE PAD. CONCRETE SHALL BE CLASS 3000.
4. PROVIDE FOR VEHICULAR TRAFFIC PROTECTION WHEN NECESSARY PER STD. PLAN 507
5. BREAK-OFF FLANGE TO BE 2" - 7" ABOVE GROUND LEVEL.
6. 1/2 CY DRAIN ROCK WRAPPED WITH 6 MIL. POLYETHYLENE SHEETING.
7. FIRE HYDRANT BODY SHALL BE PAINTED WITH TWO COATS OF SAFETY RED INDUSTRIAL ENAMEL B54R38. FIRE HYDRANT CAPS AND BONNET SHALL BE PAINTED M10-ALUMINUM B65S14.
8. LANDSCAPING SHALL BE PLANTED AND MAINTAINED IN A MANNER SO AS TO PROVIDE 3' CLEARANCE FROM THE CIRCUMFERENCE OF THE HYDRANT.
9. THERE SHALL BE AT LEAST 1' OF CLEARANCE BETWEEN HYDRANT & SIDEWALK.
10. PAINT 30' FEET OF CURB SAFETY RED IN FRONT OF AND CENTERED ON HYDRANT.
11. VALVES INSTALLED IN UNPAVED AREAS SHALL HAVE A 2'X2' CONCRETE OR ASPHALT AREA INSTALLED AROUND THE VALVE BOX.

MONROE WASHINGTON

DESCRIPTION

FIRE HYDRANT ASSEMBLY

DESIGNATION

506

SCALE

NOT TO SCALE

REVISED

FEB 1, 2024

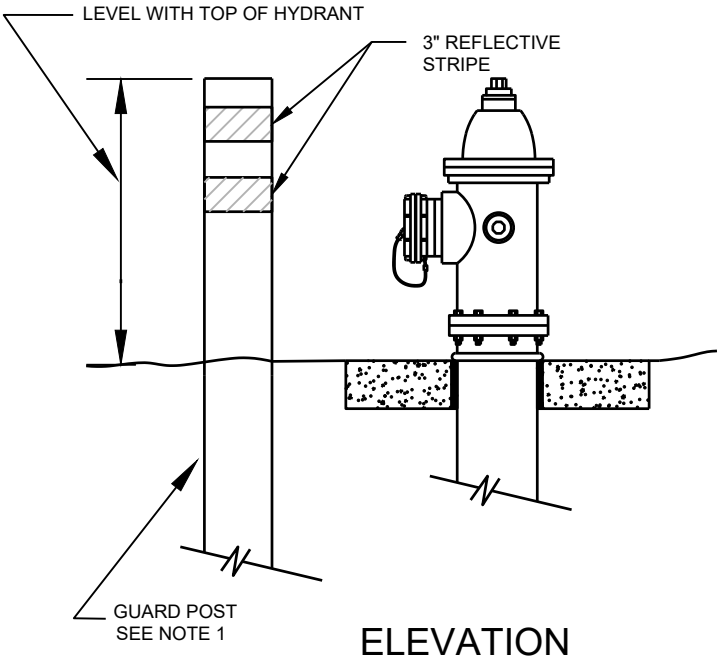

ELEVATION

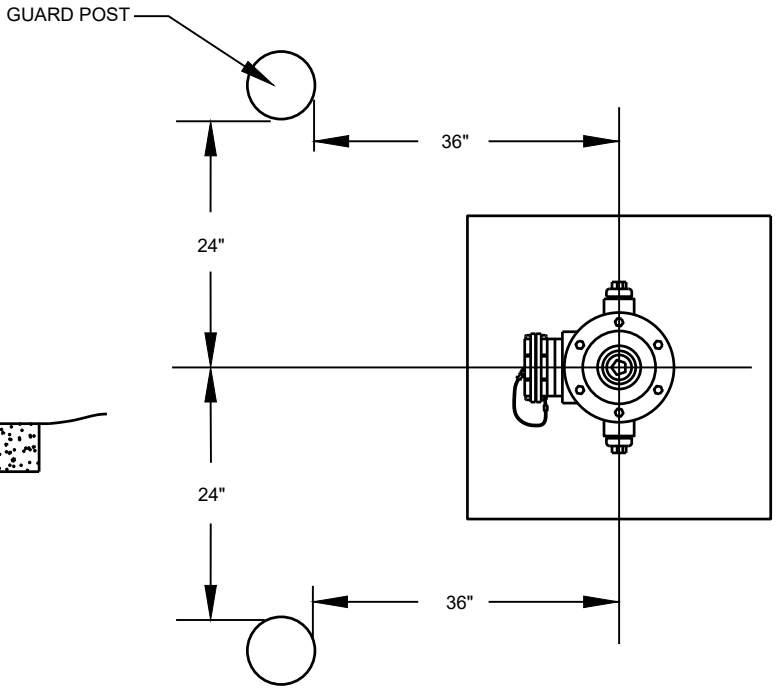

PLAN

FIRE HYDRANT GUARD POST

(SEE NOTES 1 AND 2)

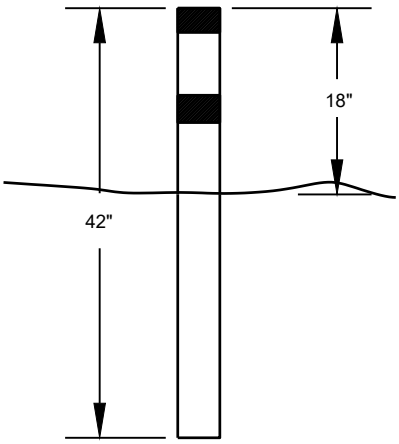

VALVE MARKER POST

INCLUDE CARSONITE MARKERS.
(SEE NOTES 3 AND 4)

NOTES:

1. GUARD POSTS SHALL BE 6' LONG 8" IN DIAMETER PRECAST CONCRETE OR 6' LONG 6" DIAMETER CONCRETE FILLED SCHEDULE 40 STEEL PIPE. PAINTED WITH TWO COATS OF SAFETY RED INDUSTRIAL ENAMEL B54R38.
2. VALVE MARKER POST SHALL BE 42" PORTABLE TRAFFIC DELINEATOR POST WITH TWO RELECTOR STRIPS. THEY SHALL BE FURNISHED NEW AND UNUSED AND BURIED 24" DEEP LEFT EXPOSED AS A MARKER POST. THE LETTER "V" AND THE DISTANCE TO THE VALVE SHALL BE STENCILED ON THE POST WITH 2" HIGH NUMERALS WITH BLACK ENAMEL PAINT.
3. VALVE MARKER POSTS SHALL BE INSTALLED FOR ALL VALVES LOCATED IN UNIMPROVED OR UNPAVED AREAS. VALVE MARKER POSTS SHALL BE SET AS DIRECTED BY THE PUBLIC WORKS INSPECTOR IN A SAFE AND REASONABLY CONSPICUOUS LOCATION.
4. VALVE MARKER POSTS ARE NOT REQUIRED FOR AUXILIARY HYDRANT VALVES.
5. GUARD POSTS SHALL HAVE TWO 3" INCH WIDE REFLECTIVE STRIPES 6" APART NEAR THE TOP OF THE POST.

MONROE WASHINGTON

DESCRIPTION
FH GUARD POST & VALVE MARKER

DESIGNATION
507

SCALE
NOT TO SCALE

REVISED
FEB 1, 2024

INTENTIONALLY
BLANK

MONROE WASHINGTON	DESCRIPTION RESERVED	DESIGNATION 508
SCALE NOT TO SCALE	REVISED FEB 1, 2024	

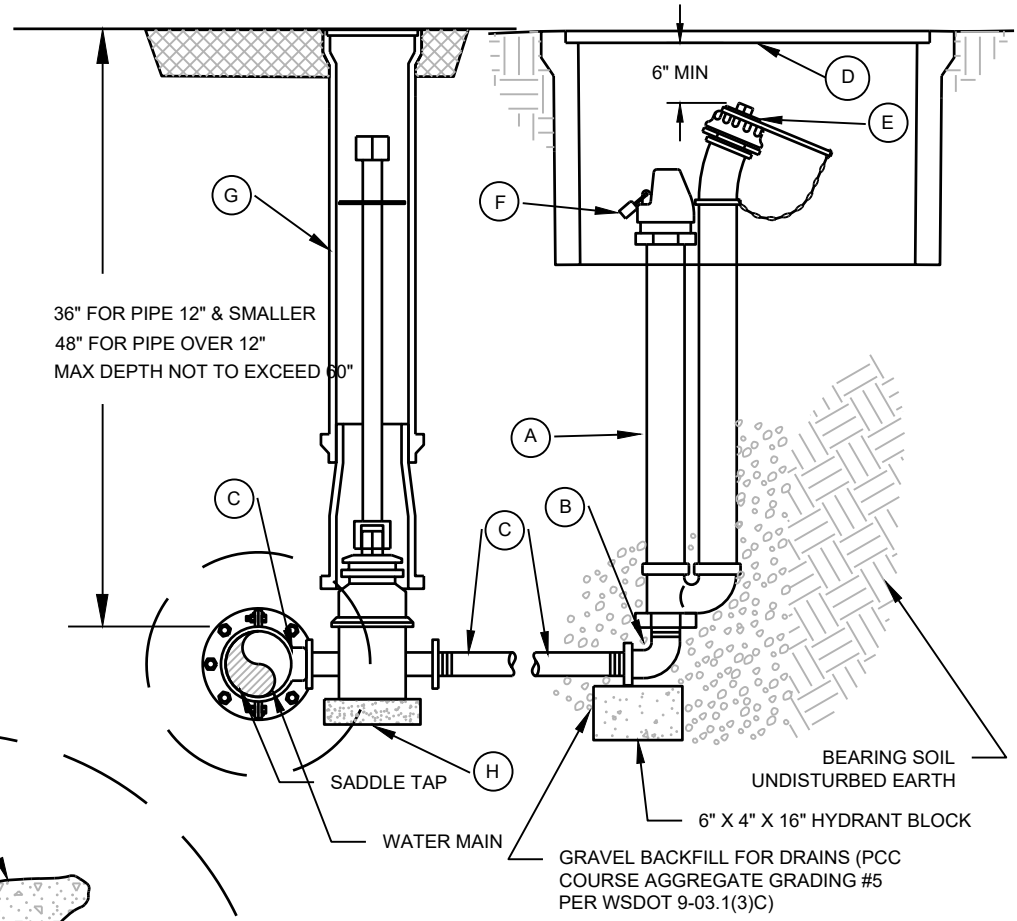

PROFILE VIEW

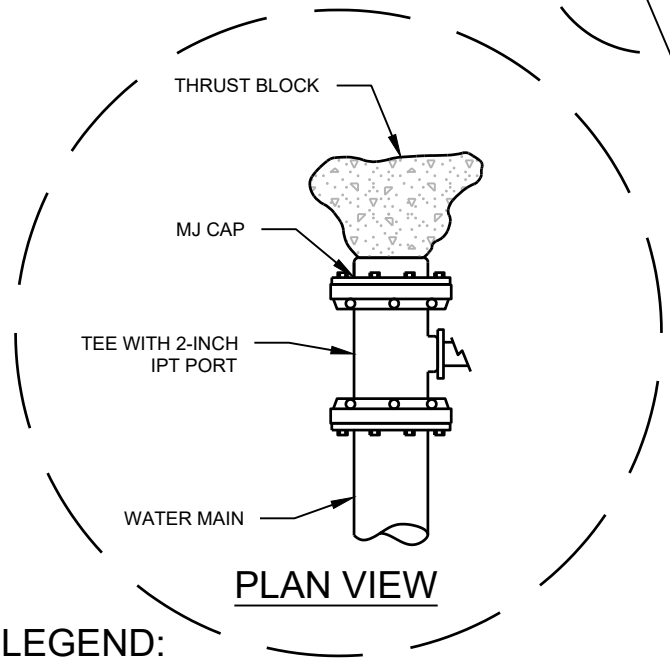

PLAN VIEW

LEGEND:

- (A) MAINGUARD 2" BLOW-OFF HYDRANT
- (B) 2" BRASS STREET "L"
- (C) 2" BRASS NIPPLE
- (D) METER BOX SHALL BE CARSON 1730 IN NON TRAFFIC AREAS AND OLD CASTLE HW 1730-18 BOX WITH SOLID CARSON DUCTILE IRON LID #65-45-12 WITHOUT READER WINDOW IN TRAFFIC AND SIDEWALK AREAS.
- (E) 2" CAP NATIONAL STANDARD THREAD
- (F) LOCK TO BE SUPPLIED BY CITY OF MONROE
- (G) VALVE BOX AND EXTENSION PER PER STD DWG 512
- (H) 2" SUPER HEAVY DUTY RESILIENT SEAT GATE VALVE (WATEROUS SERIES 500 OR M&H 3067 OR APPROVED EQUAL) SUPPORT VALVE WITH HYDRANT BLOCK

MONROE WASHINGTON

DESCRIPTION

BLOW-OFF ASSEMBLY

DESIGNATION

509

SCALE

NOT TO SCALE

REVISED

FEB 1, 2024

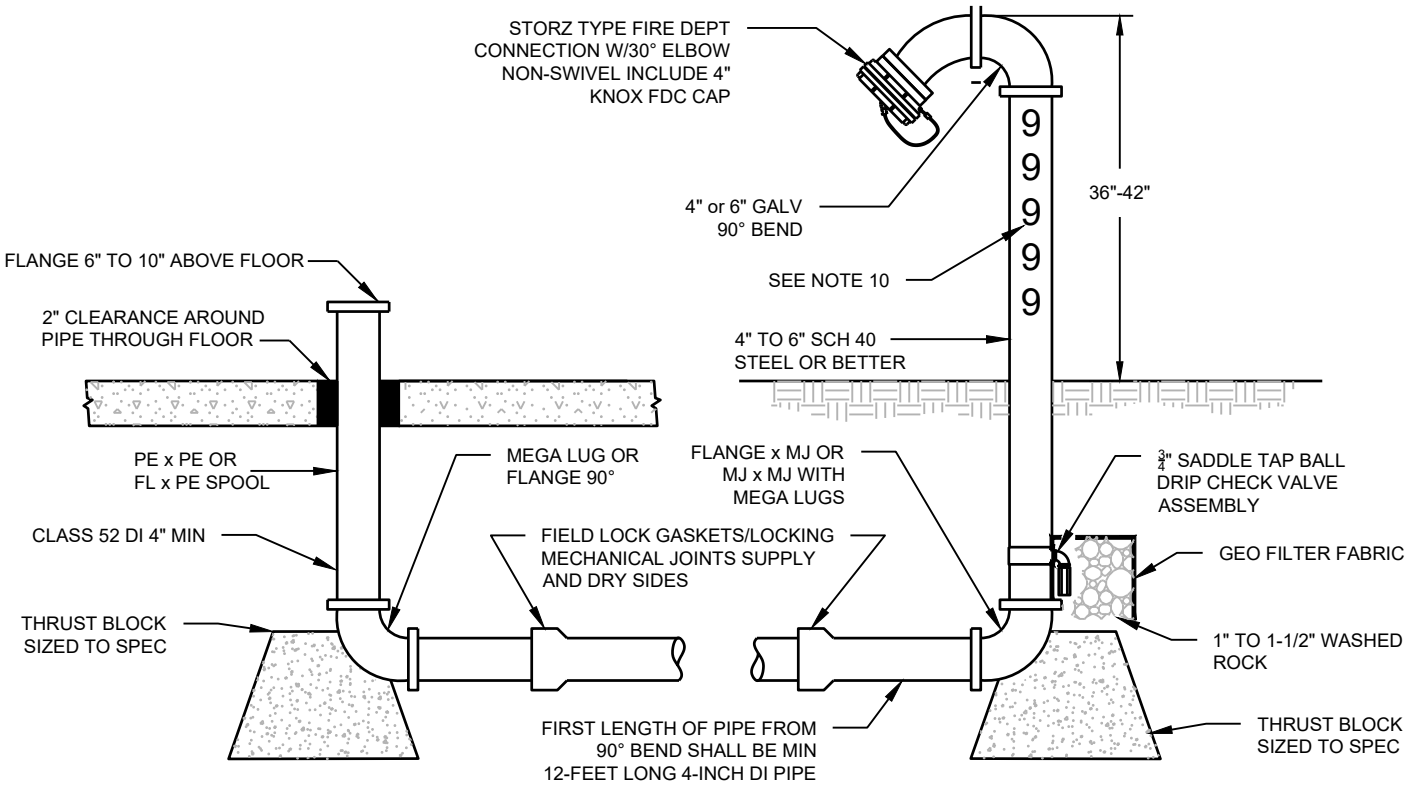

FLOOR FLANGE SUPPLY AND DRY SIDES

FIRE DEPARTMENT STAND PIPE CONNECTION WITH STORZ 30° ELBOW

NOTES:

1. SUPPLY AND DRY LINES TO BE RESTRAINED BY FIELD LOCK GASKETS ON BELL JOINTS. MEGA LUGS AND BLOCKING SHALL BE INSTALLED AT ALL CHANGES IN DIRECTION . PIPE TO BE CLASS 52 DI PIPE.
2. FIRE SYSTEMS SHALL BE DESIGNED BY A NICET LEVEL 3 DESIGNER/WASHINGTON LICENSED ENGINEER. THE INSTALLER OF THE FIRE PROTECTION SERVICE UNDERGROUND LINES SHALL BE LICENSED AND CERTIFIED AS REQUIRED BY THE OFFICE OF THE STATE FIRE MARSHAL.
3. ¾" SADDLE TAP BALL DRIP WITH 90° DOWNTURN IN A BED OF 1" TO 1-1/2" WASHED ROCK ENVELOPED IN GEO FILTER FABRIC. HEIGHT OF DRIP CHECK DETERMINED BY GROUND WATER ELEVATION.
4. FDC TO BE A 4" STORZ NON-SWIVEL 30° DOWN ELBOW WITH LOCKING FDC STORZ CAP (MODEL #5001 4" HARD ANODIZED ALUMINUM FROM WWW.KNOXBOX.COM). FDC STANDPIPE TO BE PAINTED WITH 2 COATS HIGH GLOSS RUST-O-LEUM FIRE DEPT RED BARREL NO. 1210. DO NOT PAINT 30° ELBOW.
5. CENTER OF FIRE HYDRANT TO CENTER OF FDC TO BE NO MORE THAN 50' AND NO LESS THAN 4' APART.
6. PRESSURE TESTING PER NFPA 24 STANDARDS (200 PSI FOR 2 HOURS WITH NO LOSS.)
7. FLUSH PER NFPA 24 STANDARD. FULL FLOWS WITH BURLAP BAGS FOR DEBRIS INSPECTION.
8. SOURCE WATER FOR FLOW TESTING TO BE PROTECTED BY MEANS OF A TEMPORARY DCVA THAT HAS BEEN VERIFIED TESTED BY A BACKFLOW ASSEMBLY TESTER. DCVA'S ARE TO BE A MINIMUM OF 4" DIAMETER AND SIZED TO ACHIEVE PROPER FLOW FOR FLUSH AFTER HYDRO TESTING HAS BEEN ACHIEVED. FLOW CALCULATIONS TO BE ESTABLISHED BY A NICET LEVEL 3 SYSTEM DESIGNER.
9. VERIFICATION OF FLOW RATE AND TESTING BY CITY OF MONROE ONLY. CITY OF MONROE TO OPERATE WATER SYSTEM VALVES.
10. INSTALL SERVICE ADDRESS TO FDC STAND PIPE. NUMBERS SHALL BE BLACK NUMBERS ON RED STAND PIPE. NUMBERS SHALL BE VINYL OR PAINT. AT A MINIMUM NUMBERS SHALL BE 4" TALL WITH ¾" STROKE WIDTH. NUMBERS SHALL BE INSTALLED SO AS TO BE VISIBLE FROM THE PARKING LOT OR STREET.
11. FIRE SUPPLY LINES CONNECTING TO CITY WATER MAINS SHALL CONNECT WITH A MINIMUM 4-INCH TEE AND 4-INCH GATE VALVE. GATE VALVE SHALL BE SUPPORTED BY A 8X8X16" CONCRETE BLOCK. FIRE LINE GATE VALVES SHALL HAVE A 2-INCH SCH 40 PIPE WITH CAP PAINTED RED AND LABELED "FIRE LINE VALVE". FIRE LINE VALVE MARKER SHALL EXTEND TO 6-INCHES BELOW VALVE BOX LID.
12. PIPE SIZE REDUCTIONS SHALL BE PER APPROVED FIRE LINE PLAN. PIPE SIZE REDUCTIONS SHALL BE ACCOMPLISHED WITH A 4-INCH CAP AND APPROPRIATE SIZED TAP PER NICET APPROVED DESIGN. ALL PIPE AND FITTINGS SHALL BE RESTRAINED JOINTS.

MONROE WASHINGTON

DESCRIPTION

4" FDC FOR SPRINKLER AND STANDPIPE

DESIGNATION

510

SCALE

NOT TO SCALE

REVISED

FEB 1, 2024

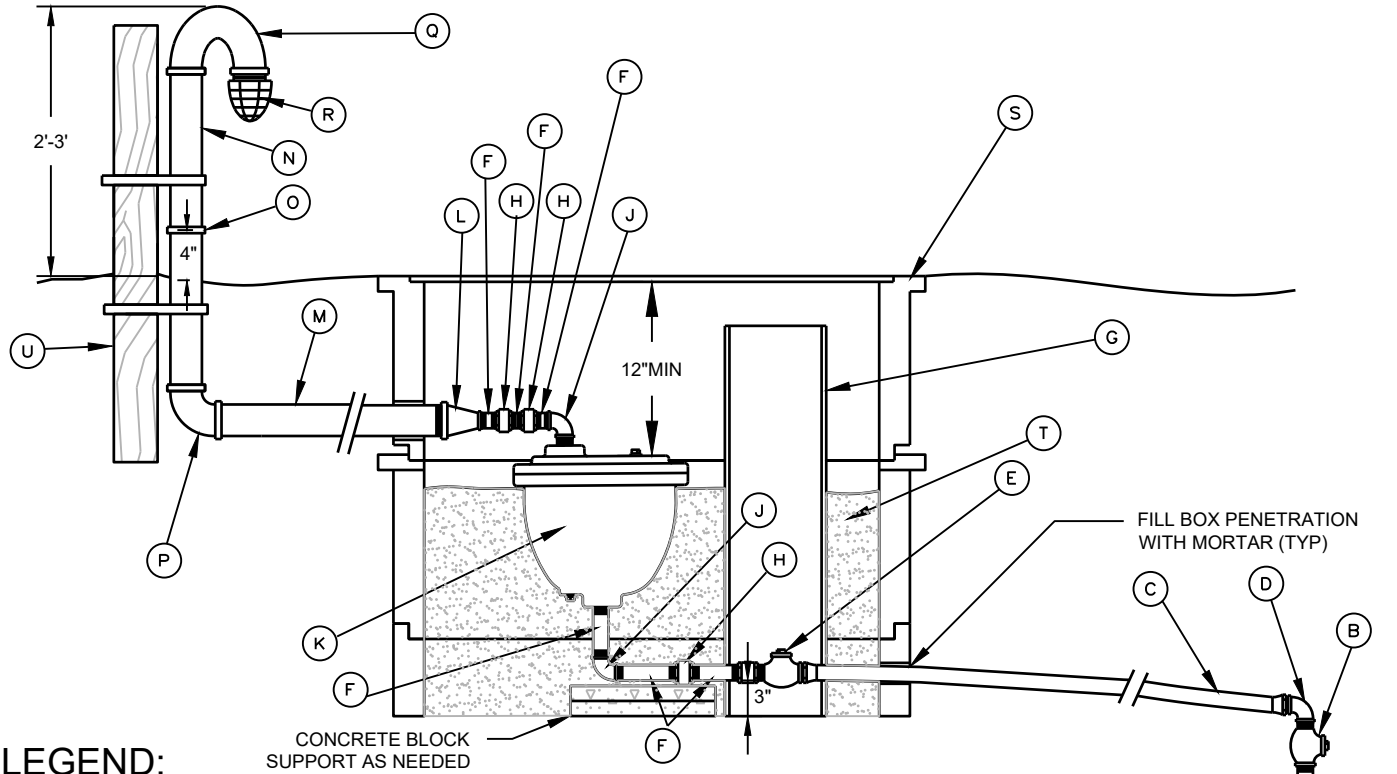

LEGEND:

- (A) CL 52 DUCTILE IRON PIPE
- (B) MUELLER B20013 IPS BALL CORP STOP - 300 PSI
- (C) 1" COPPER TUBE SIZE REHAU MUNICIPEX (200 PSI) OR APPROVED EQUAL
- (D) 1" MUELLER BRASS ANGLE COUPLING
- (E) 1" MUELLER BRASS CURB STOP
- (F) 1" MUELLER BRASS NIPPLE
- (G) 6" PVC PIPE WITH NON GASKETED CAP
- (H) 1" MUELLER BRASS UNION
- (J) 1" BRASS 90° ELL
- (K) 1" COMBINATION AIR AND VACUUM RELIEF VALVE SHALL BE CRISPIN CRVL-10 OR 20 OR APPROVED EQUAL
- (L) 2"x1" GALVANIZED REDUCER
- (M) 2" TYPE K COPER, REHAU MUNICIPEX, OR BRASS
- (N) 2" SCH 40 PVC WITH 2" PVC MIP X SLIP ADAPTOR
- (O) TRANSITION TO PVC BREAKAWAY POINT
- (P) 2" GALVANIZED MIP 90° ELL 2" GALVANIZED STREET ELBOW WITH 3/8" DRILLED DRAIN HOLE
- (Q) 2" PVC SCH 40 RETURN BEND
- (R) GALV BEEHIVE STRAINER GREENBURG P-24-08, FOR 2" PIPE OR EQUAL
- (S) UTILITY BOX CARSON 1730-18"
- (T) BACKFILL WITH CEDAR CHIPS TO BONNET.
- (U) 4" x 6" x 6' PRESSURE TREATED POST, ATTACH PIPE TO POST WITH STAINLESS STEEL STRAPS

NOTES:

1. AIR-VAC UNIT AND BOX TO BE INSTALLED IN NON-TRAFFIC AREA.
2. USE MUELLER DOUBLE STRAP SERVICE CLAMP OR APPROVED EQUAL ON ALL MAINS GREATER THAN 8" IN DIAMETER.
3. ALL PIPE FITTINGS BETWEEN MAIN AND UNION. AFTER AIR/VACUUM RELIEF SHALL BE BRASS.
4. INSTALLATIONS FOR OTHER SIZE AIR/VACUUM RELIEF VALVES SHALL BE INDIVIDUALLY DESIGNED AND WILL REQUIRE APPROVAL BY THE UTILITIES DIVISION.
5. PAINT METER BOX LID AND RISER ASSEMBLY (2) COATS GLOSS TRUE BLUE ENAMEL. SUBMIT BLUE PAINT SAMPLE TO CITY ENGINEER FOR APPROVAL PRIOR TO INSTALLATION. STENCIL RISER ASSEMBLY WITH "AV" AND SIZE OF AIR/VAC ASSEMBLY ON SIDE FACING ROADWAY IN 2" BLACK LETTERS.
6. AIR/VAC RELEASE VALVE ASSEMBLY SHALL BE INSTALLED AT HIGH POINT ON LINE. IF HIGH POINT FALLS IN LOCATION WHERE ASSEMBLY CANNOT BE INSTALLED ADJUST PIPE DEPTH TO CREATE A NEW HIGH POINT.

MONROE WASHINGTON

DESCRIPTION

1" AIR AND VACUUM RELEASE VALVE

DESIGNATION

511

SCALE

NOT TO SCALE

REVISED

FEB 1, 2024

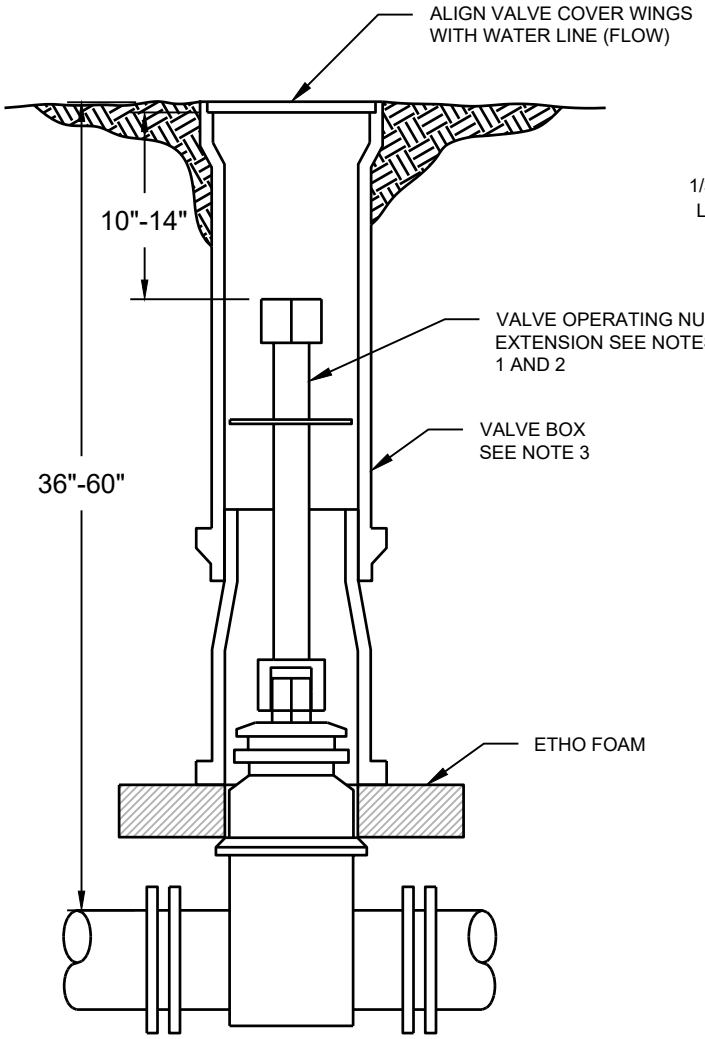

VALVE BOX AND EXTENSION

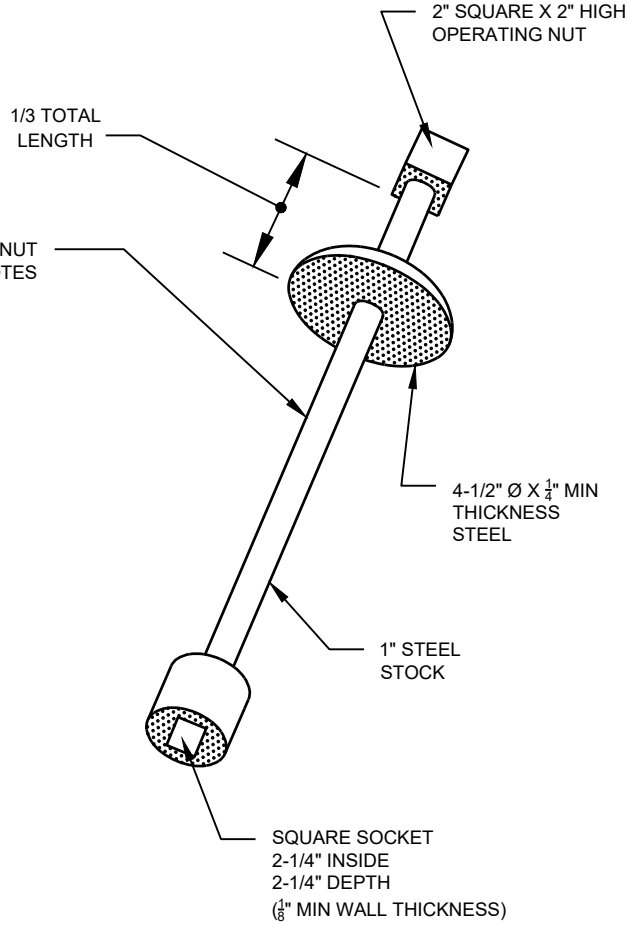

VALVE OPERATING NUT EXTENSION

NOTES:

1. VALVE OPERATING NUT EXTENSIONS ARE REQUIRED WHEN THE VALVE NUT IS MORE THAN THREE (3) FEET BELOW FINISHED GRADE. EXTENSIONS ARE TO BE A MINIMUM OF ONE (1) FOOT LONG. ONLY ONE EXTENSION WILL BE ALLOWED PER VALVE.
2. ALL VALVE OPERATING NUT EXTENSIONS ARE TO BE MADE OF STEEL, SIZED AS NOTED AND PAINTED WITH TWO (2) COATS OF METAL RUST RESISTANT PAINT.
3. VALVE BOXES SHALL BE CAST IRON, TWO PIECE UNITS, DESIGNED WITH LUGS ON COVER, EQUAL TO EJ VALVE BOX (85557016U/85557010) AND VALVE BOX COVER (06800001U).
4. ALL VALVES IN UNPAVED AREAS SHALL HAVE A 2'X2'X4" THICK CONCRETE OR ASPHALT PAD AROUND COVER. PAD SUBGRADE SHALL BE COMPACTED TO 95% DENSITY.

MONROE WASHINGTON

DESCRIPTION
VALVE BOX & EXTENSION

DESIGNATION
512

SCALE
NOT TO SCALE

REVISED
FEB 1, 2024

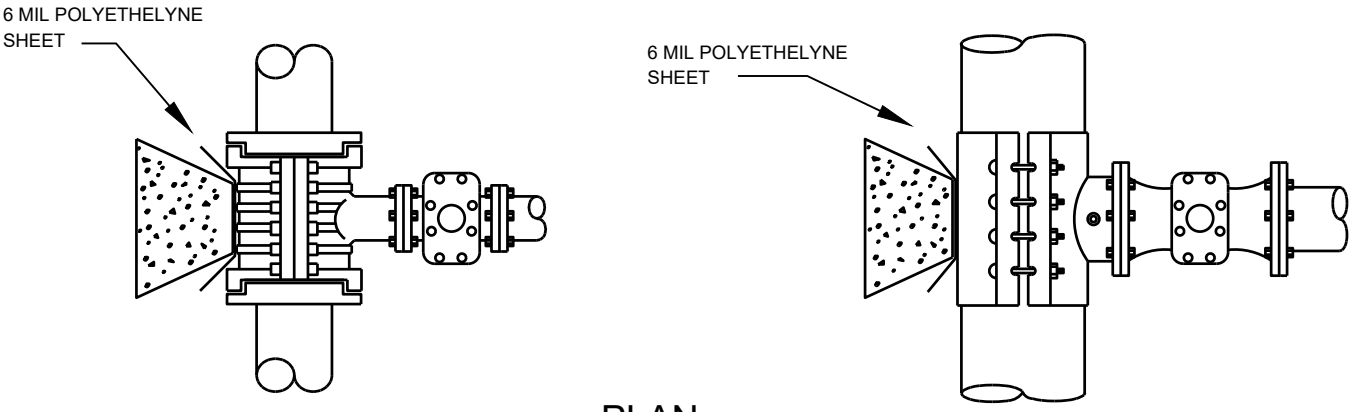

PLAN

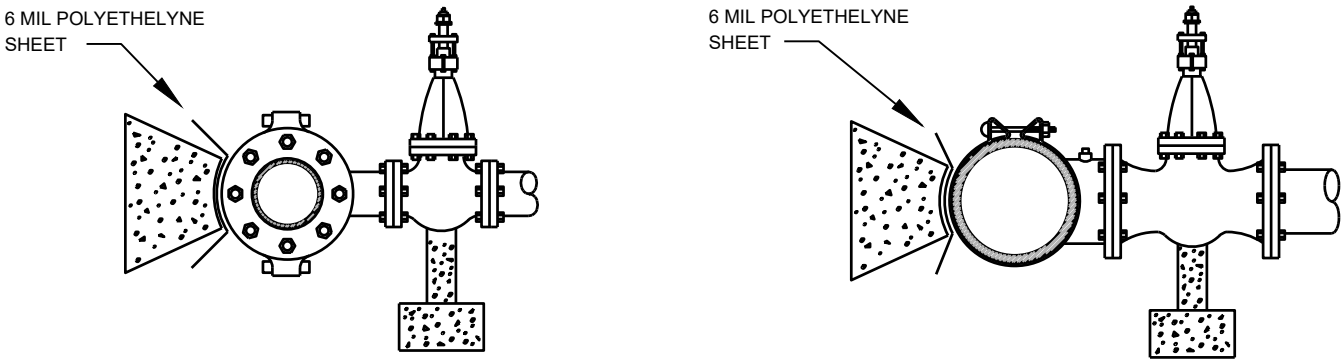

ELEVATION

STAINLESS STEEL TAPPING TEES

NOTES:

1. STAINLESS STEEL TAPPING TEES SHALL HAVE FULL CIRCLE SEAL.
2. ALL TEES AND VALVES TO BE WATER TESTED BEFORE TAP.

MONROE WASHINGTON	DESCRIPTION: TAPPING TEES	DESIGNATION: 513
	SCALE: NOT TO SCALE	REVISED: FEB 1, 2024

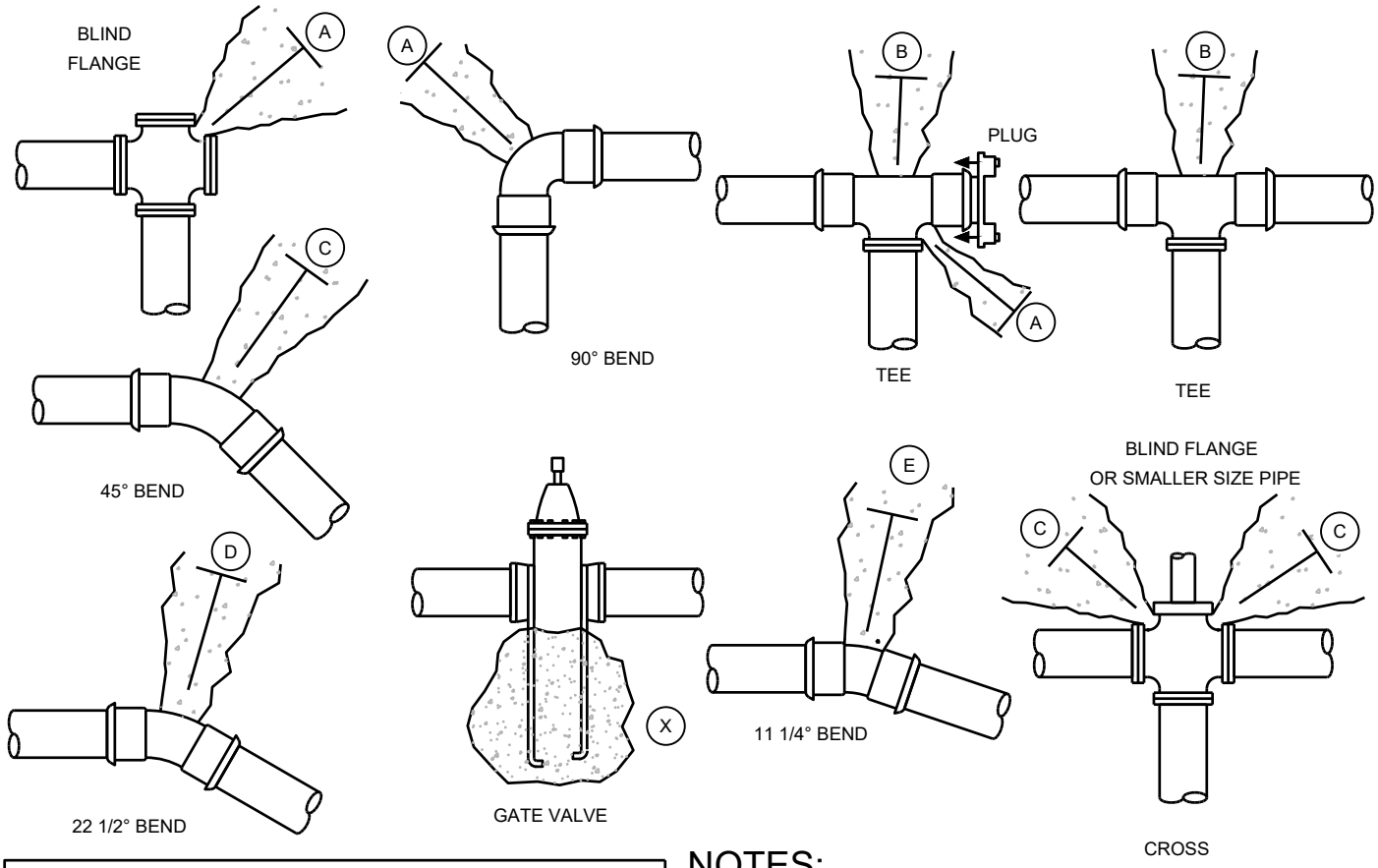

THRUST BLOCK - TABLE

MIN. BEARING AREA AGAINST UNDISTURBED SOIL

SQUARE FEET

PIPE SIZE	(A) FT 2	(B) FT 2	(C) FT 2	(D) FT 2	(E) FT 2	(X) FT 2
4"	3	1	1	1	1	NONE
6"	4	4	2	1	1	NONE
8"	7	6	4	2	1	4
10"	11	10	6	3	2	6
12"	16	14	9	5	3	9
14"	22	19	12	6	3	12
16"	29	25	16	8	4	16
18"	36	31	20	10	5	20
20"	45	39	24	13	6	24
22"	54	47	29	15	8	29
24"	64	56	35	18	9	35
28"	87	76	48	24	12	48
30"	101	87	55	28	14	55
36"	175	125	78	40	20	78
42"	197	171	107	55	27	107
48"	257	223	140	71	36	140

NOTES:

1. BEARING AREA OF CONCRETE THRUST-BLOCK BASED ON 200 PSI PRESSURE AND SAFE SOIL-BEARING LOAD OF 2,000 POUNDS PER SQUARE FOOT.
2. AREAS MUST BE ADJUSTED FOR OTHER PIPE SIZES, PRESSURES, AND SOIL CONDITIONS.
3. CONCRETE BLOCKING (CLASS 3000) SHALL BE CAST IN PLACE AND HAVE A MINIMUM OF 1/4 SQUARE FOOT BEARING AGAINST THE FITTING.
4. BLOCK SHALL BEAR AGAINST FITTINGS ONLY AND SHALL BE CLEAR OF JOINTS TO PERMIT TAKING UP OR DISMANTLING OF JOINT.
5. CONTRACTOR SHALL INSTALL BLOCKING ADEQUATE TO WITHSTAND FULL TEST PRESSURE UNDER ALL CONDITIONS OF SERVICE.
6. MINIMUM ROD DIAMETER SHALL BE 3/4" ASTM A-307 WITH 36KSI YIELD STRENGTH.
7. SHEET PLASTIC OVER NUTS AND BOLTS PRIOR TO CONCRETE POUR.

MONROE WASHINGTON

DESCRIPTION

HORIZONTAL THRUST BLOCKS

DESIGNATION

514

SCALE

NOT TO SCALE

REVISED

FEB 1, 2024

VERTICAL BLOCKING

PIPE SIZE	VB	CY	A	D	L
4"	11-1/4°	0.25	2.0'	3/4"	1.5'
	22-1/2°	0.50	2.2'	3/4"	2.0'
	45°	1.00	2.8'	3/4"	
6"	11-1/4°	0.50	2.2'	3/4"	2.0'
	22-1/2°	1.00	2.9'	3/4"	
	45°	2.00	3.7'	3/4"	
8"	11-1/4°	1.00	2.5'	3/4"	2.0'
	22-1/2°	2.00	3.6'	3/4"	
	45°	3.50	4.5'	3/4"	2.5'
12"	11-1/4°	2.00	3.2'	7/8"	2.0'
	22-1/2°	4.00	4.5'	7/8"	3.0'
	45°	7.50	5.8'	1 1/8"	
16"	11-1/4°	3.75	4.1'	7/8"	3.0'
	22-1/2°	7.50	5.7'	1 1/8"	4.0'
	45°	13.50	7.1'	1 1/4"	
18"	11-1/4°	4.75	4.5'	7/8"	3.0'
	22-1/2°	9.25	6.1'	1 1/8"	4.0'
	45°	17.00	7.7'	1 1/4"	4.5'
20"	11-1/4°	5.75	4.5'	7/8"	3.0'
	22-1/2°	11.50	6.1'	1 1/4"	4.0'
	45°	20.75	8.2'	1 3/8"	4.5'
24"	11-1/4°	8.50	5.0'	1"	3.5'
	22-1/2°	16.25	6.8'	1 3/8"	4.5'
	45°	30.00	9.4'	1 5/8"	5.5'

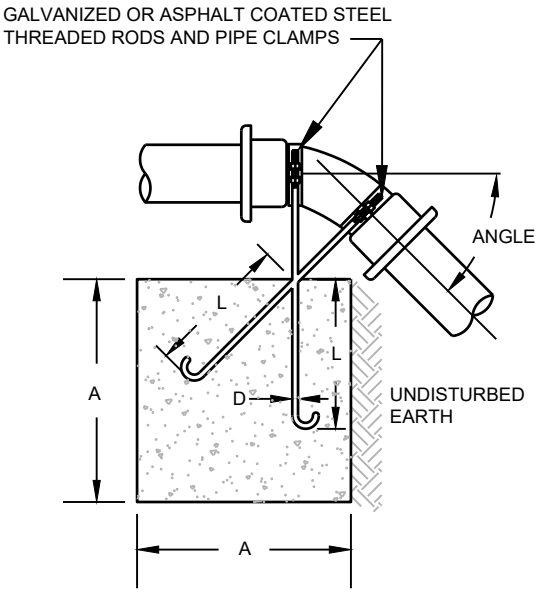

BLOCK SIZED PER THRUST RESTRAINT

$$Vg = \frac{Sf\ PA\ \sin\Theta}{Wm}$$

Vg = Volume of the Thrust Block
Sf = Safety factor, used 1.5
P = Design pressure, used 250 psi
A = Pressure cross section area, varies with pipe size
Θ = Angle of fitting, varies with fitting type
Wm = Density of block material, used 150 #/cf

MONROE WASHINGTON

DESCRIPTION
BLOCKING AND VERT. BLOCKING DETAILS

DESIGNATION
515

SCALE
NOT TO SCALE

REVISED
FEB 1, 2024

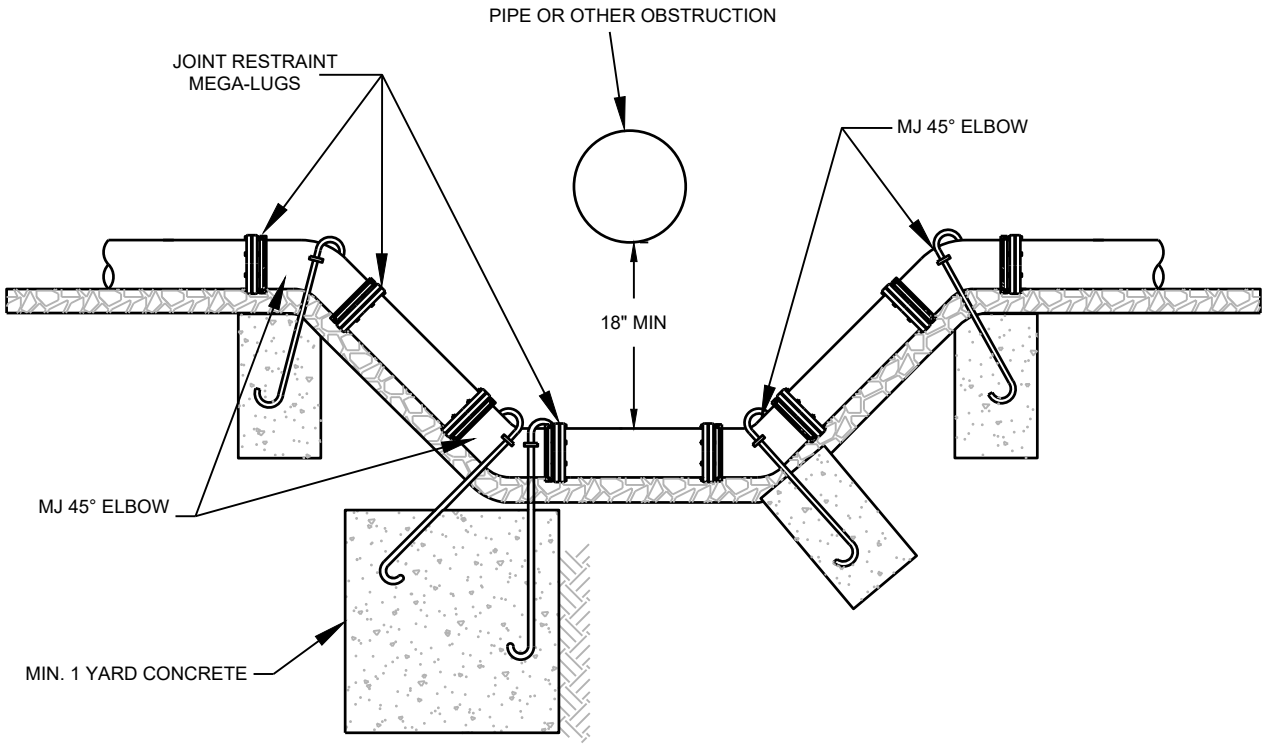

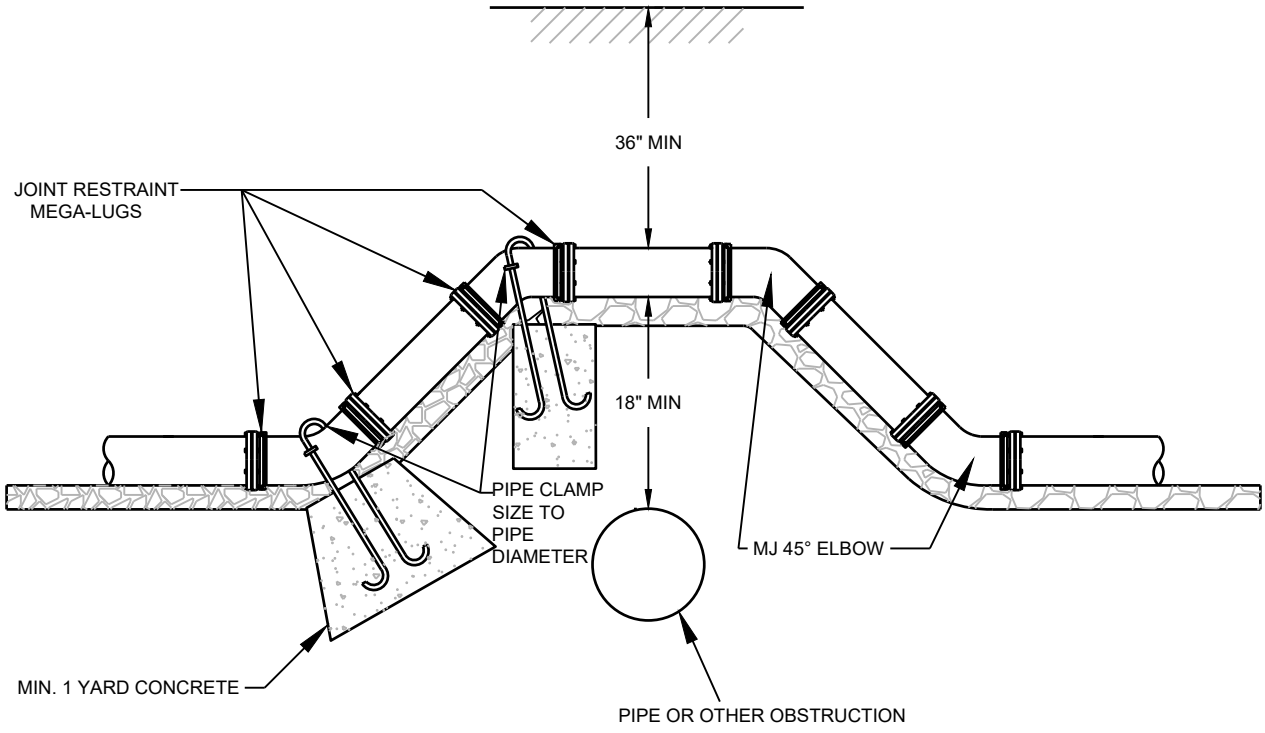

MONROE WASHINGTON

DESCRIPTION

BLOCKING AND VERT. BLOCKING DETAILS

DESIGNATION

516

SCALE

NOT TO SCALE

REVISED

FEB 1, 2024

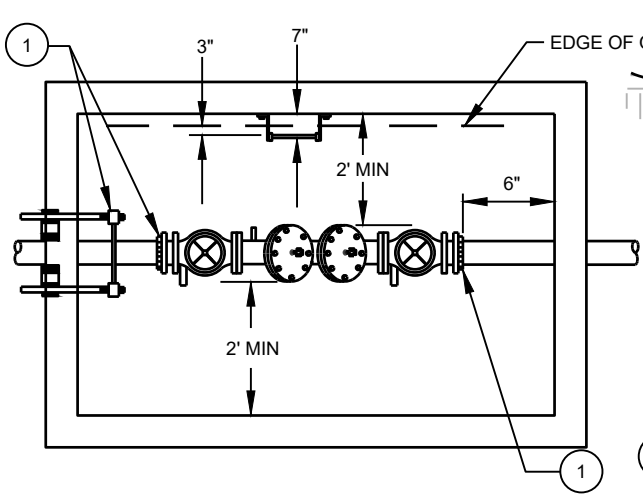

PLAN

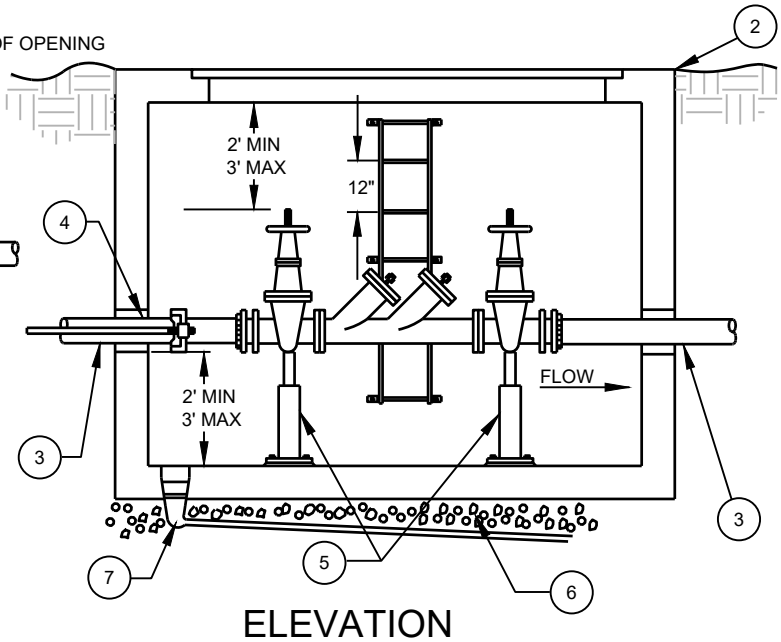

ELEVATION

LEGEND:

1. UNI-FLANGE WITH SET SCREWS OR MJ x FL ADAPTOR WITH MEGALUG OR GALVANIZED SHACKLE TO MAIN WITH 2-3/4" RODS, OR MJ RETAINER GLANDS.
2. PRECAST CONCRETE VAULT WITH STEEL ACCESS HATCH (AS MANUFACTURED BY UTILITY VAULT CO OR AN APPROVED EQUAL). PROVIDE OSHA APPROVED HOT DIPPED GALVANIZED STEEL LADDER. INSTALL LADDER IN SUCH AWAY AS TO PROVIDE VAULT ACCESS THAT DOES NOT INTERFERE WITH INSTALLED EQUIPMENT OR MAINTENANCE THEREOF.
3. DUCTILE IRON PIPE (SIZED AS REQUIRED) CLASS 52.
4. WATER TIGHT GROUT SHALL BE USED IN ALL VAULT PENETRATIONS.
5. 2 - GALVANIZED ADJUSTABLE PIPE SUPPORTS FOR 2 1/2" DIM AND LARGER PIPE.
6. GRAVEL FOUNDATION AS REQUIRED.
7. DRAIN, SLOPE TO DAYLIGHT, TO APPROVED DRAIN OR ACTIVE SUMP PUMP.

NOTES:

1. A PLUMBING PERMIT IS REQUIRED. OBTAIN PERMIT FROM CITY OF MONROE.
2. THOROUGHLY FLUSH LINES PRIOR TO INSTALLATION OF BACKFLOW PREVENTER.
3. DEVICE MUST BE PROTECTED FROM FREEZING CONDITIONS.
4. THE BACKFLOW ASSEMBLY SHALL BE A MODEL APPROVED BY THE STATE.
5. ALL TEST COCKS ARE REQUIRED TO BE CAPPED.
6. DEVICE MUST BE TESTED AFTER INSTALLATION AND ANNUALLY THEREAFTER BY A WASHINGTON STATE CERTIFIED BACKFLOW TESTER. TEST RESULTS SHALL BE SENT TO THE CITY OF MONROE PUBLIC WORKS DEPARTMENT.
7. TEE AND GATE VALVE REQUIRED ON MAIN.
8. MAXIMUM HEIGHT OF ASSEMBLY IS FIVE FEET.
9. MINIMUM INSIDE VAULT HEIGHT IS 78" FOR 2.5" SERVICE AND LARGER.
10. ALL DIMENSIONS ARE MINIMUM CLEARANCE REQUIREMENTS.

MONROE WASHINGTON

DESCRIPTION

DCVA 2.5" AND LARGER

DESIGNATION

517L

SCALE

NOT TO SCALE

REVISED

FEB 1, 2024

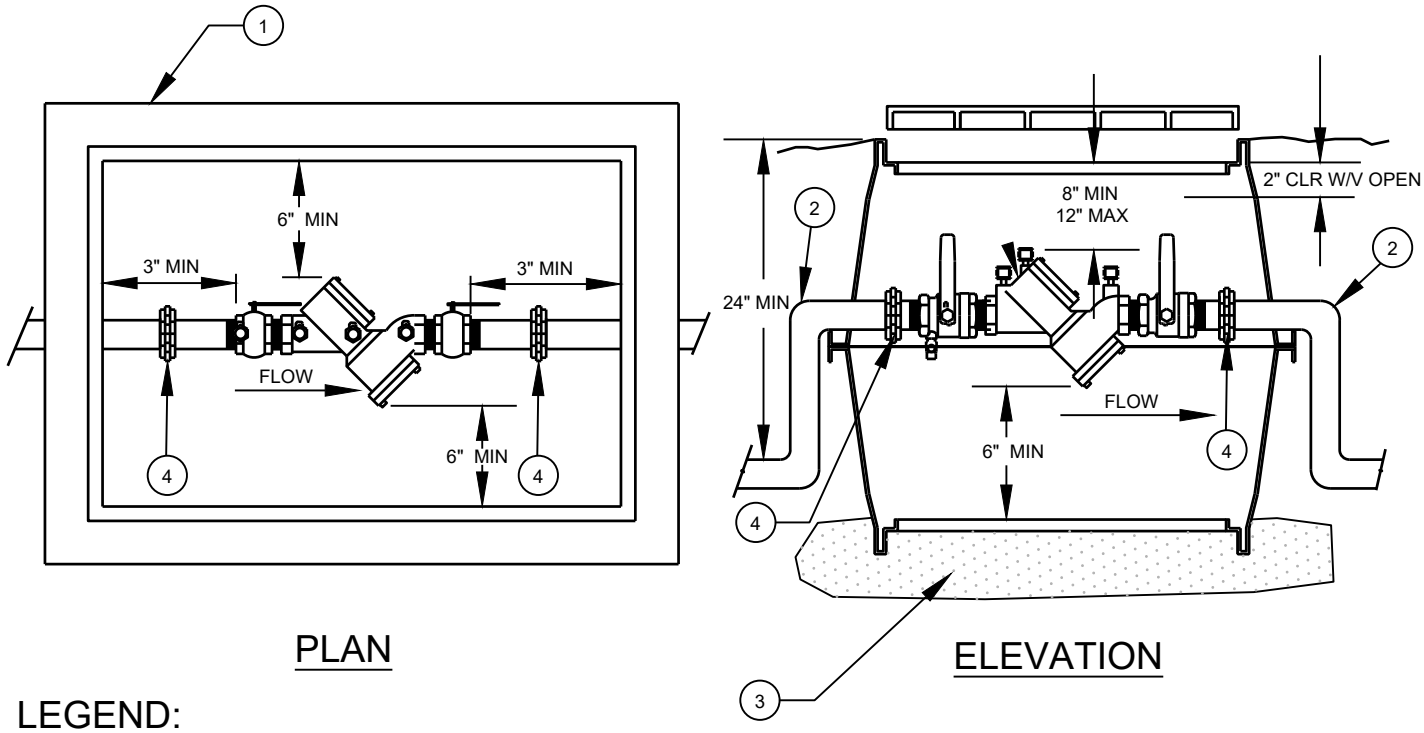

PLAN

ELEVATION

LEGEND:

(1) IN NON-TRAFFIC AREAS USE:
FOR ¾" AND 1" DCVA USE OLD CASTLE 1220 GARDEN BOX WITH A NO READER LID
FOR 1-1/2" AND 2" DCVA USE OLD CASTLE 1730 GARDEN BOX WITH A NO READER LID

IN TRAFFIC AREAS A TRAFFIC LOADED BOX MUST BE USED AND LOCATION APPROVED BY THE THE CITY OF MONROE PRIOR TO INSTALLATION.

(2) PIPE BENDS SHALL BE OUTSIDE OF THE BOX

(3) PROVIDE FREE DRAINING GRAVEL (6" MIN).

(4) INSTALL UNIONS

NOTES:

1. A PLUMBING PERMIT IS REQUIRED. OBTAIN PERMIT FROM CITY OF MONROE.
2. THOROUGHLY FLUSH LINES PRIOR TO INSTALLATION OF BACKFLOW PREVENTER.
3. DEVICE MUST BE PROTECTED FROM FREEZING CONDITIONS.
4. THE BACKFLOW ASSEMBLY SHALL BE A MODEL APPROVED BY THE STATE.
5. ALL TEST COCKS ARE REQUIRED TO BE CAPPED.
6. MAXIMUM HEIGHT OF INDOOR ASSEMBLIES SHALL BE FIVE FEET.
7. DEVICE MUST BE TESTED AFTER INSTALLATION AND ANNUALLY THEREAFTER BY A WASHINGTON STATE CERTIFIED BACKFLOW TESTER. TEST RESULTS SHALL BE SENT TO THE CITY OF MONROE PUBLIC WORKS DEPARTMENT.

MONROE WASHINGTON

DESCRIPTION
DCVA 2" AND SMALLER

DESIGNATION
517S

SCALE
NOT TO SCALE

REVISED
FEB 1, 2024

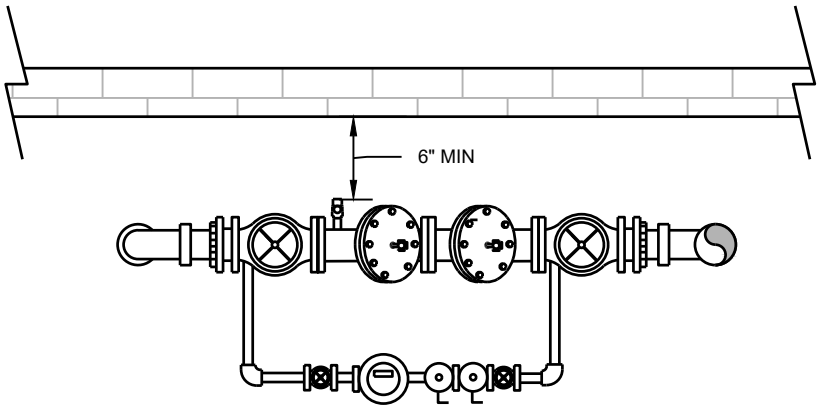

PLAN

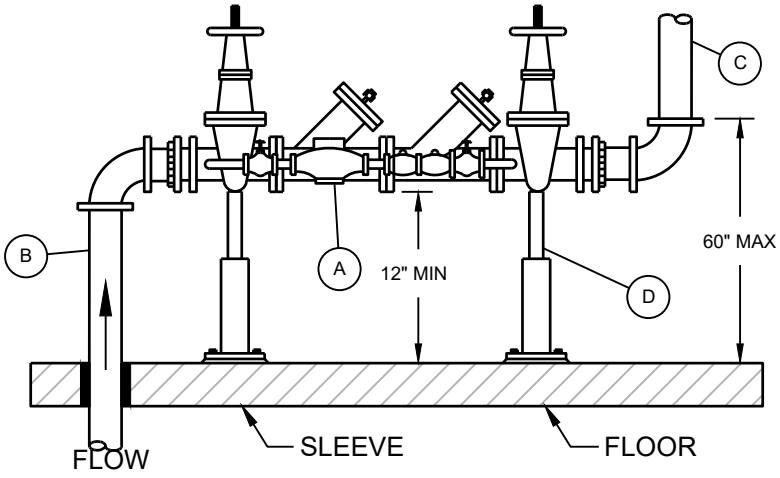

ELEVATION

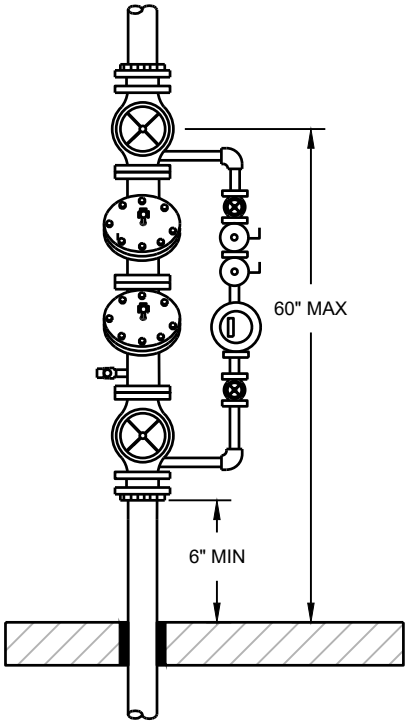

INDOOR VERTICAL INSTALLATION

LEGEND:

Ⓐ. UL-FM LISTED SOFT SEATED STATE APPROVED DOUBLE CHECK DETECTOR ASSEMBLY INCLUDING : 2-0.S&Y RESILIENT SEATED GATE VALVES AND TEST COCKS.

Ⓑ. UNI-FLANGE WITH SET SCREWS OR MJ X FL ADAPTOR WITH MEGALUG OR GALVANIZED SHACKLE TO MAIN WITH 2-3/4" RODS, OR MJ RETAINER GLANDS.

Ⓒ. DUCTILE IRON PIPE (SIZED AS REQUIRED) CLASS 52.

Ⓓ. 2 - GALVANIZED ADJUSTABLE PIPE SUPPORTS.

NOTES:

1. A PLUMBING PERMIT IS REQUIRED. OBTAIN PERMIT FROM CITY OF MONROE.
2. THOROUGHLY FLUSH LINES PRIOR TO INSTALLATION OF BACKFLOW PREVENTER.
3. DEVICE MUST BE PROTECTED FROM FREEZING CONDITIONS.
4. THE BACKFLOW ASSEMBLY SHALL BE A MODEL APPROVED BY THE STATE.
5. ALL TEST COCKS ARE REQUIRED TO BE CAPPED.
6. MAXIMUM HEIGHT OF INDOOR ASSEMBLIES SHALL BE FIVE FEET.
7. DEVICE MUST BE TESTED AFTER INSTALLATION AND ANNUALLY THEREAFTER BY A WASHINGTON STATE CERTIFIED BACKFLOW TESTER. TEST RESULTS SHALL BE SENT TO THE CITY OF MONROE PUBLIC WORKS DEPARTMENT.

MONROE WASHINGTON	DESCRIPTION: INDOOR DCDA 2.5" AND LARGER	DESIGNATION: 518LI
	SCALE: NOT TO SCALE	REVISED: FEB 1, 2024

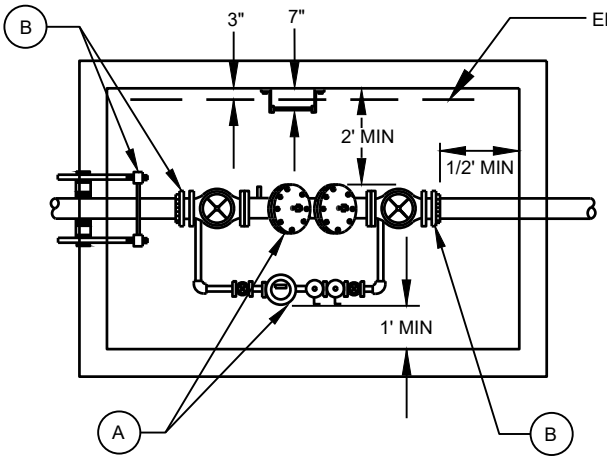

PLAN

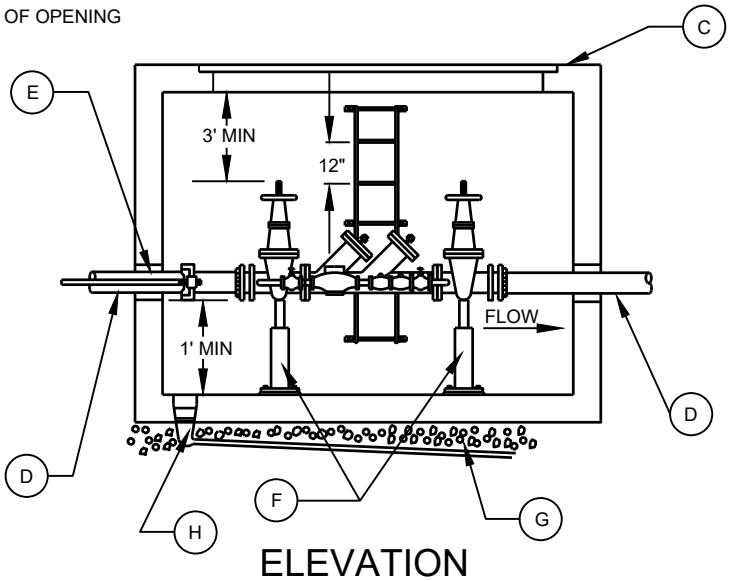

ELEVATION

LEGEND:

(A) UL-FM LISTED SOFT SEATED STATE APPROVED DOUBLE CHECK DETECTOR VALVE ASSEMBLY INCLUDING: 2-0.S.& Y RESILIENT SEATED GATE VALVES, TEST COCKS, 3/4" BRASS OR COPPER BYPASS WITH INLINE VALVES, 5/8" METER (METER TO READ IN CUBIC FEET), AND A 3/4" DOUBLE CHECK VALVE ASSEMBLY.

(B) UNI-FLANGE WITH SET SCREWS OR MJ x FL ADAPTOR WITH MEGALUG OR GALVANIZED SHACKLE TO MAIN WITH 2-3/4" RODS, OR MJ RETAINER GLANDS.

(C) PRECAST CONCRETE VAULT WITH ALUMINUM TRAFFIC RATED ACCESS HATCH (AS MANUFACTURED BY UTILITY VAULT CO OR AN APPROVED EQUAL). PROVIDE OSHA APPROVED HOT DIPPED GALVANIZED STEEL LADDER INSTALL IN SUCH AWAY THAT VAULT ACCESS DOES NOT INTERFERE WITH INSTALLED EQUIPMENT MAINTENANCE.

(D) DUCTILE IRON PIPE (SIZED AS REQUIRED) CLASS 52.

(E) WATER TIGHT GROUT SHALL BE USED IN ALL VAULT PENETRATIONS.

(F) 2 - GALVANIZED ADJUSTABLE PIPE SUPPORTS FOR 2 1/2" DIAM AND LARGER PIPE.

(G) GRAVEL FOUNDATION AS REQUIRED.

(H) DRAIN, SLOPE TO DAYLIGHT WHEN POSSIBLE OR WORKING SUMP PUMP.

NOTES:

1. OUTDOOR DCDA WILL ONLY BE ALLOWED WHEN INDOOR APPLICATIONS ARE NOT FEASIBLE AS DETERMINED BY THE CITY ENGINEER.
2. A PLUMBING PERMIT IS REQUIRED. OBTAIN PERMIT FROM CITY OF MONROE.
3. THOROUGHLY FLUSH LINES PRIOR TO INSTALLATION OF BACKFLOW PREVENTER.
4. DEVICE MUST BE PROTECTED FROM FREEZING CONDITIONS.
5. THE BACKFLOW ASSEMBLY SHALL BE A MODEL APPROVED BY THE STATE.
6. ALL TEST COCKS ARE REQUIRED TO BE CAPPED.
7. DEVICE MUST BE TESTED AFTER INSTALLATION AND ANNUALLY THEREAFTER BY A WASHINGTON STATE CERTIFIED BACKFLOW TESTER. TEST RESULTS SHALL BE SENT TO THE CITY OF MONROE PUBLIC WORKS DEPARTMENT.

MONROE WASHINGTON

DESCRIPTION
OUTDOOR DCDA

DESIGNATION
518LO

SCALE
NOT TO SCALE

REVISED
FEB 1, 2024

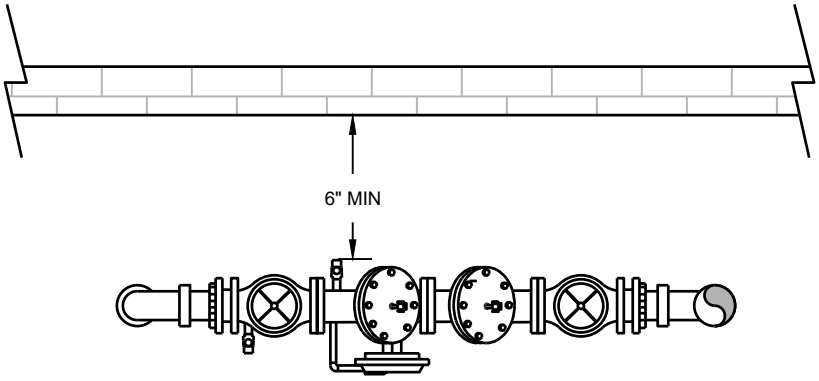

PLAN

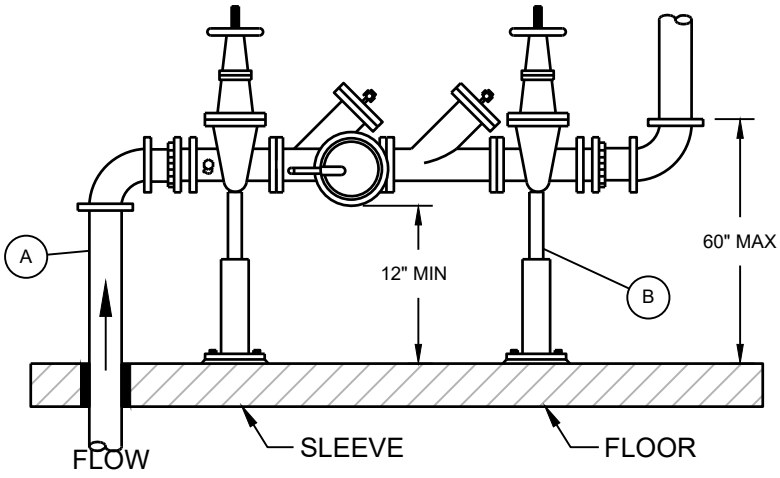

ELEVATION

LEGEND:

(A.) DUCTILE IRON PIPE (SIZED AS REQUIRED) CLASS 52.
(B.) 2 - GALVANIZED ADJUSTABLE PIPE SUPPORTS FOR 2-1/2" DIAMETER AND LARGER PIPE.

NOTES:

1. A PLUMBING PERMIT IS REQUIRED. OBTAIN PERMIT FROM CITY OF MONROE.
2. THOROUGHLY FLUSH LINES PRIOR TO INSTALLATION OF BACKFLOW PREVENTER.
3. DEVICE MUST BE PROTECTED FROM FREEZING CONDITIONS.
4. THE BACKFLOW ASSEMBLY SHALL BE A MODEL APPROVED BY THE STATE.
5. ALL TEST COCKS ARE REQUIRED TO BE CAPPED.
6. DEVICE MUST BE TESTED AFTER INSTALLATION AND ANNUALLY THEREAFTER BY A WASHINGTON STATE CERTIFIED BACKFLOW TESTER. TEST RESULTS SHALL BE SENT TO THE CITY OF MONROE PUBLIC WORKS DEPARTMENT.
7. TEE AND GATE VALVE REQUIRED ON MAIN.
8. MAXIMUM HEIGHT OF ASSEMBLY IS FIVE FEET.
9. ALL DIMENSIONS ARE MINIMUM CLEARANCE REQUIREMENTS.
10. DRAIN TO OUTSIDE BUILDING.

MONROE WASHINGTON

DESCRIPTION
INDOOR RPBA 2.5" AND LARGER

DESIGNATION
519LI

SCALE
NOT TO SCALE

REVISED
FEB 1, 2024

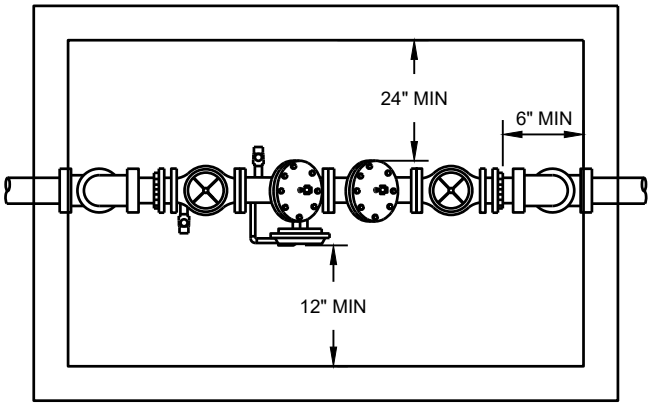

PLAN

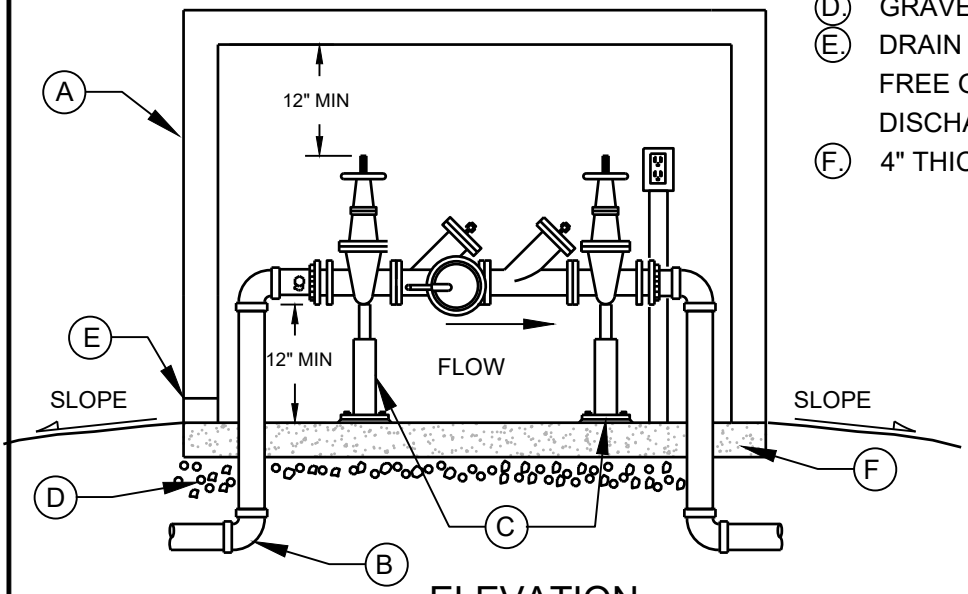

ELEVATION

LEGEND:

- (A.) ABOVE GROUND INSTALLATIONS SHALL REQUIRE A FREEZE PROOF BOX WITH ELECTRIC SERVICE PER MANUFACTURER RECOMMENDATION OR ENGINEER APPROVAL.
- (B.) DUCTILE IRON PIPE (SIZED AS REQUIRED) CLASS 52.
- (C.) 2 - GALVANIZED ADJUSTABLE PIPE SUPPORTS FOR 2-1/2" DIAMETER AND LARGER PIPE.
- (D.) GRAVEL FOUNDATION AS REQUIRED.
- (E.) DRAIN WILL BE SIZED SO AS TO PROVIDE FREE GRAVITY DRAINAGE OF MAX DISCHARGE OR RELIEF VALVE PORT.
- (F.) 4" THICK 3000 PSI CONCRETE SLAB.

NOTES:

1. A PLUMBING PERMIT IS REQUIRED. OBTAIN PERMIT FROM CITY OF MONROE.
2. THOROUGHLY FLUSH LINES PRIOR TO INSTALLATION OF BACKFLOW PREVENTER.
3. DEVICE MUST BE PROTECTED FROM FREEZING CONDITIONS.
4. THE BACKFLOW ASSEMBLY SHALL BE A MODEL APPROVED BY THE STATE.
5. ALL TEST COCKS ARE REQUIRED TO BE CAPPED.
6. DEVICE MUST BE TESTED AFTER INSTALLATION AND ANNUALLY THEREAFTER BY A WASHINGTON STATE CERTIFIED BACKFLOW TESTER. TEST RESULTS SHALL BE SENT TO THE CITY OF MONROE PUBLIC WORKS DEPARTMENT.
7. TEE AND GATE VALVE REQUIRED ON MAIN.
8. ALL DIMENSIONS ARE MINIMUM CLEARANCE REQUIREMENTS.

MONROE WASHINGTON

DESCRIPTION

OUTDOOR RPBA 2.5" AND LARGER

DESIGNATION

519LO

SCALE

NOT TO SCALE

REVISED

FEB 1, 2024

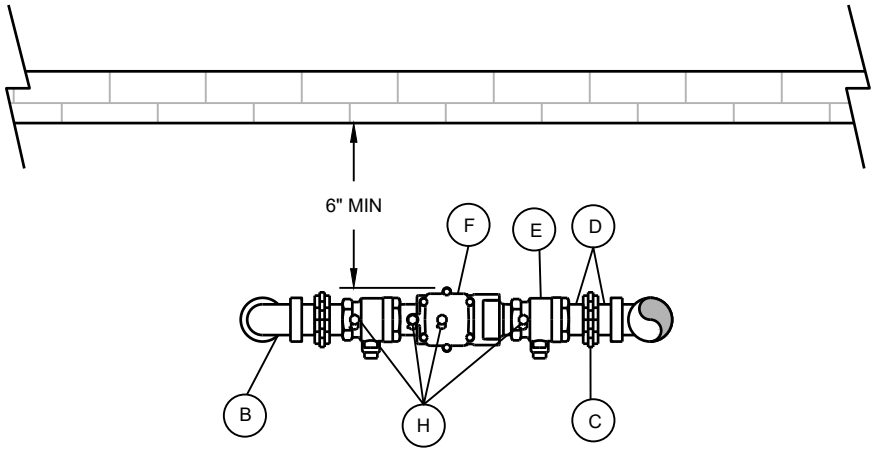

PLAN

LEGEND:

- Ⓐ SERVICE LINE TYPE K COPPER OR APPROVED EQUAL
- Ⓑ 90° BEND
- Ⓒ UNION
- Ⓓ NIPPLE
- Ⓔ SHUT OFF VALVE
- Ⓕ ASSEMBLY BODY
- Ⓖ RELIEF VALVE
- Ⓗ TEST COCKS

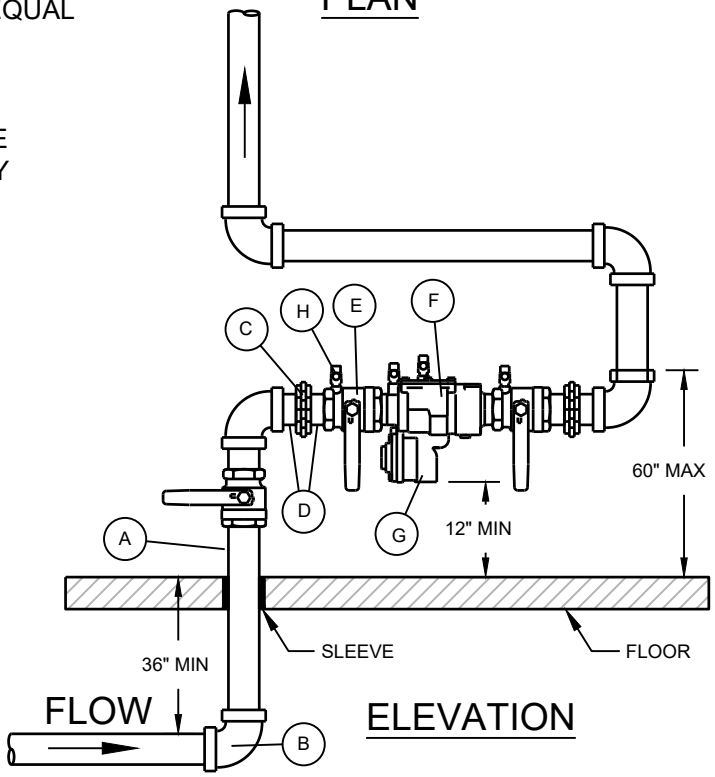

ELEVATION

NOTES:

1. A PLUMBING PERMIT IS REQUIRED. OBTAIN PERMIT FROM CITY OF MONROE.
2. THOROUGHLY FLUSH LINES PRIOR TO INSTALLATION OF BACKFLOW PREVENTER.
3. DEVICE MUST BE PROTECTED FROM FREEZING CONDITIONS.
4. THE BACKFLOW ASSEMBLY SHALL BE A MODEL APPROVED BY THE STATE.
5. ALL TEST COCKS ARE REQUIRED TO BE CAPPED.
6. MAXIMUM HEIGHT OF INDOOR ASSEMBLIES SHALL BE FIVE FEET.
7. DEVICE MUST BE TESTED AFTER INSTALLATION AND ANNUALLY THEREAFTER BY A WASHINGTON STATE CERTIFIED BACKFLOW TESTER. TEST RESULTS SHALL BE SENT TO THE CITY OF MONROE PUBLIC WORKS DEPARTMENT.
8. FACE SHUT OFF VALVE HANDLES AWAY FROM WALL.
9. DRAIN TO OUTSIDE BUILDING.

MONROE WASHINGTON

DESCRIPTION

INDOOR RPBA 2" OR SMALLER

DESIGNATION

519SI

SCALE: NOT TO SCALE

REVISED: FEB 1, 2024

LEGEND:

- (A) SERVICE LINE TYPE K COPPER OR APPROVED EQUAL
- (B) 90° BEND
- (C) UNION
- (D) NIPPLE
- (E) SHUT OFF VALVE
- (F) ASSEMBLY BODY
- (G) RELIEF VALVE
- (H) TEST COCKS
- (I) FREEZE PROOF BOX WITH HEAT TAPE AND ELECTRIC SERVICE PER MANUFACTURER RECOMMENDATION OR APPROVAL OF CITY ENGINEER

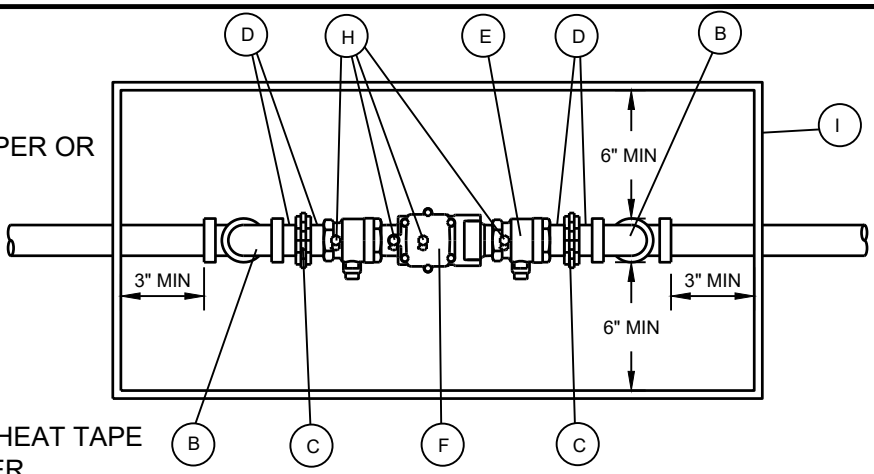

PLAN

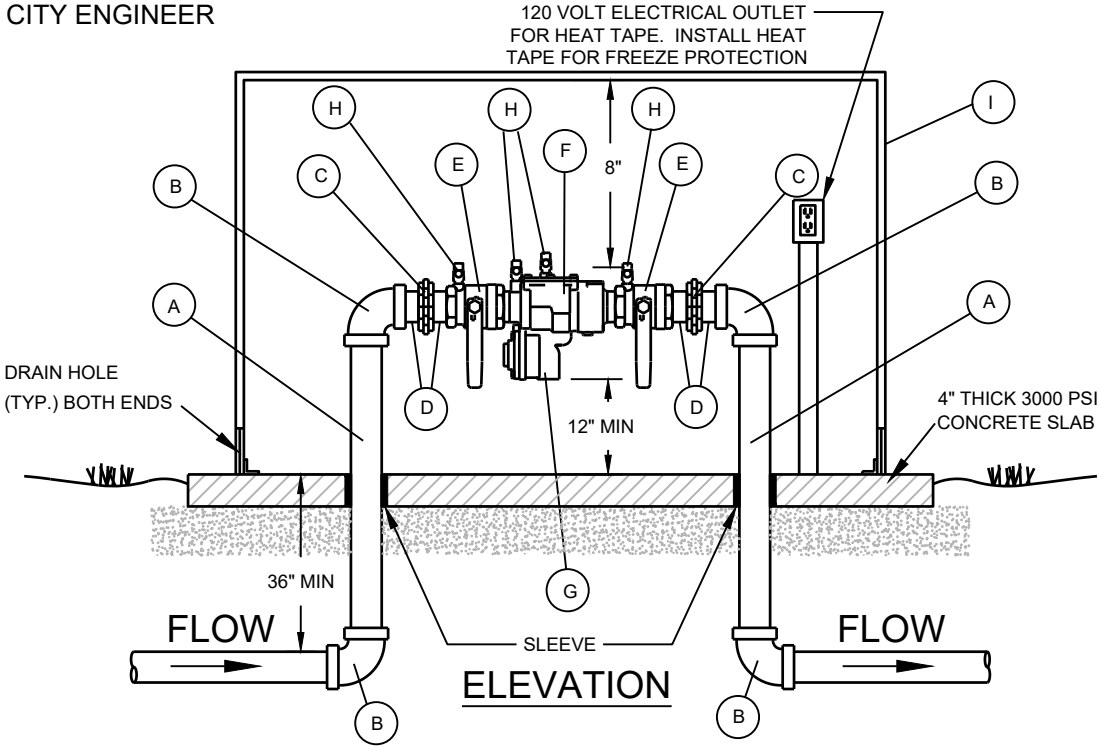

ELEVATION

NOTES:

1. A PLUMBING PERMIT IS REQUIRED. OBTAIN PERMIT FROM CITY OF MONROE.
2. THOROUGHLY FLUSH LINES PRIOR TO INSTALLATION OF BACKFLOW PREVENTER.
3. DEVICE MUST BE PROTECTED FROM FREEZING CONDITIONS.
4. THE BACKFLOW ASSEMBLY SHALL BE A MODEL APPROVED BY THE STATE.
5. ALL TEST COCKS ARE REQUIRED TO BE CAPPED.
6. DEVICE MUST BE TESTED AFTER INSTALLATION AND ANNUALLY THEREAFTER BY A WASHINGTON STATE CERTIFIED BACKFLOW TESTER. TEST RESULTS SHALL BE SENT TO THE CITY OF MONROE PUBLIC WORKS DEPARTMENT.

MONROE WASHINGTON

DESCRIPTION

OUTDOOR RPBA 2" OR SMALLER

DESIGNATION

519SO

SCALE

NOT TO SCALE

REVISED

FEB 1, 2024

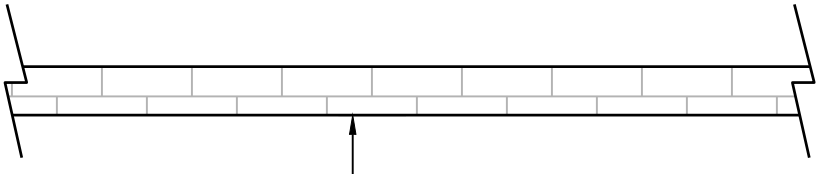

PLAN

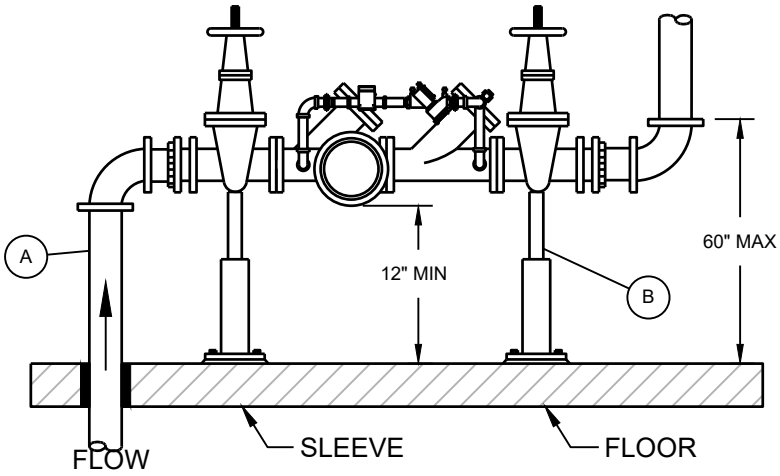

ELEVATION

LEGEND:

Ⓐ DUCTILE IRON PIPE (SIZED AS REQUIRED) CLASS 52.

Ⓑ 2 - GALVANIZED ADJUSTABLE PIPE SUPPORTS FOR 2-1/2" DIAMETER AND LARGER PIPE.

NOTES:

1. A PLUMBING PERMIT IS REQUIRED. OBTAIN PERMIT FROM CITY OF MONROE.
2. THOROUGHLY FLUSH LINES PRIOR TO INSTALLATION OF BACKFLOW PREVENTER.
3. DEVICE MUST BE PROTECTED FROM FREEZING CONDITIONS.
4. THE BACKFLOW ASSEMBLY SHALL BE A MODEL APPROVED BY THE STATE.
5. ALL TEST COCKS ARE REQUIRED TO BE CAPPED.
6. DEVICE MUST BE TESTED AFTER INSTALLATION AND ANNUALLY THEREAFTER BY A WASHINGTON STATE CERTIFIED BACKFLOW TESTER. TEST RESULTS SHALL BE SENT TO THE CITY OF MONROE PUBLIC WORKS DEPARTMENT.
7. TEE AND GATE VALVE REQUIRED ON MAIN.
8. MAXIMUM HEIGHT OF ASSEMBLY IS FIVE FEET. ALL DIMENSIONS ARE MINIMUM CLEARANCE REQUIREMENTS.
9. DRAIN TO OUTSIDE BUILDING.
10. A CITY APPROVED VALVE IS REQUIRED BETWEEN THE SUPPLY MAIN AND THE RPDA.

MONROE WASHINGTON

DESCRIPTION

INDOOR RPDA 2.5" AND LARGER

DESIGNATION

520LI

SCALE

NOT TO SCALE

REVISED

FEB 1, 2024

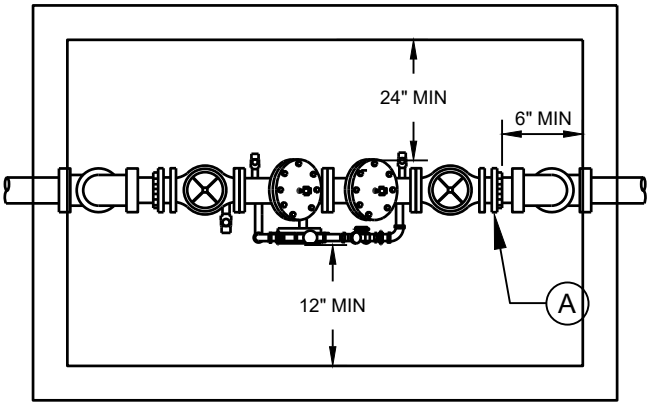

PLAN

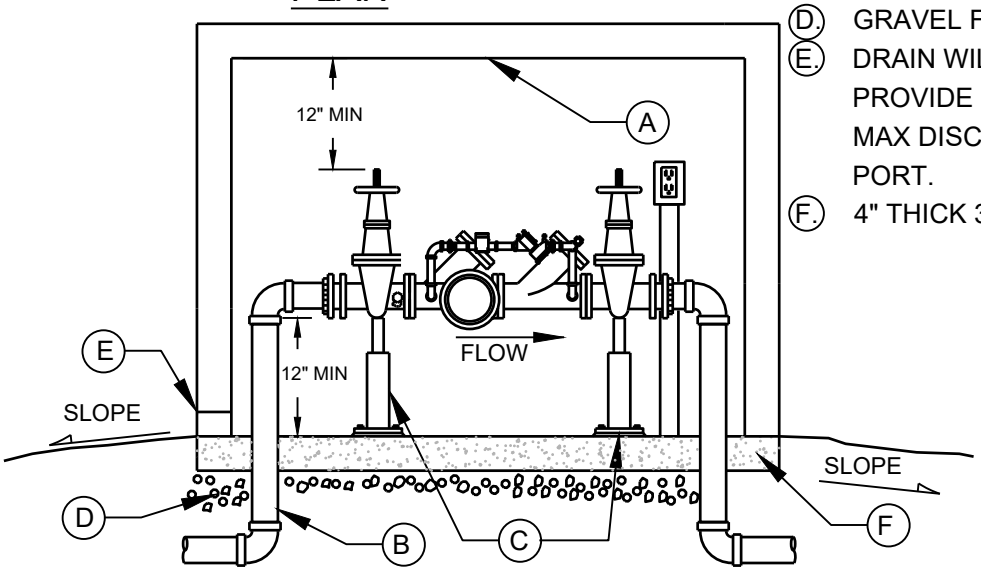

ELEVATION

LEGEND:

Ⓐ ABOVE GROUND INSTALLATIONS SHALL REQUIRE A FREEZE PROOF BOX WITH ELECTRIC SERVICE PER MANUFACTURER RECOMMENDATION OR ENGINEER APPROVAL.

Ⓑ DUCTILE IRON PIPE (SIZED AS REQUIRED) CLASS 52.

Ⓒ 2 - GALVANIZED ADJUSTABLE PIPE SUPPORTS FOR 2-1/2" DIAMETER AND LARGER PIPE.

Ⓓ GRAVEL FOUNDATION AS REQUIRED.

Ⓔ DRAIN WILL BE SIZED SO AS TO PROVIDE FREE GRAVITY DRAINAGE OF MAX DISCHARGE OR RELIEF VALVE PORT.

Ⓕ 4" THICK 3000 PSI CONCRETE SLAB.

NOTES:

1. A PLUMBING PERMIT IS REQUIRED. OBTAIN PERMIT FROM CITY OF MONROE.
2. THOROUGHLY FLUSH LINES PRIOR TO INSTALLATION OF BACKFLOW PREVENTER.
3. DEVICE MUST BE PROTECTED FROM FREEZING CONDITIONS.
4. THE BACKFLOW ASSEMBLY SHALL BE A MODEL APPROVED BY THE STATE.
5. ALL TEST COCKS ARE REQUIRED TO BE CAPPED.
6. DEVICE MUST BE TESTED AFTER INSTALLATION AND ANNUALLY THEREAFTER BY A WASHINGTON STATE CERTIFIED BACKFLOW TESTER. TEST RESULTS SHALL BE SENT TO THE CITY OF MONROE PUBLIC WORKS DEPARTMENT.
7. TEE AND GATE VALVE REQUIRED ON MAIN.
8. ALL DIMENSIONS ARE MINIMUM CLEARANCE REQUIREMENTS.
9. ABOVE GROUND INSTALLATION ONLY.
10. A CITY APPROVED VALVE IS REQUIRED BETWEEN THE SUPPLY MAIN AND THE VAULT.

MONROE WASHINGTON

DESCRIPTION

OUTDOOR RPDA 2.5" AND LARGER

SCALE: NOT TO SCALE

REVISED: FEB 1, 2024

DESIGNATION

520LO

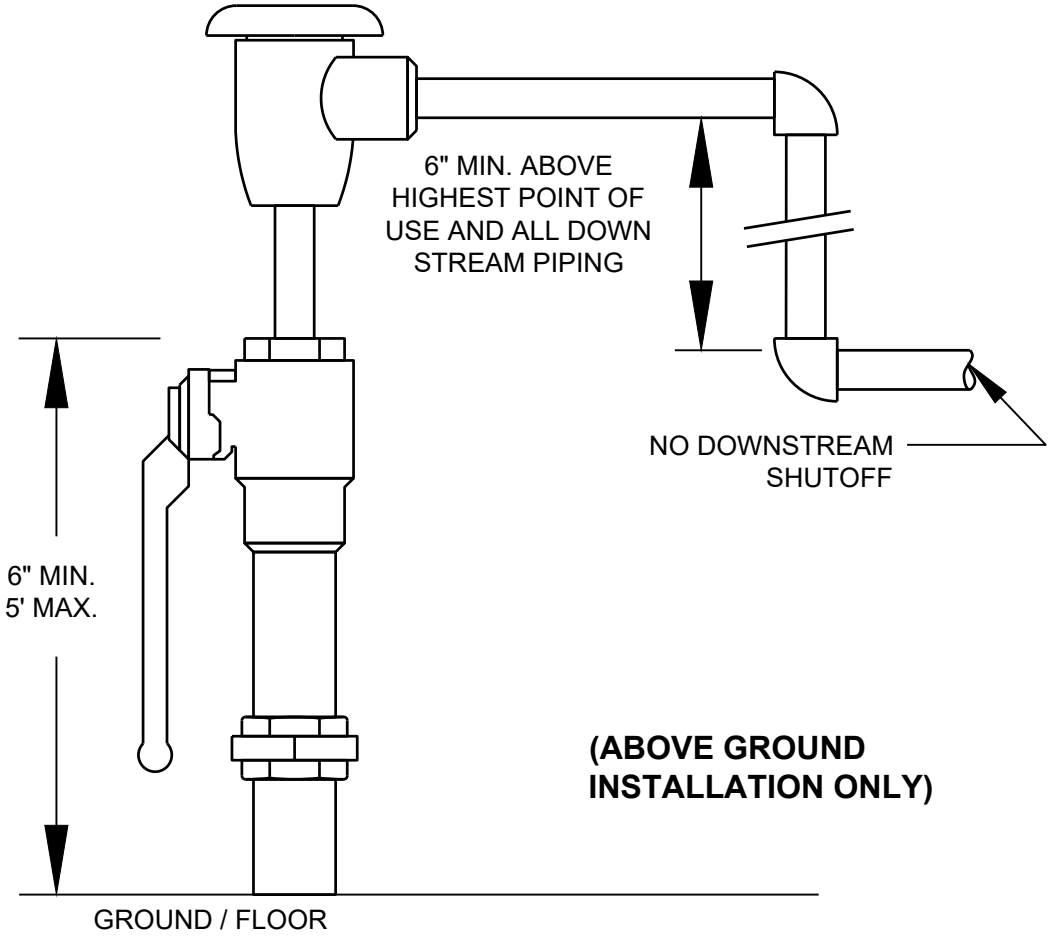

NOTES:

1. A PLUMBING PERMIT IS REQUIRED. OBTAIN PERMIT FROM CITY OF MONROE.
2. THOROUGHLY FLUSH LINES PRIOR TO INSTALLATION OF ATMOSPHERIC VACUUM BREAKER.
3. DEVICE MUST BE PROTECTED FROM FREEZING CONDITIONS.
4. THE BACKFLOW ASSEMBLY SHALL BE A MODEL APPROVED BY THE STATE.
5. AVB MUST BE INSTALLED VERTICALLY.
6. AVB MUST BE INSTALLED 6" MIN ABOVE THE HIGHEST POINT OF USE AND ALL DOWN STREAM PIPING.
7. DESIGNED FOR BACK SIPHONAGE ONLY. NOT FOR BACK PRESSURE.
8. IF AN AVB IS INSTALLED INDOORS, CONSIDERATION MUST BE GIVEN TO WATER LEAKAGE IF THE AVB FAILS (EXCESSIVE WATER SPILLAGE).
9. DO NOT INSTALL IN AN AREA SUBJECT TO FLOODING.
10. NO DOWNSTREAM VALVES ARE ALLOWED ON AVB.
11. AVB DOES NOT REQUIRE TESTING BY A BACKFLOW ASSEMBLY TESTER.

MONROE WASHINGTON

DESCRIPTION

ATMOSPHERIC VACUUM BREAKER (AVB)

DESIGNATION

521

SCALE
NOT TO SCALE

REVISED
FEB 1, 2024

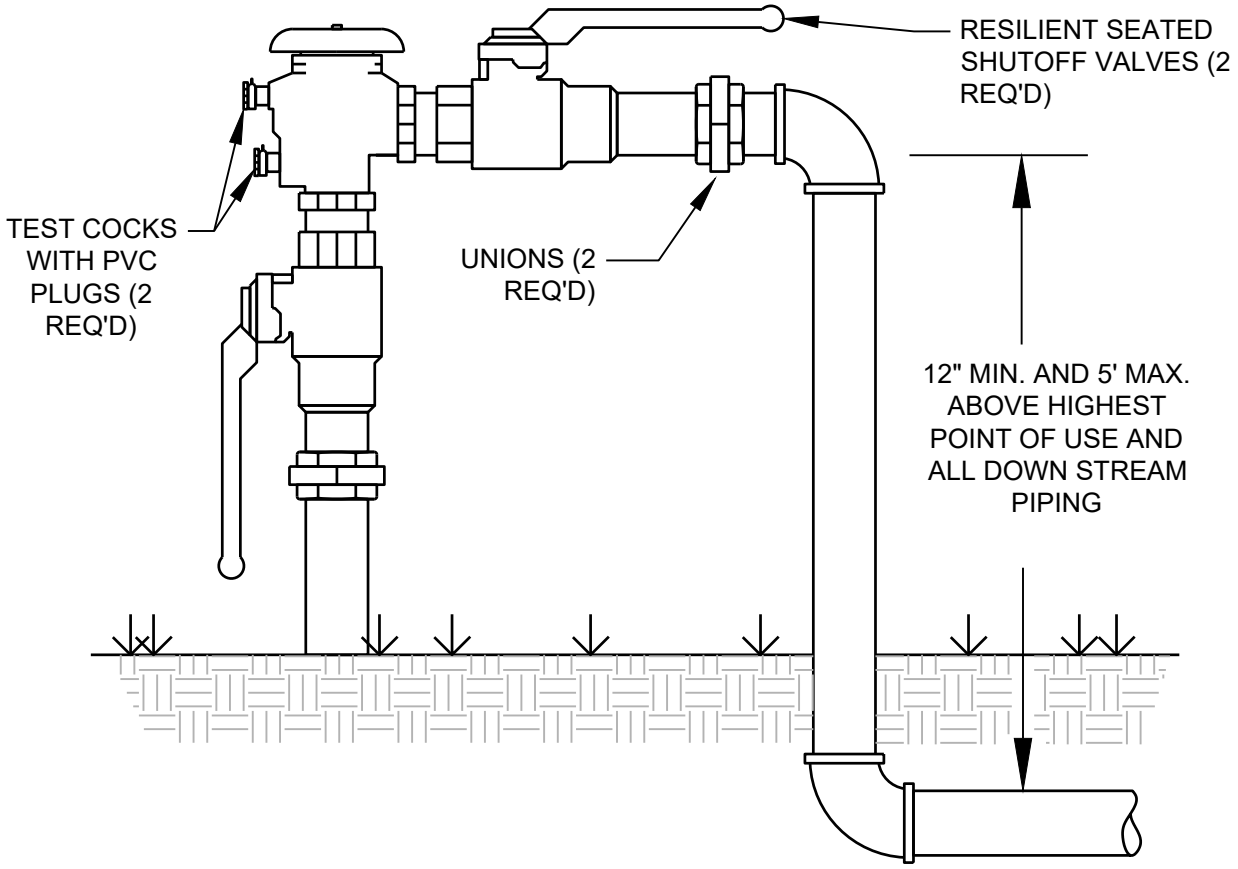

(ABOVE GROUND INSTALLATION ONLY)

NOTES:

1. A PLUMBING PERMIT IS REQUIRED. OBTAIN PERMIT FROM CITY OF MONROE.
2. THOROUGHLY FLUSH LINES PRIOR TO INSTALLATION OF BACKFLOW PREVENTER.
3. DEVICE MUST BE PROTECTED FROM FREEZING CONDITIONS.
4. THE BACKFLOW ASSEMBLY SHALL BE A MODEL APPROVED BY THE STATE.
5. ALL TEST COCKS ARE REQUIRED TO BE CAPPED.
6. MAXIMUM HEIGHT OF INDOOR ASSEMBLIES SHALL BE FIVE FEET.
7. DEVICE MUST BE TESTED AFTER INSTALLATION AND ANNUALLY THEREAFTER BY A WASHINGTON STATE CERTIFIED BACKFLOW TESTER. TEST RESULTS SHALL BE SENT TO THE CITY OF MONROE PUBLIC WORKS DEPARTMENT.
8. PVBA MUST BE INSTALLED VERTICALLY.
9. PVBA MUST BE INSTALLED 12" MIN ABOVE FLOOD LEVEL IF FACTORY MOUNTED OR 6" MIN ABOVE FLOOD LEVEL FOR GENERAL PLUMBING.
10. PVBA MUST BE INSTALLED 12" ABOVE THE HIGHEST POINT OF USE AND ALL DOWN STREAM PIPING.
11. DESIGNED FOR BACK SIPHONAGE ONLY. NOT FOR BACK PRESSURE.
12. IF AN PVBA IS INSTALLED INDOORS, CONSIDERATION MUST BE GIVEN TO WATER LEAKAGE IF THE BACKFLOW PREVENTER FAILS (EXCESSIVE WATER SPILLAGE).
13. DO NOT INSTALL IN AN AREA SUBJECT TO FLOODING.

MONROE WASHINGTON

DESCRIPTION

PRESSURE VACUUM BREAKER ASSY.

DESIGNATION

522

SCALE

NOT TO SCALE

REVISED

FEB 1, 2024

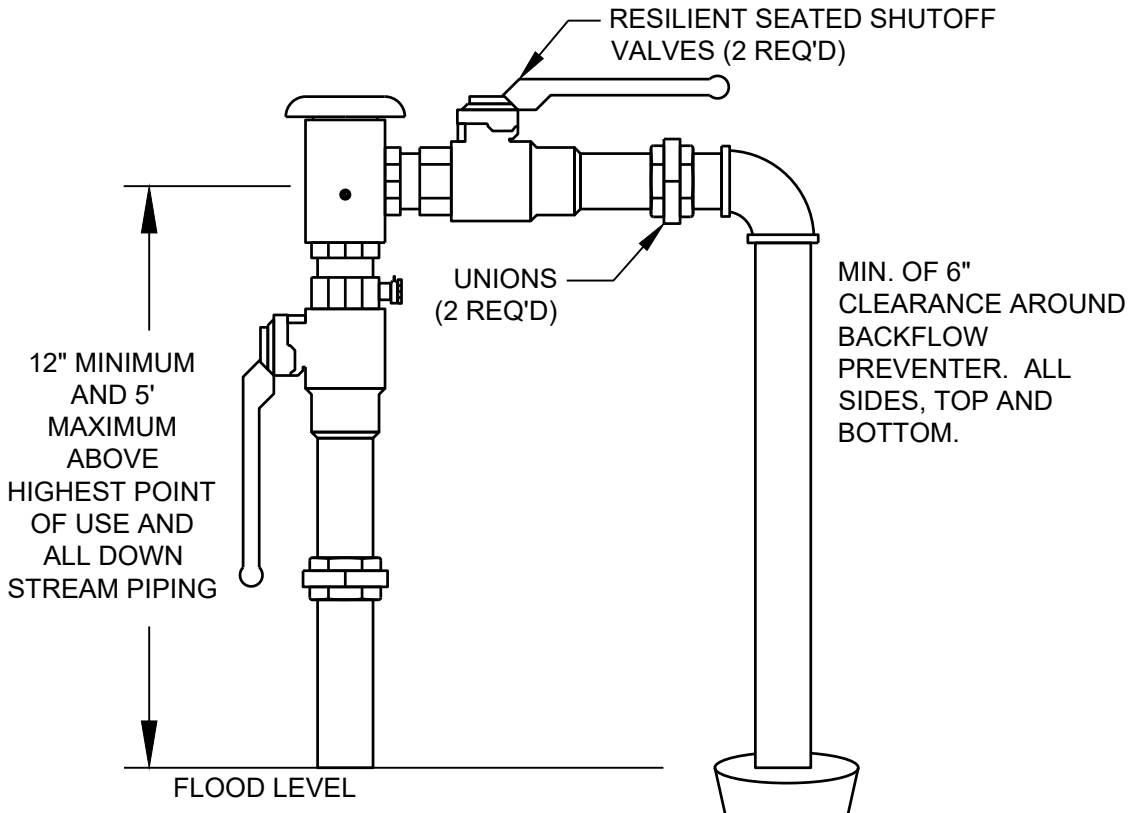

(ABOVE GROUND INSTALLATION ONLY)

NOTES:

1. A PLUMBING PERMIT IS REQUIRED. OBTAIN PERMIT FROM CITY OF MONROE.
2. THOROUGHLY FLUSH LINES PRIOR TO INSTALLATION OF BACKFLOW PREVENTER.
3. DEVICE MUST BE PROTECTED FROM FREEZING CONDITIONS.
4. THE BACKFLOW ASSEMBLY SHALL BE A MODEL APPROVED BY THE STATE.
5. ALL TEST COCKS ARE REQUIRED TO BE CAPPED.
6. MAXIMUM HEIGHT OF INDOOR ASSEMBLIES SHALL BE FIVE FEET.
7. DEVICE MUST BE TESTED AFTER INSTALLATION AND ANNUALLY THEREAFTER BY A WASHINGTON STATE CERTIFIED BACKFLOW TESTER. TEST RESULTS SHALL BE SENT TO THE CITY OF MONROE PUBLIC WORKS DEPARTMENT.
8. SVBA MUST BE INSTALLED VERTICALLY.
9. SVBA MUST BE INSTALLED 12" MIN ABOVE FLOOD LEVEL IF FACTORY MOUNTED OR 6" MIN ABOVE FLOOD LEVEL FOR GENERAL PLUMBING.
10. SVBA MUST BE INSTALLED A MINIMUM OF 12" ABOVE THE HIGHEST POINT OF USE AND ALL DOWN STREAM PIPING.
11. DESIGNED FOR BACK SIPHONAGE ONLY. NOT FOR BACK PRESSURE.
12. IF AN AVB IS INSTALLED INDOORS, CONSIDERATION MUST BE GIVEN TO WATER LEAKAGE IF THE BACKFLOW PREVENTER FAILS (EXCESSIVE WATER SPILLAGE).
13. DO NOT INSTALL IN AN AREA SUBJECT TO FLOODING.

MONROE WASHINGTON

DESCRIPTION

SPILL RESIST. VACUUM BREAKER ASSY.

DESIGNATION

523

SCALE: NOT TO SCALE

REVISED: FEB 1, 2024

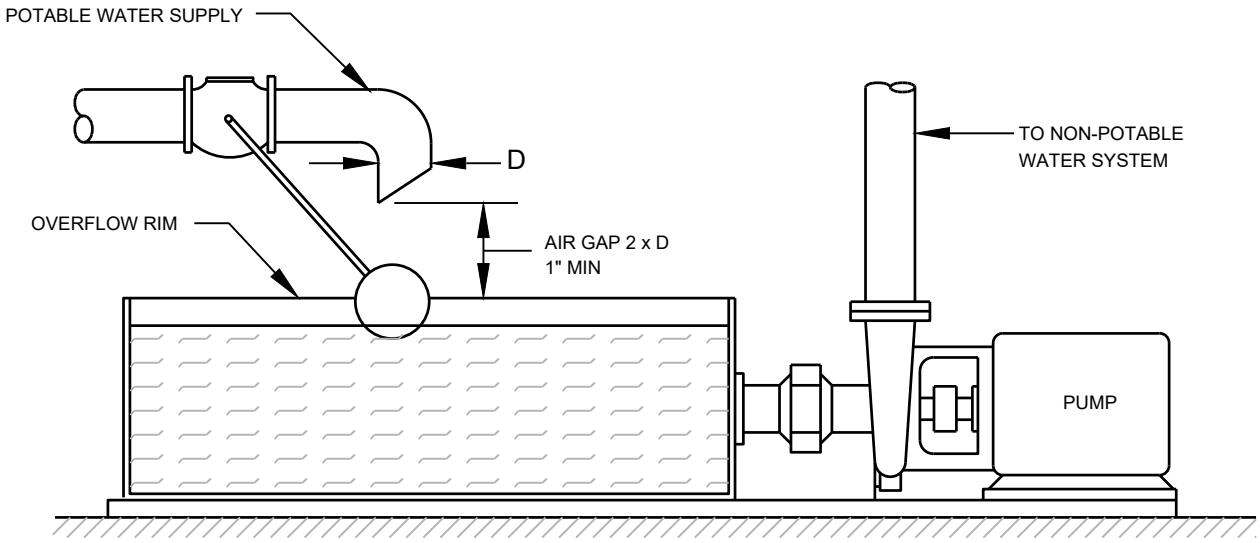

APPROVED AIR GAP SEPARATION

AN APPROVED AIR GAP IS A PHYSICAL SEPARATION BETWEEN THE FREE FLOWING DISCHARGE END OF A POTABLE WATER SUPPLY PIPELINE AND THE OVERFLOW RIM OF AN OPEN OR NON-PRESSURE RECEIVING VESSEL. THESE VERTICAL, PHYSICAL SEPARATIONS MUST BE AT LEAST TWICE THE DIAMETER OF THE INLET PIPE BUT NEVER LESS THAN ONE INCH. IF SPLASHING IS A PROBLEM, TUBULAR SCREENS MAY BE ATTACHED OR THE SUPPLY LINE OUTLET MAY BE CUT AT A 45 DEGREE ANGLE. IF SUPPLY LINE IS CUT AT A 45 DEGREE ANGLE THE AIR GAP DISTANCE IS MEASURED FROM THE CENTER OF THE ANGLE. HOSES ARE NOT ALLOWED. BYPASSES ARE NOT ALLOWED. THE INSPECTION OF AIR GAPS SHALL BE INCLUDED IN THE YEARLY TESTING PROGRAM FOR BACKFLOW DEVICES.

MONROE WASHINGTON

DESCRIPTION
AIR GAP

DESIGNATION
524

SCALE
NOT TO SCALE

REVISED
FEB 1, 2024

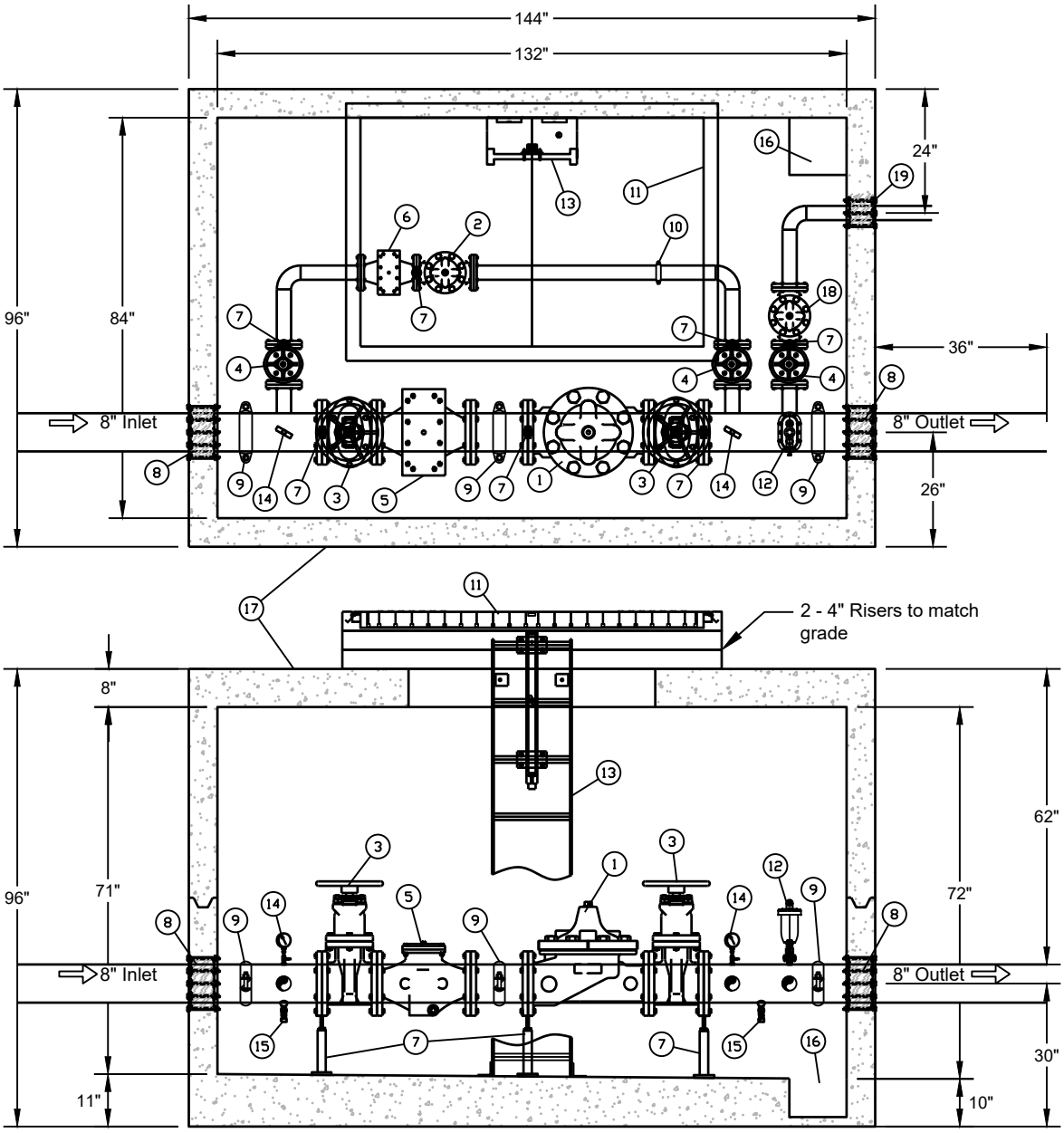

SEE SHEET 525A - "PRV STATION LEGEND" FOR LEGEND

NOTES:

1. ALL PIPING IS SCHEDULE 40 304 SST.
2. VAULT SUPPLIER WILL SUPPLY AN INDIVIDUAL WITH AT LEAST 10 YRS EXPERIENCE WITH CONTROL VALVE EQUIPMENT START-UP AND TROUBLE SHOOTING TO INSTALL, CONFIGURE, AND SET UP PRV.
3. VAULT SUPPLIER TO PROVIDE 3 PRINT COPIES AND 1 PDF FILE OF O & M MANUALS.
4. VAULT SHOWN INCLUDES ALL EQUIPMENT REQUIRED FOR A FULLY FUNCTIONING PRV STATION. THIS INCLUDES DELIVERY TO SITE.
5. INSTALLER WILL OFF-LOAD VAULT AND COORDINATE WITH SUPPLIER DELIVERY. INSTALLER MUST PROVIDE ALL EXCAVATION AND FINAL CONNECTIONS.
6. DISINFECTIONS: FINAL GRADE OF THE VAULT AND ANY CONNECTIONS OUTSIDE OF THE VAULT ARE THE INSTALLER'S RESPONSIBILITY.
7. PACKAGED PRV SHALL BE AMERICAN IRON AND STEEL COMPLIANT.

MONROE WASHINGTON

DESCRIPTION

PRV STATION

DESIGNATION

525

SCALE

NOT TO SCALE

REVISED

FEB 1, 2024

BILL OF MATERIALS		
ITEM	QTY	DESCRIPTION
1	1	8" CLA-VAL 692G-01YBCSVKC PSI REDUCING VALVE DISST. TRIM 150 FLG EPOXY COATED W/ X101 INDICATOR OR WATTS EQUAL
2	1	3" CAL-VAL 92G-01YBCSVKC PSI REDUCING VALVE DISST. TRIM 150 FLG EPOXY COATED W/ X101 INDICATOR OR WATTS EQUAL
3	2	8" R/S GATE VALVE 150 FLXFL C-509 NSF-61 ANSI/AWWA WITH HAND WHEELS
4	3	3" R/S GATE VALVE 150 FLXFL C-509 NSF-61 ANSI/AWWA WITH HAND WHEELS
5	1	8" CLA-VAL H-STRAINER
6	1	3" CLA-VAL H-STRAINER
7	6	STANDON ADJUSTABLE PIPE SUPPORT: MODEL S89 FLANGE STYLE
8	2	8" LINK-SEAL LS-475 ASSEMBLY
9	3	8" GRUVLOK MODEL 74FP COUPLING
10	1	3" GRUVLOK MODEL 74PF COUPLING
11	1	HALLIDAY 72" x 48" H20 LOAD ALUMINUM HATCH MODEL # H2R7248
12	1	1" COMBINATION AIR VALVE W/ ISOLATION VALVE
13	1	HALLIDAY SERIES L1B ALUMINUM LADDER W/ SERIES L1E LADDER EXTENSION
14	2	$2\frac{1}{2}$" 0-200 PSI GAUGE LIQUID FILLED W/ $\frac{1}{4}$ SST. ISOLATION VALVE
15	2	SST. BALL VALVE FOR PSI TRANSDUCERS
16	1	12" L x 12" W x 8" D Sump
17	1	PRESTIGE WWT 6" WALLED H_2O RATED PRV VAULT, OR EQUAL w/ floor of vault graded at 1% to Sump, w/ Sherman Williams Tarlock on Outside of vault and UGL Dry Lock sealant on Inside of vault. OD: 12' L x 8' W x 8' T ID: 11' L x 7' W x 6' 5" T to 6' 6" T
18	1	3" CLA-VAL 50G-01 DKC RELIEF VALVE DISST TRIM 150 FLG EPOXY COATED
19	1	3" LINK-SEAL LS-475 ASSEMBLY

SEE SHEET 525 - "PRV STATION" FOR PRV DETAILS

MONROE WASHINGTON

DESCRIPTION

PRV STATION LEGEND

DESIGNATION

525A

SCALE

NOT TO SCALE

REVISED

FEB 1, 2024

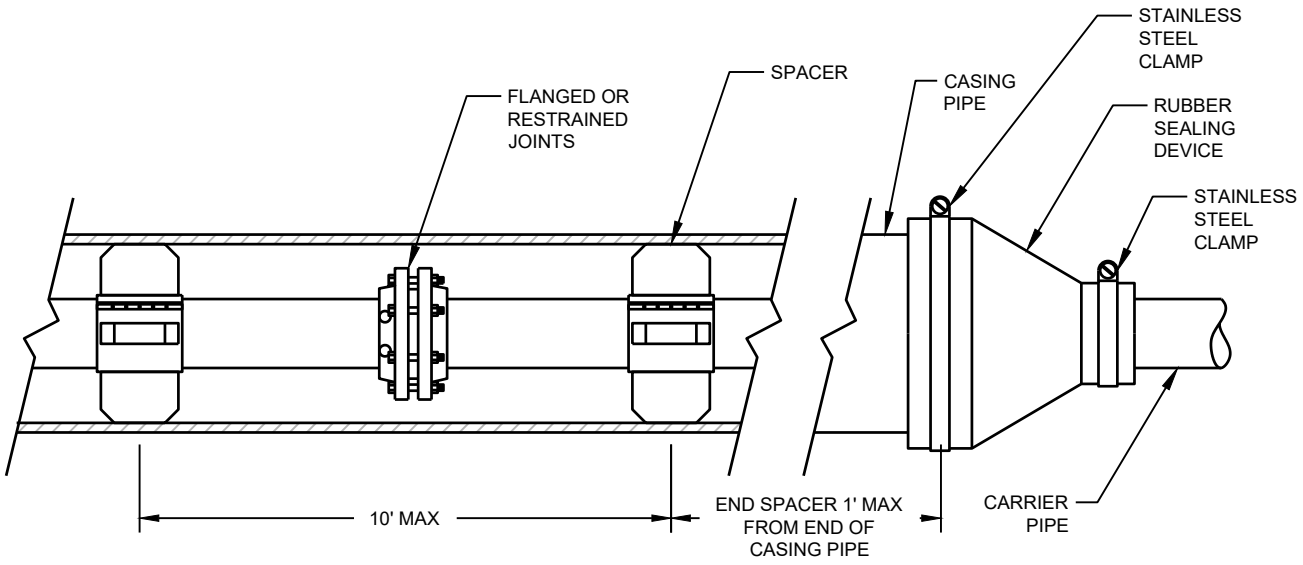

CARRIER PIPE DIAMETER	4"	6"	8"	10"	12"
CASING DIAMETER	14"	16"	18"	20"	22"*
STEEL CASING THICKNESS	0.25"	0.25"	0.25"	0.25"	0.25"
SPACER BAND WIDTH	8"	8"	8"	8"	8"

* 24" FOR DUCTILE IRON CASING

NOTES:

1. ALL JOINTS OF CARRIER PIPE WITHIN CASING SHALL BE FLANGED (FL) OR MECHANICAL JOINT (MJ) FITTINGS WITH MEG-A-LUG OR FIELD LOCK GASKET RESTRAINTS.
2. CARRIER PIPE WILL BE PRESSURE TESTED BY CONTRACTOR AND CCTV INSPECTED BY CITY CREWS BEFORE SEALING CARRIER PIPE.
3. CARRIER SKIDS SHALL BE CENTER POSITIONING TYPE.
4. MINIMUM RUNNER WIDTH SHALL BE 2".
5. RUNNER HEIGHT SHALL BE SIZED TO PROVIDE:
   - 5.1. MINIMUM 0.75" BETWEEN CARRIER PIPE BELL AND CASING PIPE WALL AT ALL TIMES.
   - 5.2. MINIMUM 1" CLEARANCE BETWEEN RUNNERS AND TIP OF CASING WALL TO PREVENT JAMMING DURING INSTALLATION.
6. STEEL CASING DIAMETERS ARE OUTSIDE DIAMETER FOR 16" AND LARGER.
7. SPACER BAND WIDTH SHALL BE 12" FOR CARRIER PIPES THAT ARE 36" DIAMETER OR GREATER.
8. FOR STEEL CASING, PROVIDE SHOP APPLIED ANTI-CORROSIVE COATING ON CASING EXTERIOR CONFORMING TO AWWA C210. MINIMUM COATING THICKNESS 16 MILS DFT (DO NOT EXCEED MANUFACTURER'S MAXIMUM THICKNESS). PRODUCT SHALL BE EQUAL TO TNEMEC HI-BUILD TNEME-TAR SERIES 46H-413.

MONROE WASHINGTON

DESCRIPTION
CASING DETAIL

DESIGNATION
526

SCALE
NOT TO SCALE

REVISED
FEB 1, 2024

CITY OF MONROE PUBLIC WORKS
DESIGN, CONSTRUCTION AND OPERATIONS STANDARDS

SECTION 6
SANITARY SEWERS

TABLE OF CONTENTS

6.1 GENERAL 1

6-2 DESIGN STANDARDS 1

6.2.1 Sewer Main Line Design Standards 1
6.2.2 Side Sewer Design Standards 2
6.2.3 Manhole Design Standards 3
6.2.4 Lift Stations 3
6.2.5 Septic Tank Systems 3
6.2.6 Grease Traps and Interceptors 3
6.2.7 Oil/Water Separators 4

6.3 CONSTRUCTION PLANS 5

6.4 CONSTRUCTION REQUIREMENTS 5

6.4.1 Survey Staking 5
6.4.2 Trench Excavation 5
6.4.3 Pipe Bedding 6
6.4.3 Laying Sewer Pipe 6
6.4.4 Alignment Tolerance 7
6.4.5 Connections to Existing 7

6.5 MATERIALS 10

6.5.1 Sewer Pipe 10
6.5.2 Manholes 11
6.5.3 Cleanouts (Standard Plan No. 611) 11
6.5.4 Joints 12

6.6 SEWER ACCEPTANCE 12

6.6.1 Cleaning 12
6.6.2 Testing 12
6.6.3 Television Inspection 12
6.6.4 Required Documentation 13

APPENDIX A – SEWER CONSTRUCTION NOTES 15

6.7 STANDARD SANITARY SEWER DRAWINGS 17

CITY OF MONROE PUBLIC WORKS
DESIGN, CONSTRUCTION AND OPERATIONS STANDARDS

SECTION 6
SANITARY SEWERS

6.1 GENERAL

Construction of all sanitary sewer shall be in accordance with the State of Washington's (WSDOT) Standard Specifications for Road, Bridge and Municipal Construction, Criteria for Sewage Works Design prepared by the Department of Ecology, American Water Works Association (AWWA) guidelines, and these Standards. If any inconsistencies occur these Standards shall have precedence.

Sanitary sewer design and construction shall be in conformance to these Standards and Title 23 of the Monroe Municipal Code (MMC).

6-2 DESIGN STANDARDS

6.2.1 Sewer Main Line Design Standards

New sanitary sewers shall be designed in anticipation of future development or redevelopment beyond the boundaries of the proposed project.

The minimum size sewer main shall be 8 inches in diameter, except a 6-inch diameter dead end line can be installed if all of the following requirements are met:

1. The maximum number of residential units is eight.
2. The 6-inch line is no longer than 150 feet.
3. A manhole is installed where the 6-inch connects to the main line.
4. The minimum slope is one foot per 100 feet.

Sewers shall have straight alignment between manholes. Maximum length of run between manholes shall be 400 feet.

Sewers on 20% slope or greater must be anchored securely with concrete anchors or equal. Thirty-six foot spacing on grades 20% to 35%. Twenty-four foot spacing on grades 35% to 50 %. Sixteen-foot spacing on grades over 50%.

Sewer mains outside public right-of-way shall be in a 20-foot-wide easement. Provide vehicle access to all manholes located in easements.

Sewer mains shall be laid below water mains at crossings to provide a vertical separation of 18 inches between the invert of the water pipe and the crown of the sewer pipe. If local conditions prevent the minimum vertical separation see Chapter 2C of the DOE Criteria for Sewage Works Design Manual for exceptions.

New gravity sewer systems shall be designed on the basis of an average daily per capita flow of sewage found in Table G2-2 of the Criteria for Sewage Works Design. In general, sewers should be designed with a peaking factor of 4 to be applied to the

average daily per capita flow rate. Other flow rates may be proposed and be based on flow rates from the Criteria for Sewage work Design as published by the Washington State Department of Ecology.

Pipe diameter, slope and flow velocity shall collectively be considered in the design of the sewer main. The Criteria for Sewage Works Design provides guidelines on minimum slopes for pipe diameters. Larger pipe diameters shall not be selected solely to achieve lesser slopes without regard to the required flow velocity. If the sewer main terminal run is not expected to be extended in the future, said terminal run slope shall be not less than 1%.

Design depth of sewer main shall be a minimum of 3 feet from finish grade to top of pipe.

An “n” value of .013 shall be used in Manning’s Formula for the design of all sewer facilities (regardless of the pipe material). Inverted siphons can use an “n” value of up to .015.

6.2.2 Side Sewer Design Standards

All connections to public sewer shall be by a gravity connection unless approved otherwise by the Director. The connection shall be made using a gasketed wye if associated with a new sewer main construction.

Each single-family residential lot shall be serviced by a single side sewer connection to the public sewer main. Each commercial building shall be serviced by at least one separate side sewer connecting to the public main. Sharing of side sewers between separate properties is not allowed.

Side sewers shall be sized in accordance with MMC 23.60.010(C) and be extended to the property line/edge of easement or the dry utilities, whichever is farthest. The depth of the side sewer stub shall be indicated in the field by the developer using a 2-inch black stenciled numeral on a white 2x4 marker post along with the word “sewer” and the depth of bury noted.

In general, side sewers shall be a minimum depth of 6 feet at the property line.

Cleanouts are required every 100 feet and at the building connection, at 90-degree bends, or combinations of bends greater than 45 degrees.

The minimum slope for 4” and 6” diameter side sewers shall be 2%.

Connection to an existing main line must be core drilled. See Standard Plan No. 611.

Ten gauge insulated locator wire or approved tracer tape manufactured for such purpose must run along the side sewer without break and terminate at the sewer stub marker or clean out at the building. The wire must extend up the sewer marker board to a height of 3 feet for new construction.

Measurement from the downstream manhole to each side sewer lateral shall be accurately shown on the record drawings.

6.2.3 Manhole Design Standards

Manholes shall not be located in curbs or low points, nor located in sidewalks or crosswalks unless approved by the City. Manholes placed in unpaved areas shall have a 12-inch wide by 2-inch minimum depth asphaltic ring around the external casting. Asphalt shall be placed on a firm and unyielding base.

Manholes are required at changes in pipe slope, alignment, or size. A manhole is required at the end of all sewer mains, provided that a cleanout may be installed at the end of sewer runs less than 200 feet and having a minimum slope of 1%, and that will be extended in the future.

The channel drop within manholes must be 0.1 foot from inflow to outflow.

The minimum inside diameter of manholes shall be 48 inches. A 54-inch manhole is required for pipe connections larger than 24 inches in diameter, or if an inside drop manhole is proposed. Manholes deeper than 19 feet shall be a minimum of 60 inches in diameter.

6.2.4 Lift Stations

The inclusion of lift stations in the design of new plats is strongly discouraged. Unless physically impossible or exorbitantly expensive, new subdivisions shall provide gravity sewer to the City's existing sewer system.

The Director will approve plans for public and private pump stations on an individual basis.

Private pressure lines are not permitted on public right-of-way. Pressure lines are to become gravity at the side sewer connection at the edge of right-of-way.

6.2.5 Septic Tank Systems

Septic tank systems are generally not allowed. Exceptions can be found in MMC 13.08.030.

6.2.6 Grease Traps and Interceptors

If it is determined by the Director the building will be preparing food or otherwise generating fats, oils and grease, the customer shall be required to install a city approved grease interceptor per MMC 13.10.140B and MMC 13.10.140C. The applicant shall submit a plan indicating the type, size and location of the grease interceptor and install it as part of the building plumbing permit. If a hydromechanical grease interceptor (HGI) is allowed instead of a gravity grease interceptor (GCI), it shall be sized and installed as per the current edition of the Uniform Plumbing Code (UPC) and approved by the Director prior to installation.

A grease interception device and/or other biological, chemical, or other pretreatment approved by the Director, must be installed by the owner at their expense. Effluent

discharged from any grease interceptor must not contain a visible sheen or accumulations of fats, oils, and grease (FOG), and must be in compliance with the City of Monroe regulations for discharge to the sanitary sewer.

1. Design of the grease interceptor will be subject to approval by the Director. Size must be determined by the Uniform Plumbing Code as adopted by the City, and manufacturer's recommendations.
2. Fixtures in the kitchen area which discharge wastewater containing grease are to be connected to the grease interceptor. Such fixtures include pot sinks, range woks, janitor's sink, floor sinks, and rotoclones. Toilets, urinals, and wash basins must not flow through any interceptor. Note: All full-service kitchens with dishwashers must discharge to a GCI.
3. If the interceptor is located outside the building within twenty feet of a driveway for access by maintenance vehicles.
4. The interceptor must be filled with clean water prior to start-up of system.
5. Access to the interceptor must be available for inspection and compliance determination sampling at all times.
6. When pre-treatment is no longer required, the inlet and outlet pipes must be permanently plugged, the separation chambers pumped out, and the vault removed, or filled with compacted crushed rock or controlled density fill.

6.2.7 Oil/Water Separators

Whenever an industrial or commercial business generates mineral /petroleum /non-biodegradable cutting oils exceeding 100 milligrams per liter to be discharged to the sanitary sewer, pre-treatment is required. An oil/water separation device must be installed by the property owner at their expense as specified on Standard Details. Selection and sizing of an oil/water separator must be subject to approval of the Director. Water discharged from any oil/water separator to the sanitary sewer system must not contain in excess of 100 milligrams per liter of petroleum oil, non-biodegradable cutting oil and mineral products, and must be in compliance with the City of Monroe regulations MMC 13.10.050 for discharge to the sanitary sewer.

1. Sizing of a separator facility must be based upon maximum available flow to the separator and provision of a forty-five-minute retention time in the separator at that flow, with a minimum capacity of at least 100 gallons.
2. The oil/water separator must be covered with removable sections. Access and inspection covers, weighing not more than 30 lbs. and with suitable hand holds, are to be provided directly above inspection "tee" and oil/grit collection compartments.
3. Only wastewater from floor drains and covered parking areas must drain to the separator. The location and design must minimize or eliminate the possibility of stormwater reaching the separator -- areas over two hundred square feet open to rainfall must not drain to the separator. Sewage from restrooms and shower facilities must not drain to the separator.
4. The separator must be located within 20 feet of a driveway for access by a maintenance vehicle.
5. A sampling tee must be located on the outlet as shown on the Standard Details. Access to the separator must be maintained free for inspection and compliance determination sampling at all times.

6. The effluent discharged from any oil/water separator to the sanitary sewer must not exceed 100 parts per million total oil.
7. When pre-treatment is no longer required, the inlet and outlet pipes must be permanently plugged, the separation chambers pumped out, and the vault removed, or filled with compacted crushed rock or controlled density fill.

6.3 CONSTRUCTION PLANS

Sanitary sewer plans shall show both plan and profile views. Other utilities are to be shown in plan view and profile view, including crossing pipe approximate locations and depths graphically depicted on the profile along with the diameter and service called out.

Provide notes and on plans that refer to specific City Standard Details such as manholes, drop connections, side sewers, etc. All referenced standard details shall be included in the plans.

Plan and profile drawings shall show invert elevations of the main at the outlet and all inlets of each manhole, slope of the main and surface elevations of the manhole lid. In the profile view, the finish ground elevation over the pipe shall be shown. Stationing of side sewers from the downhill manhole is required.

In all cases where a line is to be placed in an easement, the easement is to be shown with measurement information to accurately lay it out prior to constructing the pipeline.

Upon completion of construction, the original plan shall be used to prepare a record drawing, certified by the design engineer and turned into the city inspector for review and approval. Prior to recording, proposed easements shall be adjusted to match any field changes occurred during construction to ensure that the easements are approximately centered over the pipeline.

The plans shall include Sewer Construction Notes. Refer to Appendix A of this Section.

6.4 CONSTRUCTION REQUIREMENTS

6.4.1 Survey Staking

Survey line and grade shall be required to establish correct horizontal and vertical placement of the sewer line. At a minimum, manholes and cleanouts shall be staked under the supervision of a professional land surveyor, as well as intermediate main line locations not to exceed 50 feet between surveyed points. Side sewer connection points to the main line sewer shall also be staked.

6.4.2 Trench Excavation

The maximum trench width between the foundation level and 12 inches above the pipe shall be 40 inches for pipe 15 inches or smaller inside diameter. For pipe 18 inches or larger the width shall be 1 1/2 times the inside diameter plus 18 inches. If the maximum trench width is exceeded the developer will be required to provide higher strength pipe

or higher class of bedding as determined by the project engineer.

The trench shall be kept free of water during pipe installation. Pump down the static water level to one foot below the excavation.

Trenching shall not exceed 100 feet in advance of pipe laying.

6.4.3 Pipe Bedding

Bedding for sewer main and side sewer pipe shall be pea gravel or washed sand. Install bedding to 6 inches below the bottom of the pipe and to 12 inches above the pipe.

Manholes shall be placed on a 6-inch to 12-inch bed of pea gravel.

6.4.3 Laying Sewer Pipe

Immediately upon beginning pipe installation, the developer shall place and secure a heavy-duty watertight plug in the sewer main at the new or existing manhole as directed by the inspector. The plug shall be secured with a chain and attached to the ladder inside the manhole. The plug shall remain in place throughout the project until such time as the sewer system is accepted by the city inspector. The Developer shall ensure watertight seal between the plug and pipe for the duration of the plug requirement. Should the plug become dislodged, the developer may be required to clean the sewer main and manholes downstream as determined by the City inspector. Developer is responsible to remove plug upon final acceptance of the sewer.

Pipe shall be laid with bells upslope and shall start from the lowest point. After placing a length of pipe in the trench, the spigot end shall be centered in the bell and the pipe forced home and brought to correct line and grade. The pipe shall be secured in place with pipe bedding tamped under it.

Every precaution must be taken to ensure foreign material does not enter the pipe. When pipe laying is not in progress, the open ends of the pipe must be closed by a watertight plug or other means approved by the City construction inspector. If water is in the trench when work resumes, the seal on the pipe must remain in place until the trench is completely pumped dry. No pipe may be laid in water, or when, in the opinion of the City construction inspector, trench conditions are unsuitable.

Installing sewer main pipe in fill areas may require additional treatment. The treatment may consist of the following: Compacting the backfill in six-inch layers, careful choice of backfill material, ductile iron pipe with locking mechanical joints, or other reasonable methods. Geotechnical evaluation of trench zone will be required to analyze the underlying soil conditions and make necessary recommendations.

Under no circumstances shall the developer be allowed to discharge flows from the new sewer main into the sewer system until or unless approved by the Director. The developer shall remove foreign material and any water within the new sewer before discharge is allowed to the existing sewer system.

6.4.4 Alignment Tolerance

Maximum deviation from planned grade shall not exceed a total of ½ inch. The developer shall make every effort to avoid bellies in the sewer pipe. Any inadvertent belly shall not exceed ½ inch, provided that it falls within a localized area not to exceed one pipe length.

Gravity pipe shall be installed in a straight alignment with uniform grade and pipe type between manholes. Variance from established alignment can be up to one inch per 100 lineal feet of pipe. Variation in the invert elevation between adjoining ends of pipe due to non-concentricity of joining surface shall not exceed one inch, with drop in the direction of flow only.

6.4.5 Connections to Existing

Connection of a new sewer main to an existing main shall be accomplished by pouring a concrete base and setting manhole sections. Refer to saddle manhole Standard Detail 612. The existing pipe shall not be cut until approval is received from the city inspector.

If connecting to an existing manhole, the Developer must carefully excavate adjacent to the existing manhole to prevent unbalanced loading. The manhole must be kept in operation at all times and the necessary precautions must be taken to prevent debris or other material from entering the sewer, including a tight pipeline bypass through the existing channel, if required by the city inspector.

The developer shall core drill an opening to match the size of pipe to be inserted. All connections to manholes shall be made with Kor-N-Seal boot or approved equal manhole adapters providing a transition from the manhole to pipe material and providing a watertight leak proof seal. All voids around manhole adapters shall be thoroughly grouted and sealed inside and outside of the manhole walls and installed in accordance with manufacturer recommendations.

Match manhole channels height to crown elevation of pipe. The concrete shelf shall be smoothly finished and warped evenly with a 2% slope to drain.

No pipe joint in PVC shall be placed within 10 feet of the outside face of the manhole.

Completed joints shall show no visible leakage and shall conform to the dimensional requirements of ASTM 478.

6.4.6 Manhole Installation

Manhole installation shall be as detailed on the construction drawings and in accordance with the standard details. Precast section with damaged joint surfaces, cracks, or damage shall not be installed.

Precast base sections shall be set on a 6-inch to 12-inch thickness bed of pea gravel. Before the precast base is set in place, the bedding material shall be carefully leveled to provide full bearing for the entire base section.

Precast riser and cone sections shall be set using the specified joint sealant or gasket. Joints between riser sections must be rubber gasket and mortared inside. Priming and preparation of surfaces and installation of jointing material shall be in strict conformance with the manufacturer's instructions.

Standard precast cones must provide eccentric reduction from 48 inches to 24 inches with a height not less than 18 inches and from 54 to 24 inches with a height not less than 24 inches.

Cone sections shall be rotated as necessary to position the access outside of the tire tracks of a traveled lane.

Grade rings shall be set in a full bed of cement grout. Grade ring thickness shall be 2-inches to 18-inches max. If set in paved areas, the casting shall be tilted to match the slope of the paved surface. Wood or deleterious material will not be allowed for adjustments.

Manholes placed in unpaved areas shall have a 12-inch wide by 2-inch minimum depth asphaltic ring around the external casting. Asphalt shall be placed on a firm and unyielding base.

Minimum fall across the manhole channel shall be 0.10 foot.

Channels shall be given a smooth finish, and channel landings shall be sloped to drain into the channels. Bottom and sides shall be given a trowels finish. Benches shall receive a light broom finish. Unless precast channel bases are used, notify the city inspector when channeling is scheduled and provide a copy of the concrete mix ticket.

Ladders shall be installed in base sections. Steps shall be installed in riser and taper section. The completed manhole shall have a continuous vertical ladder with equally spaced rungs.

6.4.7 Side Sewer Installation

Side sewer installation shall be in accordance with the Uniform Plumbing Code as adopted by the City of Monroe and these specifications and details. Only properly insured general developers or utility contractors licensed and bonded with the State of Washington shall perform side sewer installations within the public right-of-way or within easements.

The minimum grade shall be 2% and the maximum grade 100% (45 degrees), unless otherwise approved by the Director.

Taps shall not protrude into the main.

No connections from downspouts, gutters, footing drains, yard drains, or any other feature receiving or exposed to rain or groundwater shall be allowed to sewers.

All side sewers shall be pressure tested and inspected prior to backfilling. Any work that has been covered without inspection shall be uncovered to allow for inspection and

testing at the developer's own expense.

If a side sewer does not successfully pass an initial and subsequent re-test, the applicant may be subject to payment of an additional side sewer re-inspection fee per the City's Fees Resolution table.

6.4.8 Trenchless Installation

The use of trenchless methods for sewer pipe installations may be allowed. The use of trenchless methods will require special approval of the Director. Trenchless methods shall only be considered when other standard methods of construction are unnecessarily difficult or expensive. Any use of trenchless methods shall be at the developer's complete risk as to the ability to satisfactorily complete the utility installation in compliance with City standards. Methods that will be allowed include:

1. Horizontal Directional Drilling (HDD)
2. Microtunneling
3. Pipe Jacking
4. Pipe Bursting
5. Auger Boring
6. Pipe Ramming
7. Cured in Place Pipe (CIPP) for rehabilitation
8. Sliplining for rehabilitation

Casing pipe is used in microtunneling, pipe jacking, auger boring and pipe ramming applications and shall conform to all industry standards. Casing pipe that may be considered for Director review includes steel, High Density Polyethylene Pipe (HDPE) or Ductile Iron (DI). In addition, all DI pipe shall be restrained joint. Gasket restrained joints are not acceptable in boring, casing, or carrier pipe installations.

Casing spacers shall be used to support the carrier pipe inside the casing pipe. Casing spacers shall be equally spaced within the casing and shall be sized to center the carrier pipe within the casing pipe or as necessary to achieve desired slope. Casing spacers shall be as manufactured by Advanced Products and Systems Stainless Steel Band Casing Spacers, Model SSI, or Cascade Waterworks Manufacturing Company Stainless Steel Casing Spacer or approved equal.

The annular space between the carrier pipe and casing pipe shall be filled with sand that conforms with Section 9-03.1 (2)B of the WSDOT Specifications for Class 2 Fine Aggregated gradations. Other materials shall be approved by the Director prior to installation.

For Horizontal Directional Drilling (HDD) applications the carrier pipe is typically installed without a casing pipe. For HDD installations the carrier pipe shall be high density polyethylene pipe (HDPE).

All HDPE pipe shall have butt-fused joints completed in accordance with the manufacturer's recommendations as to equipment and technique by workers who are certified in the fusion process. HDPE pipe shall be butt-fused into the maximum available lengths prior to pulling the pipe into the directional drill hole. All interior butt

welds shall be reamed to provide the full unobstructed inside diameter of the HDPE pipe for sewer installations.

Pipe shall be installed to the lines and grades as shown on the plans and profiles. Because of the minimum pipe slopes and easement width, installation of the pipe shall be closely monitored to maintain the proper alignment.

The equipment used during the drilling operation shall be determined by the Developer for the approved trenchless method and meeting the requirements of the plans or specifications of this project.

Developer shall provide portable fluid (mud) tanks at both entry and exit points to contain all drilling fluids resulting from the drilling operation and is responsible for proper disposal of all drilling fluids and waste tailings offsite unless a suitable location is approved by the Director.

The entire length of the trenchless installation shall have a recorded profile upon completion. Developer shall furnish this information to the Director upon completion of the trenchless method operation.

6.5 MATERIALS

6.5.1 Sewer Pipe

The following material shall be used for mainline installation:

Sewer Material	Standard
Polyvinyl Chloride (PVC)	ASTM D 3034 SDR 35
Ductile Iron	ANSI/AWWA C151/A21.51, AWWA C116 ceramic epoxy lined Class 50
High Density Polyethylene Pipe (HDPE)	ASTM D3350 SDR 9 Force Mains ASTM D3350 SDR 11 Gravity Sewer
Cast in Place Pipe (CIPP)	ASTM F1216 or ASTM F1743
Polyvinyl Chloride (PVC) pressure pipe C-900 (4” – 12” diameter) C-905 (12” – 24” diameter)	ANSI/AWWA C-900 & C-905, DR 18

In general, ductile iron shall be used:

1. When cover is less than 3 feet
2. When depth exceeds 16 feet
3. Through casing pipes

C900 or C905 may be used at depths between 3.0’ and 16’ of cover.

HDPE pipe may be used:

1. In areas of fill
2. For sewer force mains

3. Steep slopes
4. Stream crossings
5. Within casings

CIPP may be used for rehabilitating existing sewer lines if the sewer line will not be upsized in the future and upon approval by the Director.

Force mains shall be lined with Protecto 401 ceramic epoxy or an approved equal lining, restrained joint Ductile Iron (Class 53), or High Density Polyethylene (HDPE) SDR 9. Testing of force mains shall be in accordance with pressure testing for water mains.

6.5.2 Manholes

Manholes shall be constructed of pre-cast units, in accordance with Standard Plans.

Joints between pre-cast manhole sections shall be rubber gasketed conforming to ASTM C443.

All pre-cast concrete shall be Class 4000. Manhole channels shall be Class 3000 concrete. Concrete blocks or concrete (masonry) rings may be used for adjustment of the casting to final street grade. No wood or other deleterious material shall be used for permanent casting adjustment.

Standard precast riser sections shall consist of circular sections in standard nominal inside diameter of 48 inches and shall be in accordance with ASTM C478. Minimum height of a riser section shall be 1 foot. The base sections and risers shall be arranged so no pipes pass through manhole joints.

Standard precast cones shall provide reduction from 48 inches to 24 inches with height of not less than 18 inches and from 54 inches to 24 inches with height of not less than 24 inches.

Use of standard flat slab covers is discouraged.

All manholes over three feet in height shall be provided with steps as specified in Standard Plan No. 606. Polypropylene steps shall be made of copolymer polypropylene superior in its resistance to corrosiveness meeting the requirements of ASTM D4101 and shall completely encapsulate a deformed ½-inch steel reinforcing rod, conforming to ASTM A615, Grade 60. Steps shall be Lane International Corporation Manhole Step, or approved equal. Polypropylene steps shall be factory installed in complete accordance with the manufacturer's instructions. This shall be accomplished by pre-drilling two parallel 1-inch holes, 3-3/4 inch deep and 12 inches on center in the cured concrete base, riser and taper sections of the manhole. The insertion ends of the step shall be fully coated with non-shrink epoxy grout then driven into the holes to the prescribed depth. In no case shall the pre-driven hole be allowed to penetrate through the wall of the manhole section.

6.5.3 Cleanouts (Standard Plan No. 611)

Cleanouts, their pipe and fittings shall be the same gasketed material as the sewer pipe.

Cleanout frame and cover shall be locking type and made of superior quality cast iron. The iron shall be of such character as to make castings that will be tough, strong, sound and of even grain and shall conform to the requirements of ASTM Designation A48, Class 30. Cleanout frames and covers shall be of uniform quality, free from blow holes, porosity shrinkage, distortion, cavities, cracks or other defects. They shall be smooth and well cleaned and continuously machined to prevent rocking and rattling. Welded or caulked repairs shall not be permitted. Covers shall be easily removable.

6.5.4 Joints

Joint material shall meet the recommendations of the pipe or manhole manufacturer.

Where joints must be made between pipes with a mismatched wall thickness, the developer shall use flexible gasketed coupling, adapter or coupling-adapter to make a watertight joint. Couplings shall be those manufactured by "Romac", "Smith Blair", or approved equal for reinforced pipes and strongback "Fernco" or approved equal for non-reinforced pipes.

Flexible pipe-to-manhole connectors shall conform to the requirements of ASTM C923.

6.6 SEWER ACCEPTANCE

6.6.1 Cleaning

The developer is required to clean and flush the new sewer prior to testing. The flushing shall be accomplished using a jetting device sufficient to develop cleansing velocities in the pipe barrel. The flushing water shall not be allowed to enter the existing sewer system and shall be removed from the new sewer by vactor-type equipment.

6.6.2 Testing

All sanitary sewer main installations shall be tested in accordance with Section 7-17.3(2) of the WSDOT Standard Specifications. An infiltration test is required for sewer pipe installed within the ground water table.

All side sewer installations shall be tested using either air or water for a 15-minute duration with no loss. An inflatable rubber ball shall be installed at the test tee or property line clean out. If water is used, the line shall be filled with clean water to the building clean out and achieve a hydrostatic head of at least 6 feet above the side sewer pipe.

6.6.3 Television Inspection

Final acceptance of the project or release maintenance and performance bonds will not be issued until sewer is inspected by Closed Circuit Television (CCTV) camera and footage is provided to the Director in DVD or other approved electronic media format.

The CCTV camera must have zoom capability and a swivel head lens capable of turning and rotating 180 degrees to provide inspection of lateral connections. Each individual

sewer main inspection, from manhole to manhole, must be recorded on one digital file. The Director will accept multiple digital files for a single pipe only when the pipe reach cannot be recorded to one digital file due to extreme pipe length or obstructions in the pipe. The Director will not accept multiple storm main inspections recorded on a single digital file.

Dirty, blurry, foggy, submerged, or otherwise non-viewable inspections will not be accepted.

Prior to performing CCTV inspection, the Developer must have completed the manhole channeling, grouting, and trench backfill.

At least two days prior to the inspection, the Developer must contact the city inspector when and which lines will be inspected. Immediately preceding the CCTV inspection, water with dye must be poured into the system until visually seen discharging from the lowest point to be inspected.

The information listed below must be electronically generated and displayed on the CCTV footage at the beginning of each inspection. This data must be continuously updated and displayed on the CCTV footage during the inspection.

1. Date of inspection
2. Construction company name
3. Operator name
4. Upstream catch basin number to downstream catch basin number
5. Direction of inspection (upstream or downstream)
6. Pipe material and size

A 1-inch ball must be placed immediately in front of the camera, mounted such that the ball is visible and contacts the pipe bottom at all times. CCTV inspection cannot be paused once it begins. Only continuous inspections are acceptable. Pipe joints, manholes, and side sewer connections must be thoroughly inspected by panning the entire connection, including manhole risers. Zooming inspection of all side sewer connections is required.

The Developer must bear all costs incurred in correcting any deficiencies found during the CCTV inspection, including the cost of any additional CCTV inspections that may be required to verify that deficiencies have been corrected.

6.6.4 Required Documentation

The following steps must be completed before the improvements will be accepted and performance bond released:

1. All easements must be reviewed, approved, and recorded.
2. The City construction inspector must have received, reviewed, and approved the record drawings.
3. The City construction inspector must have received, reviewed, and approved the sanitary sewer Closed Circuit Television Inspection.
4. Receipt of a satisfactory maintenance bond.

5. Bill of Sale

Upon completion of the work, the developer shall be required to furnish the Director with a written guarantee (financial security) covering all materials and workmanship for a period of two years after the date of final acceptance, or recording of the final plat, whichever comes later, and the developer shall make all necessary repairs during that period at his own expense if such repairs are necessitated as the result of furnishing poor materials and/or workmanship.

The Developer shall provide the City with a Bill of Sale for all portions of the system that will become the property of the City.

APPENDIX A – SEWER CONSTRUCTION NOTES

The following standard notes are required on all Sanitary Sewer Plans:

A. All work and materials shall conform to the City of Monroe Public Works Design, Construction and Operations Standards, and the Washington State Standard Specifications for Road, Bridge, and Municipal Construction, and the latest issue or revision of the Criteria for Sewage Work Design (Orange Book) published by the Washington State Department of Ecology.

B. All approvals and permits required shall be obtained by the developer prior to the start of construction.

C. A preconstruction meeting shall be held with the City of Monroe Public Works Department prior to the start of construction.

D. It is the responsibility of the developer to have a copy of the approved plans at the construction site at all times.

E. Any changes to the design shall first be reviewed and approved by the Director.

F. All sewer mains shall be staked in the field under the supervision of a licensed land surveyor.

G. Approximate locations of existing utilities have been obtained from available records and are shown for convenience. The developer shall be responsible for verification of locations and to avoid damage to any additional utilities not shown. If conflicts with existing utilities arise during construction, the developer shall notify the public works inspector and any changes required shall be approved by the Director prior to commencement of related construction on the project.

H. Sewer main crossings with other utilities must be installed to provide a minimum of one (1) foot separation, measured at the two closest edges of the pipes, unless otherwise approved by the Director. For crossings with potable water lines, the sewer crossing shall conform to the requirements found in the Criteria for Sewage Works Design, Section C1-9.

I. The city inspector shall be contacted a minimum of 48 hours to schedule a tap or connection to an existing sanitary sewer main. The inspector shall be present at the time of the tap or connection.

J. Precast manholes shall meet the requirements of ASTM C 478, and shall be Type I – 48” nominal inside diameter unless otherwise noted on the plans. Joints shall be rubber gasketed conforming to ASTM C 443 and shall be grouted from the inside. Lift holes shall be grouted from the outside and inside of the manhole.

K. The manhole ladder and cone must be rotated so the lid is outside of the roadway wheel path and the ladder is not over manhole channel.

L. Side sewer pipe shall be PVC ASTM 3034 SDR 35 with flexible gasketed joints. Side sewer connections shall be made by a tap to an existing main per the Standard Details, or a wye tee from a new main connected above the springline of the pipe. Straight tees are not permitted in new sewer main construction. Taps shall not protrude into the sewer main.

M. No part of the sanitary sewer system shall be covered, concealed, or put into use until it has been tested, inspected, and approved by the city inspector.

N. Side sewers shall be extended to the property line, or beyond the utility easement line, whichever is farther. Each side sewer shall have a 2” x 4” wood marker at the termination of the stub. The marker shall extend above the finish grade, painted white and stenciled SEWER with 2” high lettering. Depth of bury

shall be noted.

O. All sewer main and laterals shall be cleaned and free from all silt, debris and staining prior to final inspection and pressure testing.

P. Pre air pressure testing may be conducted as the developer desires, but final air pressure testing acceptance will not be approved until all dry utilities have been installed and backfilled. The sewer final inspection pressure test shall be conducted and approved prior to any street restoration.

Q. Visual inspection shall include closed circuit television (CCTV). Prior to videoing of the main, water shall be flowed until it comes out the lowest portion of the system being videoed. A copy of the video shall be provided to the inspector in an approved media format. A paper copy of the video inspection noting any pipe bellies, joint deficiencies will also be required. The CCTV report and video must be reviewed and approved by the inspector before acceptance of the new sewer is given.

6.7 STANDARD SANITARY SEWER DRAWINGS

Drawing #	Description
601	Typical Side Sewer Layout
602	Gravity Sewer Service Connection
603	Sanitary Sewer/Storm Drain Clean Out
604	Type I Manhole
605	Type II Manhole
606	Type III Manhole
607	Steps and Ladder
608	Manhole Ring and Cover
609	Inside Drop
610	Casing
611	Typical Connection to Existing Sewer Main
612	Saddle Manhole
613	Single Home Sewer Pump System

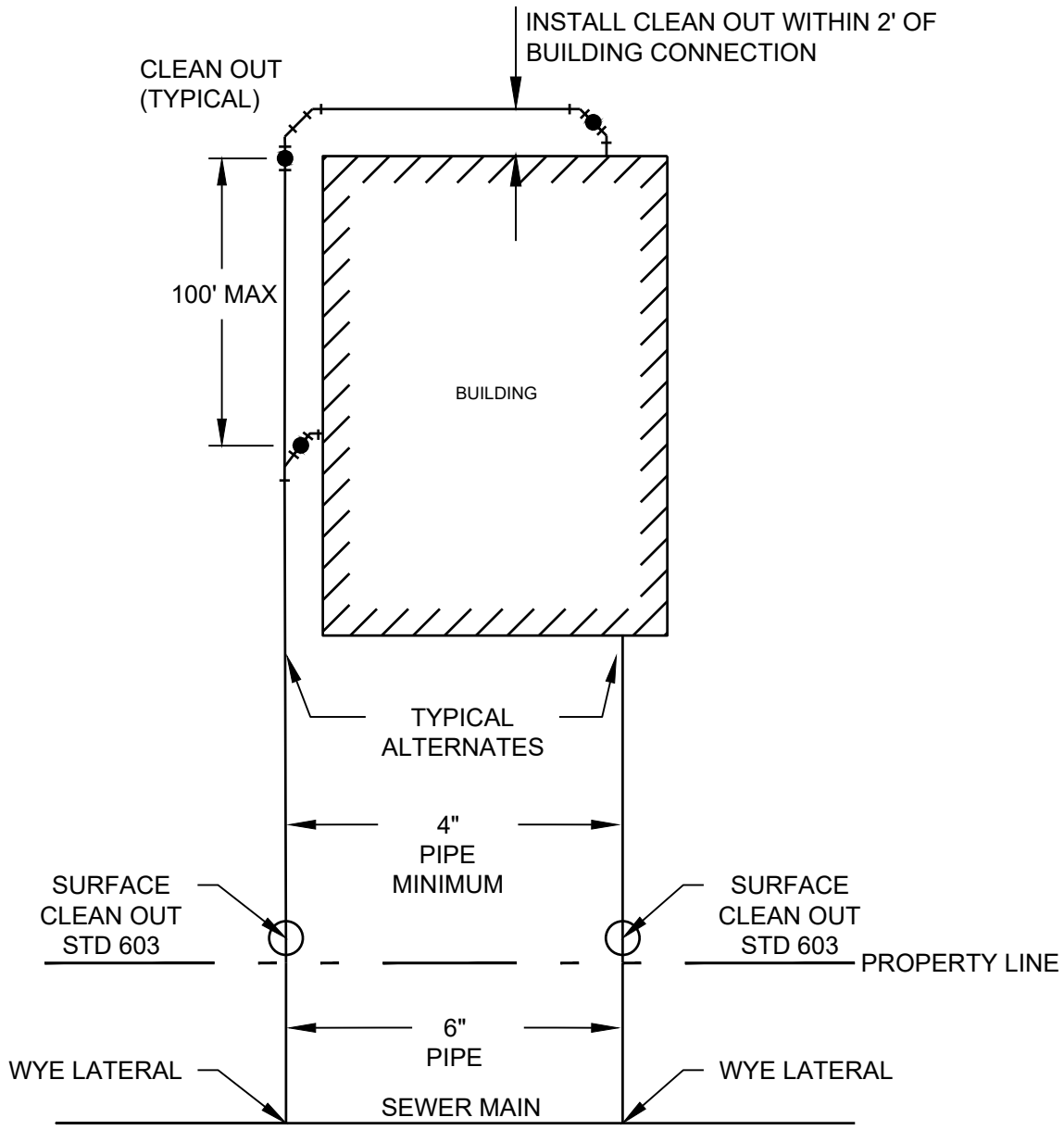

NOTES

1. INSTALL SEWER MAIN CONNECTION AND CLEANOUT PER STANDARD DRAWING 602 AND 603.
2. ALL TEE CONNECTIONS SHALL BE WITH WYES. STRAIGHT TEES ARE NOT PERMITTED.
3. ALLOWABLE GRADES ARE 2% (¼"/FT) MINIMUM TO 100% (FT/FT) MAXIMUM.
4. INSTALL 6" MINIMUM PIPE SIZE FROM THE MAIN LINE TAP TO THE PROPERTY LINE.
5. BED SIDE SEWERS WITH PEA GRAVEL 12" ABOVE AND 6" BELOW PIPE.
6. FOR NEW DEVELOPMENT EXTEND SIDE SEWER STUB 10' ONTO PROPERTY.

MONROE WASHINGTON

DESCRIPTION

TYPICAL SIDE SEWER LAYOUT

DESIGNATION

601

SCALE

NOT TO SCALE

REVISED

FEB 1, 2024

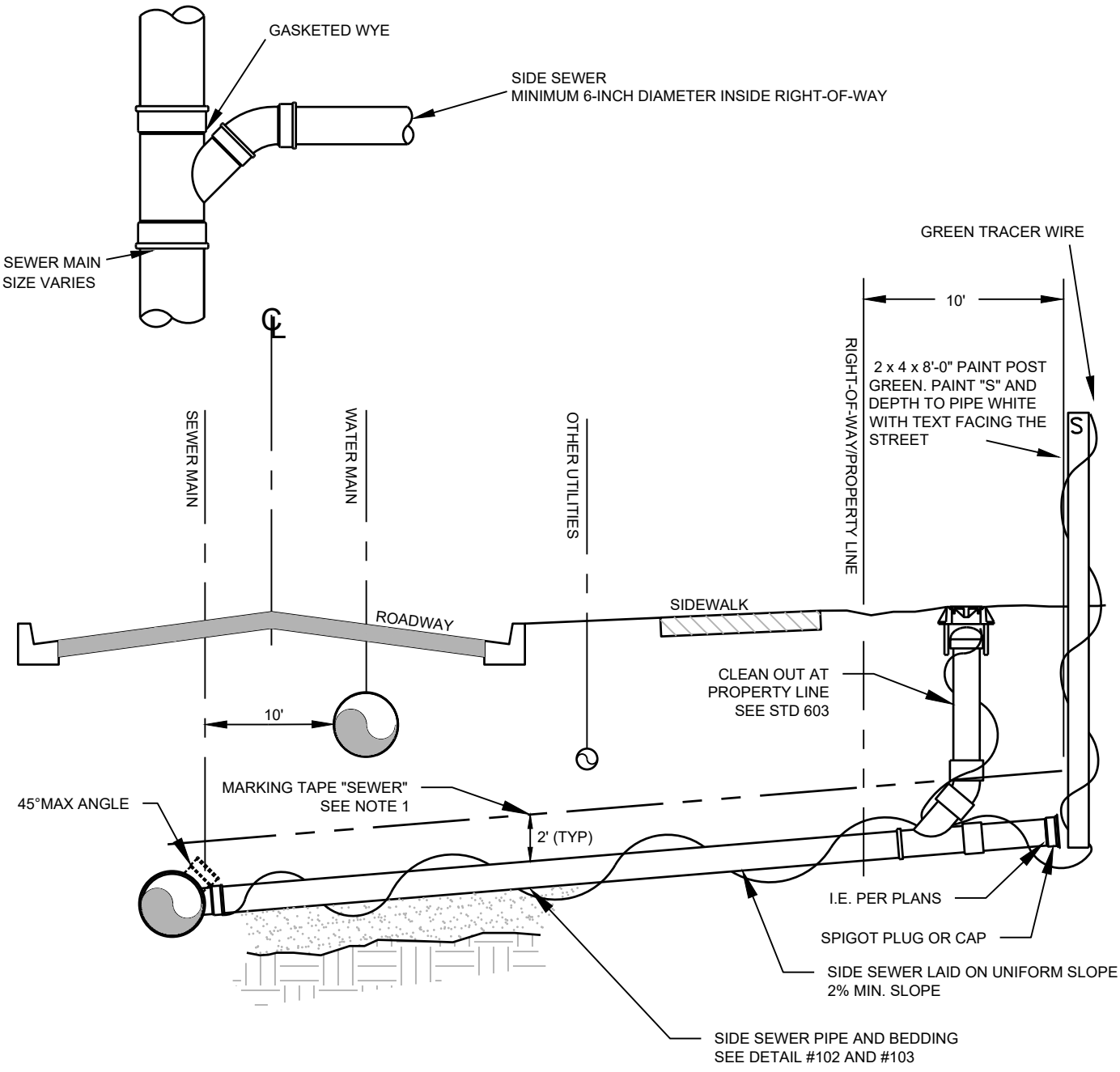

NOTES

1. INSTALL SEWER MARKING TAPE 2' ABOVE SEWER FROM MAIN TO HOUSE.

MONROE WASHINGTON

DESCRIPTION

GRAVITY SEWER SVC CONNECTION

DESIGNATION

602

SCALE

NOT TO SCALE

REVISED

FEB 1, 2024

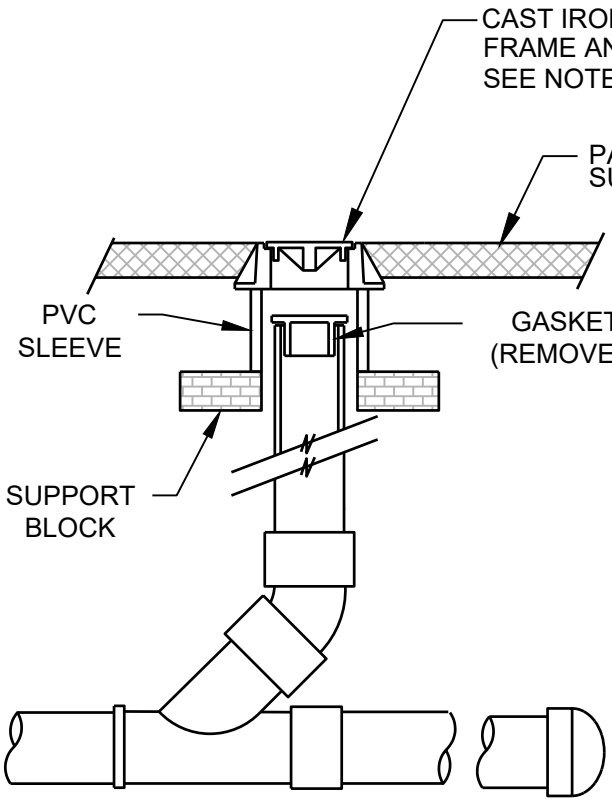

PAVED AREAS

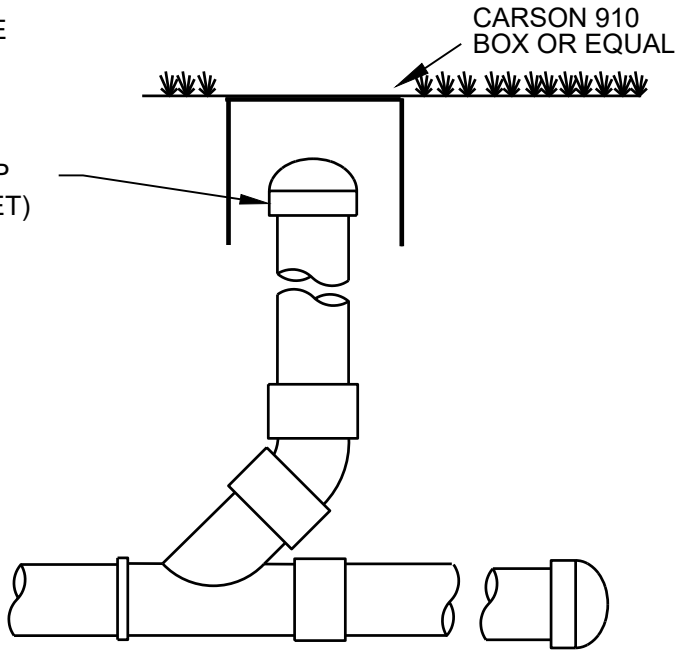

UNPAVED AREAS

NOTES

1. PIPE AND FITTINGS SHALL BE PVC ASTM 3034 (SDR 35).
2. A GASKETED WYE MUST BE INSTALLED. STRAIGHT TEES ARE NOT ACCEPTABLE.
3. CASTING SHALL BE 12" Ø CAST IRON LOCKING FRAME.
4. CLEAN OUTS IN ALLEYWAYS AND DRIVEWAYS SHALL HAVE A 2'X2'X6" ASPHALT OR CONCRETE PAD AROUND CLEAN OUT FRAME AND COVER.

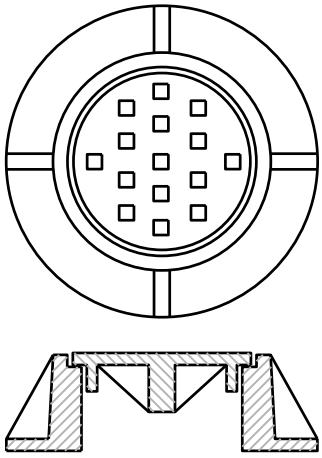

CAST IRON
LOCKING
FRAME AND COVER

MONROE WASHINGTON

DESCRIPTION

SANITARY SEWER/STORM DRAIN CLEAN OUT

DESIGNATION

603

SCALE

NOT TO SCALE

REVISED

FEB 1, 2024

NOTES

1. CONSTRUCT IN ACCORDANCE WITH AASHTO M-199 (ASTM C-478).
2. ALL REINFORCED CAST IN PLACE CONCRETE SHALL BE CLASS 4000. NON-REINFORCED CONCRETE IN CHANNEL AND SHELF SHALL BE CLASS 3000. ALL PRECAST CONCRETE SHALL BE CLASS 4000.
3. PRECAST BASES SHALL BE FURNISHED WITH CUTOUTS. FLEXIBLE PIPE TO MANHOLE CONNECTORS (ASTM C923) ARE REQUIRED. CUTOUT DIAMETERS MUST MEET THE FLEXIBLE CONNECTOR'S MANUFACTURERS SPECIFICATIONS.
4. ALL BASE REINFORCING STEEL SHALL HAVE A MINIMUM YIELD STRENGTH OF 60,000 PSI AND BE PLACED IN THE UPPER HALF OF THE BASE WITH 1" MINIMUM CLEARANCE.
5. MINIMUM DISTANCE BETWEEN HOLES IS 8"(MEASURED ON THE INSIDE OF THE MANHOLE)
6. MANHOLE SIZE DEPENDS ON SIZE, LOCATION, AND NUMBER OF HOLES FOR PIPES. MANHOLE DESIGN AND SIZE SHALL BE APPROVEDAND WARRANTED BY THE MANHOLE SUPPLIER.
7. FOR HEIGHTS OVER 25' MANHOLE BASE SLAB SHALL BE DESIGNED BY A STRUCTURAL ENGINEER.
8. PIPE CONNECTIONS, MANHOLE SECTIONS, AND MANHOLE RISERS SHALL ALL BE GROUTED INSIDE AND OUT AND BE WATER TIGHT.
9. MANHOLE CASTINGS AND LIDS SHALL BE POSITIONED OUT OF VEHICULAR WHEEL PATH AS MUCH AS PRACTICABLE.

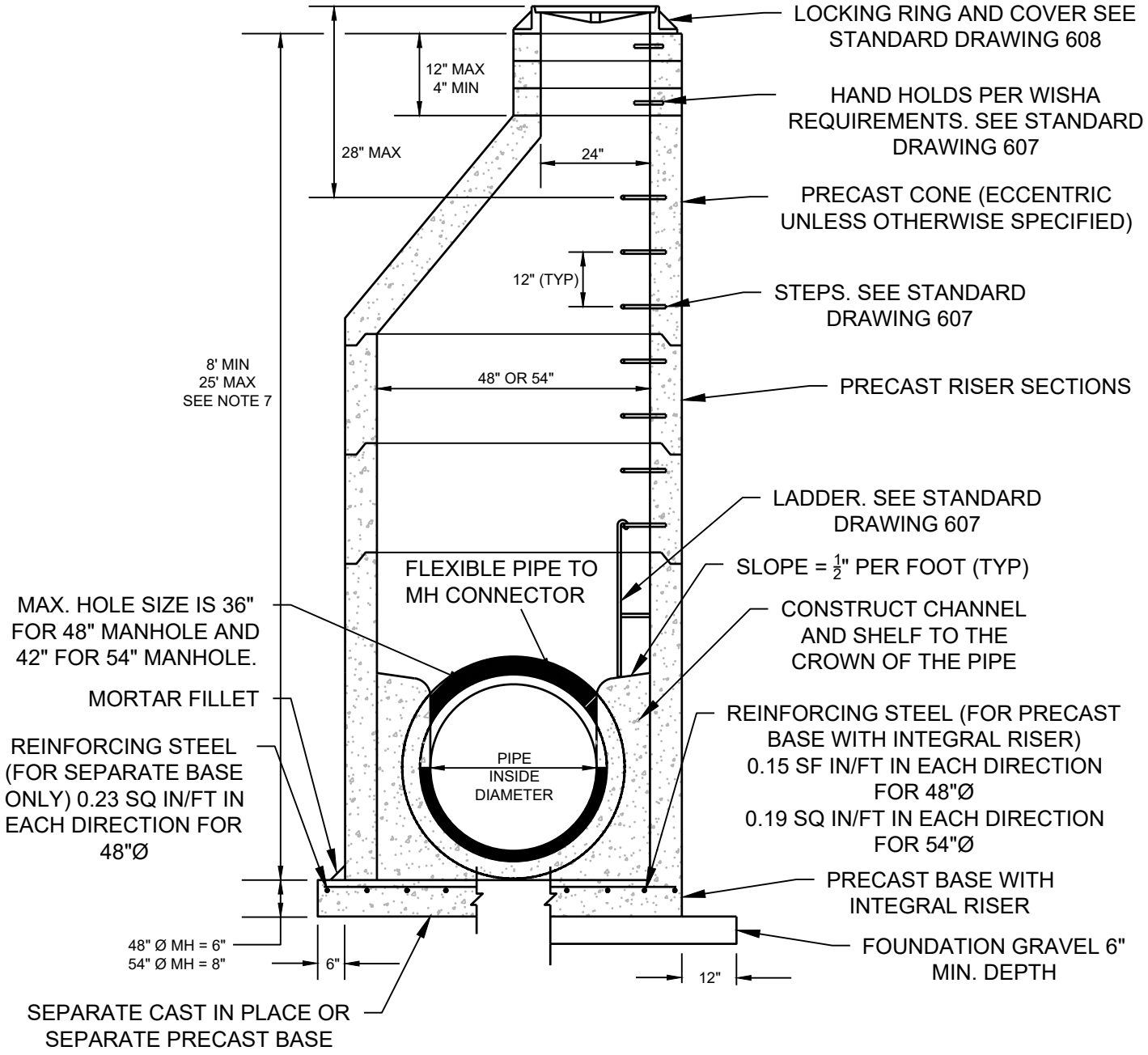

MONROE WASHINGTON

DESCRIPTION

TYPE I MANHOLE 48" & 54"

DESIGNATION

604

SCALE

NOT TO SCALE

REVISED

FEB 1, 2024

NOTES

1. CONSTRUCT IN ACCORDANCE WITH AASHTO M-199 (ASTM C-478).
2. ALL REINFORCED CAST IN PLACE CONCRETE SHALL BE CLASS 4000. NON-REINFORCED CONCRETE IN CHANNEL AND SHELF SHALL BE CLASS 3000. ALL PRECAST CONCRETE SHALL BE CLASS 4000.
3. PRECAST BASES SHALL BE FURNISHED WITH CUTOUTS. FLEXIBLE PIPE TO MANHOLE CONNECTORS (ASTM C923) ARE REQUIRED. CUTOUT DIAMETERS MUST MEET THE FLEXIBLE CONNECTOR'S MANUFACTURERS SPECIFICATIONS.
4. ALL BASE REINFORCING STEEL SHALL HAVE A MINIMUM YIELD STRENGTH OF 60,000 PSI AND BE PLACED IN THE UPPER HALF OF THE BASE WITH 1" MINIMUM CLEARANCE.
5. MINIMUM DISTANCE BETWEEN HOLES IS 8"(MEASURED ON THE INSIDE OF THE MANHOLE)
6. MANHOLE SIZE DEPENDS ON SIZE, LOCATION, AND NUMBER OF HOLES FOR PIPES. MANHOLE DESIGN AND SIZE SHALL BE APPROVEDAND WARRANTED BY THE MANHOLE SUPPLIER.
7. FOR HEIGHTS OVER 25' MANHOLE BASE SLAB SHALL BE DESIGNED BY A STRUCTURAL ENGINEER.
8. PIPE CONNECTIONS, MANHOLE SECTIONS, AND MANHOLE RISERS SHALL ALL BE GROUTED INSIDE AND OUT AND BE WATER TIGHT.
9. MANHOLE CASTINGS AND LIDS SHALL BE POSITIONED OUT OF VEHICULAR WHEEL PATH AS MUCH AS PRACTICABLE.

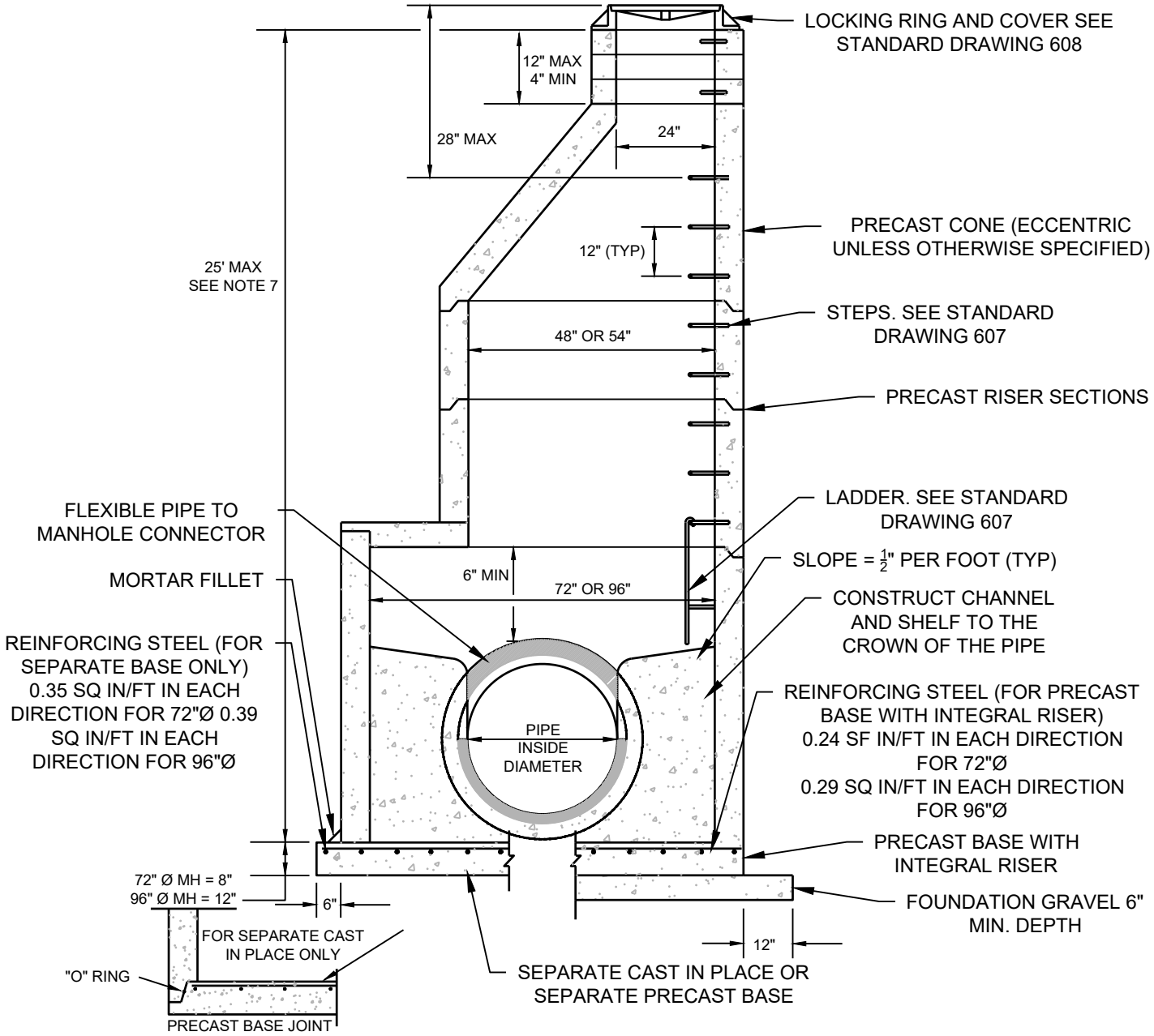

MONROE WASHINGTON

DESCRIPTION

TYPE II MANHOLE 72" & 96"

DESIGNATION

605

SCALE

NOT TO SCALE

REVISED

FEB 1, 2024

NOTES

1. CONSTRUCT IN ACCORDANCE WITH AASHTO M-199 (ASTM C-478).
2. ALL REINFORCED CAST IN PLACE CONCRETE SHALL BE CLASS 4000. NON-REINFORCED CONCRETE IN CHANNEL AND SHELF SHALL BE CLASS 3000. ALL PRECAST CONCRETE SHALL BE CLASS 4000.
3. PRECAST BASES SHALL BE FURNISHED WITH CUTOUTS. FLEXIBLE PIPE TO MANHOLE CONNECTORS (ASTM C923) ARE REQUIRED. CUTOUT DIAMETERS MUST MEET THE FLEXIBLE CONNECTOR'S MANUFACTURERS SPECIFICATIONS.
4. ALL BASE REINFORCING STEEL SHALL HAVE A MINIMUM YIELD STRENGTH OF 60,000 PSI AND BE PLACED IN THE UPPER HALF OF THE BASE WITH 1" MINIMUM CLEARANCE.
5. MINIMUM DISTANCE BETWEEN HOLES IS 8"(MEASURED ON THE INSIDE OF THE MANHOLE)
6. MANHOLE SIZE DEPENDS ON SIZE, LOCATION, AND NUMBER OF HOLES FOR PIPES. MANHOLE DESIGN AND SIZE SHALL BE APPROVEDAND WARRANTED BY THE MANHOLE SUPPLIER.
7. FOR HEIGHTS OVER 25' MANHOLE BASE SLAB SHALL BE DESIGNED BY A STRUCTURAL ENGINEER.
8. PIPE CONNECTIONS, MANHOLE SECTIONS, AND MANHOLE RISERS SHALL ALL BE GROUTED INSIDE AND OUT AND BE WATER TIGHT.
9. MANHOLE CASTINGS AND LIDS SHALL BE POSITIONED OUT OF VEHICULAR WHEEL PATH AS MUCH AS PRACTICABLE.

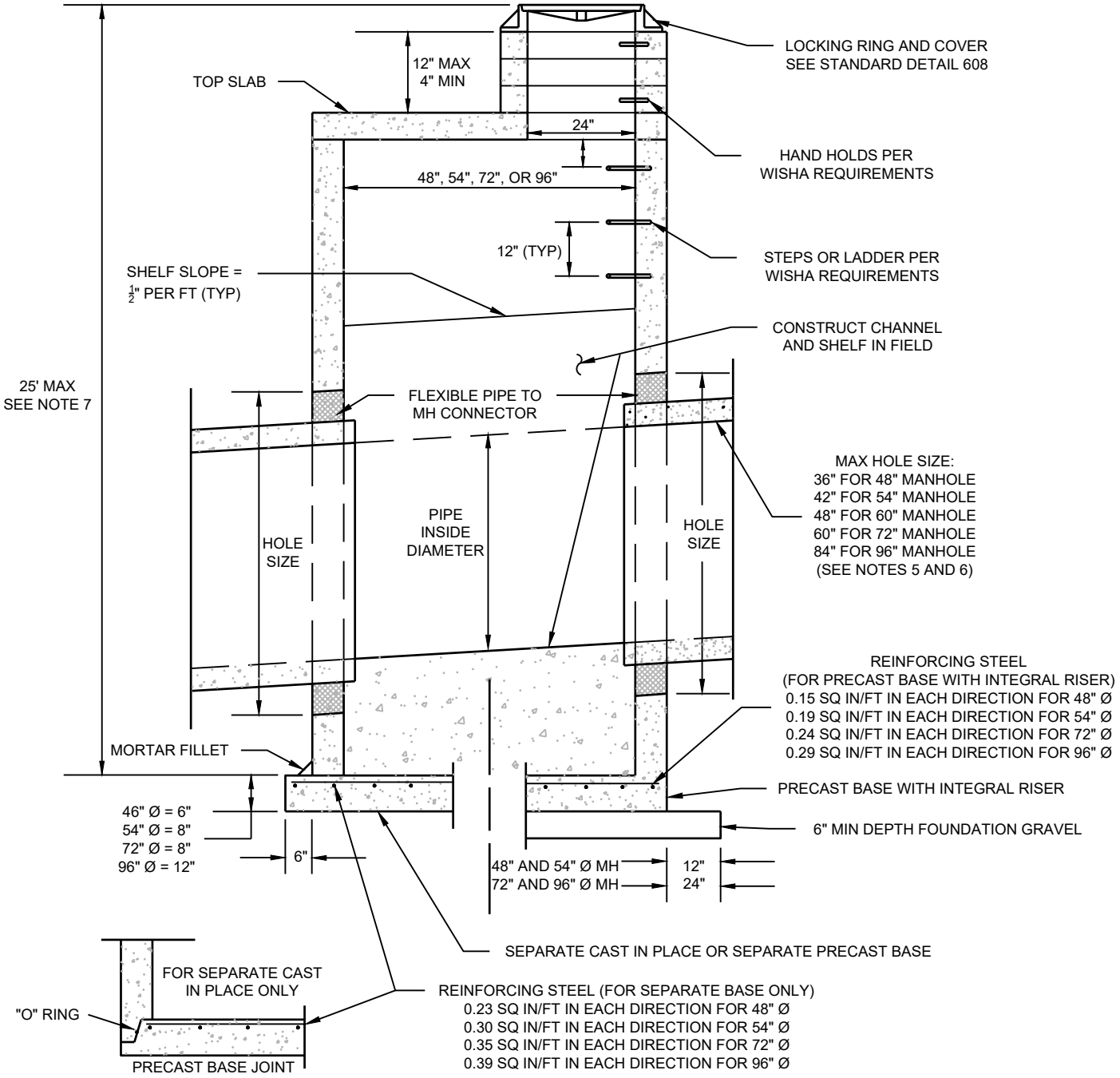

MONROE WASHINGTON

DESCRIPTION

TYPE 3 MANHOLE (48", 54", 60", 72", 96")

DESIGNATION

606

SCALE

NOT TO SCALE

REVISED

FEB 1, 2024

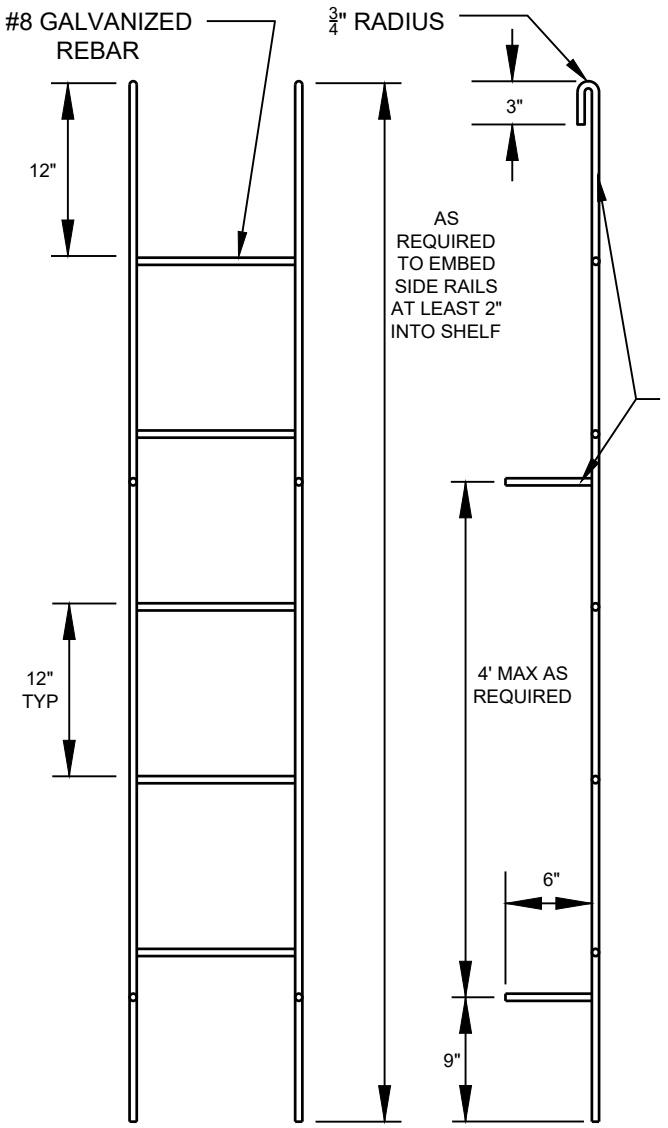

LADDER

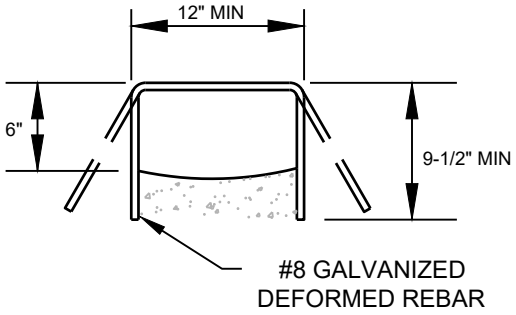

MANHOLE STEP

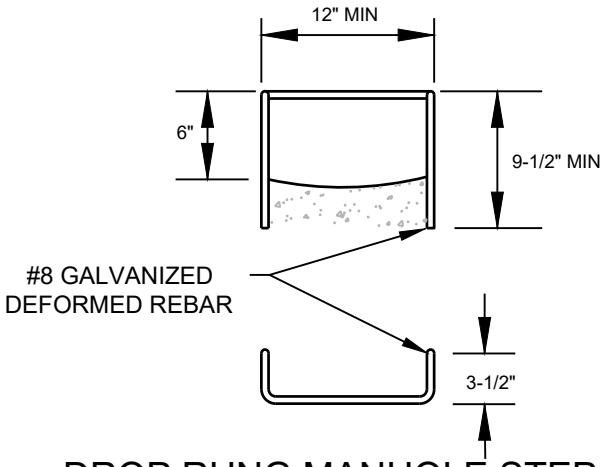

DROP RUNG MANHOLE STEP

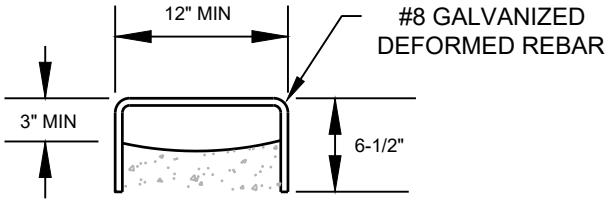

HANDHOLD

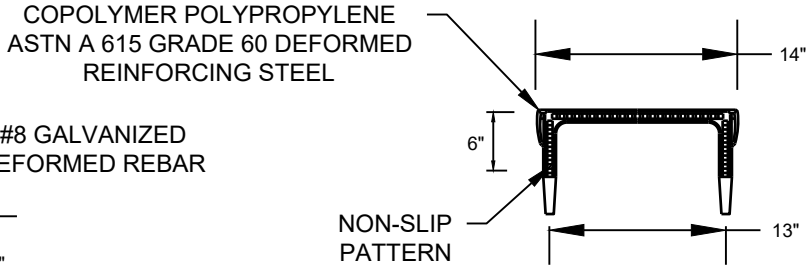

POLYPROPYLENE STEP

MONROE WASHINGTON

DESCRIPTION

STEPS AND LADDER

DESIGNATION

607

SCALE

NOT TO SCALE

REVISED

FEB 1, 2024

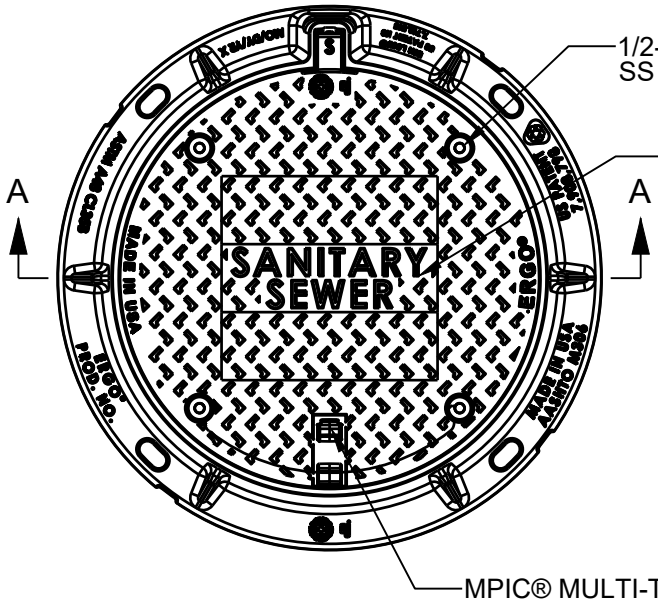

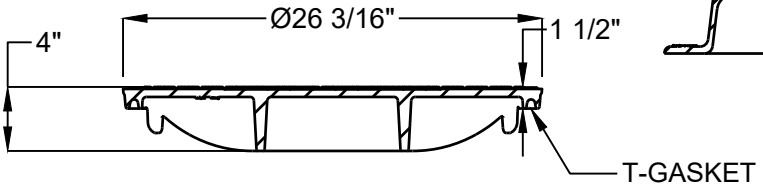

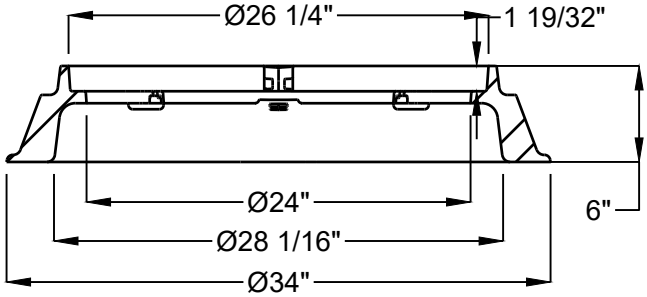

SECTION A-A

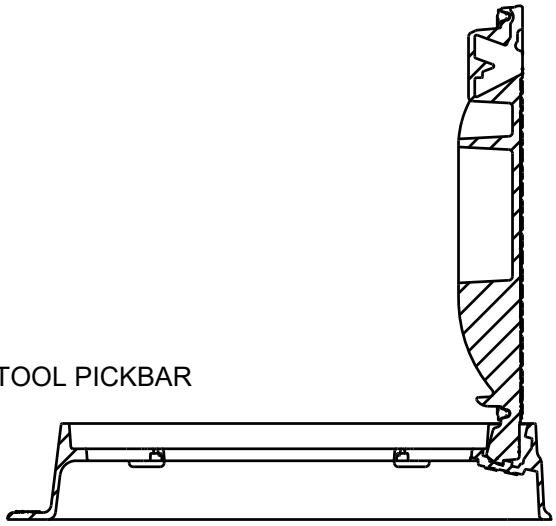

SAFETY LOCK@90°

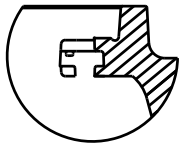

SECTION VIEW
EON LOCK

FULLY OPENED@120°

NOTES

1. MANHOLE RINGS SHALL BE GRAY IRON CONFORMING TO THE REQUIREMENTS OF AASHTO M 105, CL35B.
2. MANHOLE COVER TO BE DUCTILE IRON CONFORMING TO ASTM A536, GR 80-55-06.
3. LOCKING COVER TO BE USED AT ALL LOCATIONS. THE LID SHALL BE LOCKED DOWN WITH 4 1/2-13 STAINLESS STEEL BOLTS.
4. ALL UNDER CASTINGS TO BE GROUTED TO THE RISER SECTION AND ALSO EXTERNALLY TO HOLD CASTINGS SECURELY IN PLACE.
5. MANHOLE RING AND COVER SHALL BE EAST JORDAN PRODUCT 00104049L02.

MONROE WASHINGTON

DESCRIPTION

MANHOLE RING AND COVER

DESIGNATION

608

SCALE

NOT TO SCALE

REVISED

FEB 1, 2024

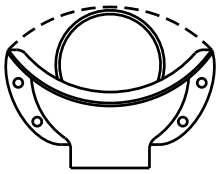

DROP BOWL
MOUNTING

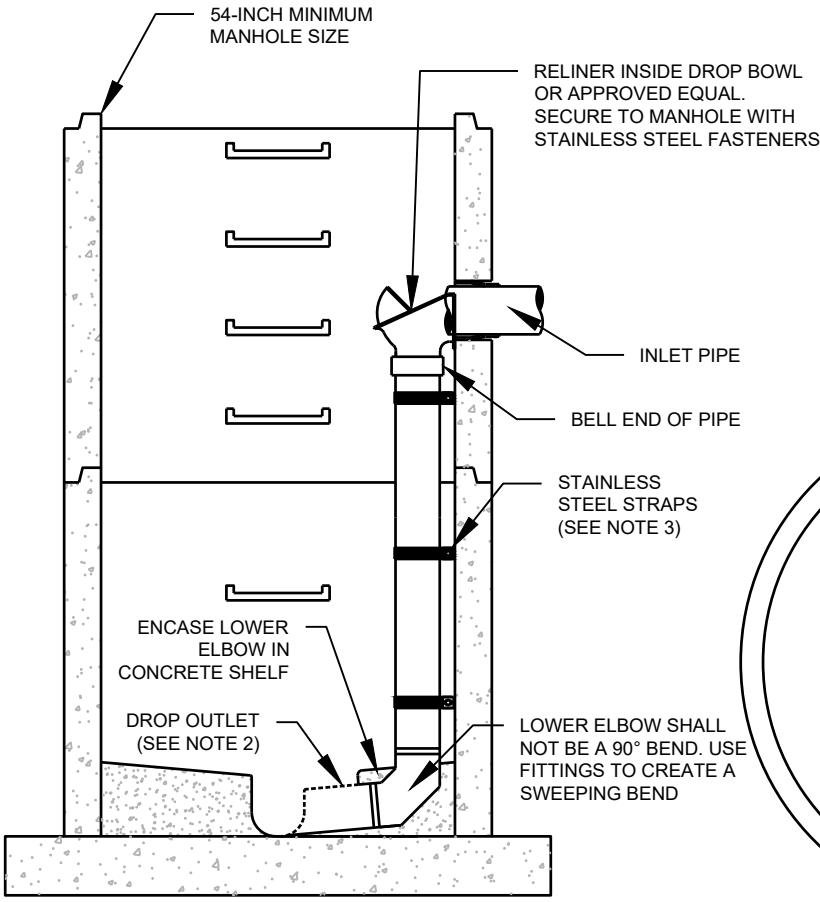

PROFILE VIEW

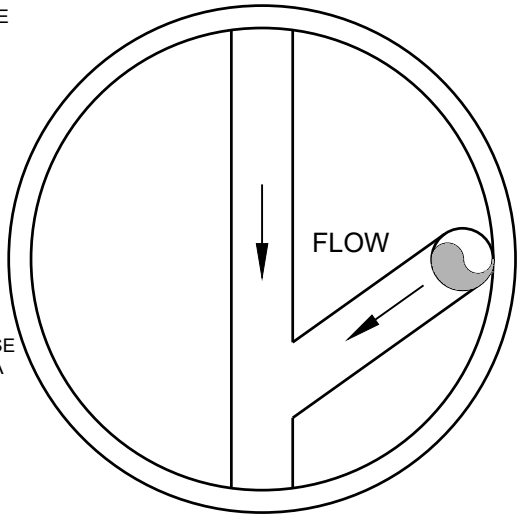

PLAN VIEW

NOTES

1. DROP BOWL BOLTS TO STRUCTURE WALL INDEPENDENT OF THE INLET PIPE. DO NOT SECURE BOWL TO INLET PIPE.
2. DROP OUTLET TO DISCHARGE TO A CHANNEL INSIDE THE MANHOLE.
3. STAINLESS STEEL STRAPS SHALL BE ATTACHED TO THE STRUCTURE WALL WITH STAINLESS STEEL FASTENERS AT 4-FOOT INTERVALS. THERE SHALL BE A MINIMUM OF TWO STAINLESS STEEL STRAPS.
4. USE SAND COLLAR FOR SMOOTH BORE PIPES.

MONROE WASHINGTON

DESCRIPTION
INSIDE DROP

DESIGNATION
609

SCALE
NOT TO SCALE

REVISED
FEB 1, 2024

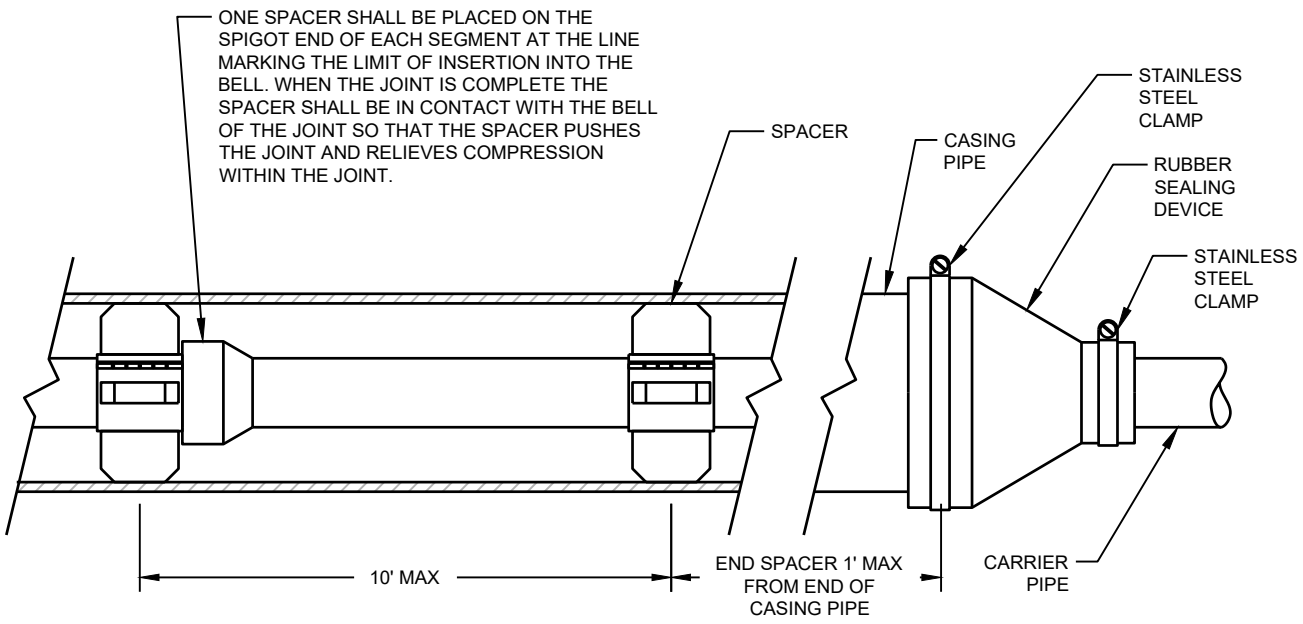

CARRIER PIPE DIAMETER	4"	6"	8"	10"	12"
CASING DIAMETER	10"	12"	14"	16"	20"
STEEL CASING THICKNESS	0.25"	0.25"	0.25"	0.25"	0.25"
SPACER BAND WIDTH	8"	8"	8"	8"	8"

NOTES:

1. CARRIER PIPE WILL BE PRESSURE TESTED BY CONTRACTOR AND CCTV INSPECTED BY CITY CREWS BEFORE SEALING CARRIER PIPE.
2. CARRIER SKIDS SHALL BE CENTER POSITIONING TYPE.
3. MINIMUM RUNNER WIDTH SHALL BE 2".
4. RUNNER HEIGHT SHALL BE SIZED TO PROVIDE:
   - 4.1. MINIMUM 0.75" BETWEEN CARRIER PIPE BELL AND CASING PIPE WALL AT ALL TIMES.
   - 4.2. MINIMUM 1" CLEARANCE BETWEEN RUNNERS AND TIP OF CASING WALL TO PREVENT JAMMING DURING INSTALLATION.
5. STEEL CASING DIAMETERS ARE OUTSIDE DIAMETER FOR 16" AND LARGER.
6. SPACER BAND WIDTH SHALL BE 12" FOR CARRIER PIPES THAT ARE 36" DIAMETER OR GREATER.
7. FOR STEEL CASING, PROVIDE SHOP APPLIED ANTI-CORROSIVE COATING ON CASING EXTERIOR CONFORMING TO AWWA C210. MINIMUM COATING THICKNESS 16 MILS DFT (DO NOT EXCEED MANUFACTURER'S MAXIMUM THICKNESS). PRODUCT SHALL BE EQUAL TO TNEMEC HI-BUILD TNEME-TAR SERIES 46H-413.

MONROE WASHINGTON

DESCRIPTION
CASING DETAIL

DESIGNATION
610

SCALE
NOT TO SCALE

REVISED
FEB 1, 2024

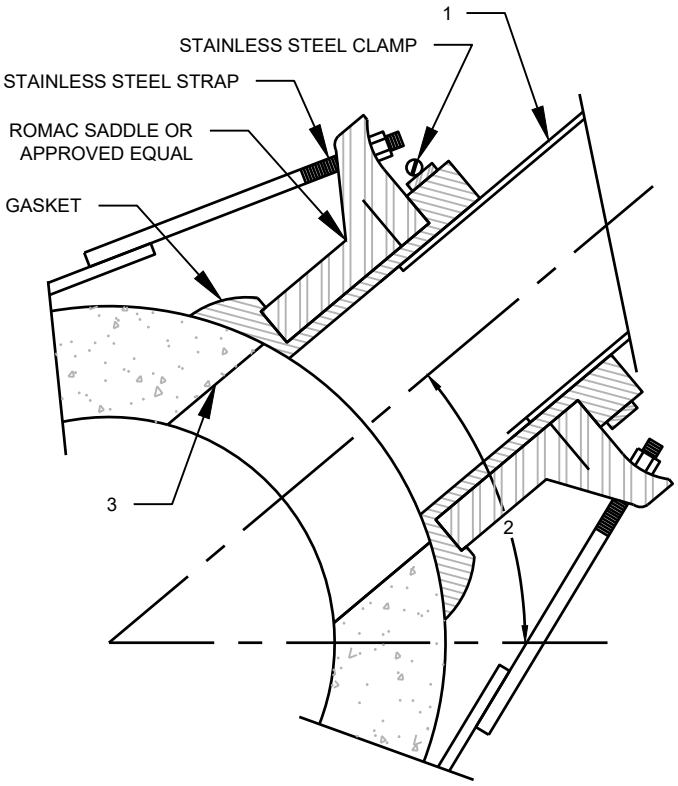

SADDLE

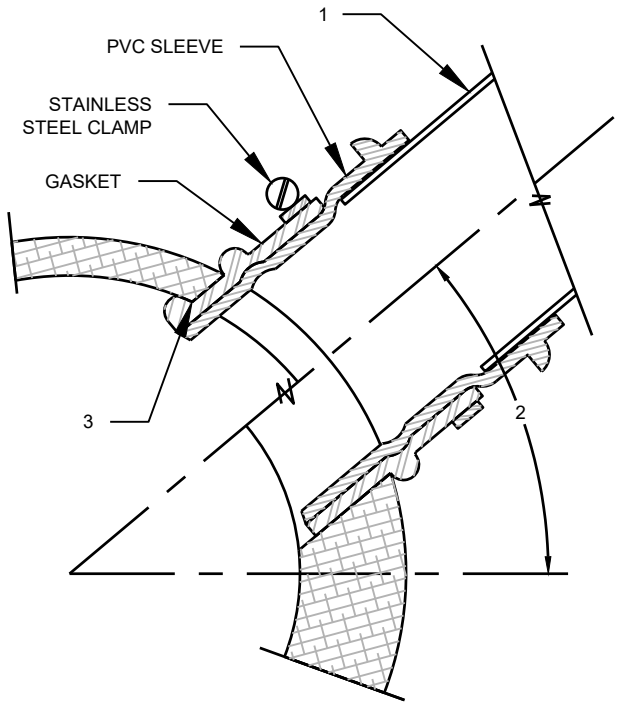

INSERTA TEE

NOTES

1. SIDE SEWER, SEE STANDARD 602
2. 35° MINIMUM ANGLE, 45° MAXIMUM ANGLE
3. CORE DRILL EXISTING SEWER MAIN
4. SIDE SEWER SHALL NOT PROTRUDE INTO THE SEWER MAIN

MONROE WASHINGTON

DESCRIPTION

TYPICAL CONNECTION TO EXISTING SEWER MAIN

DESIGNATION

611

SCALE

NOT TO SCALE

REVISED

FEB 1, 2024

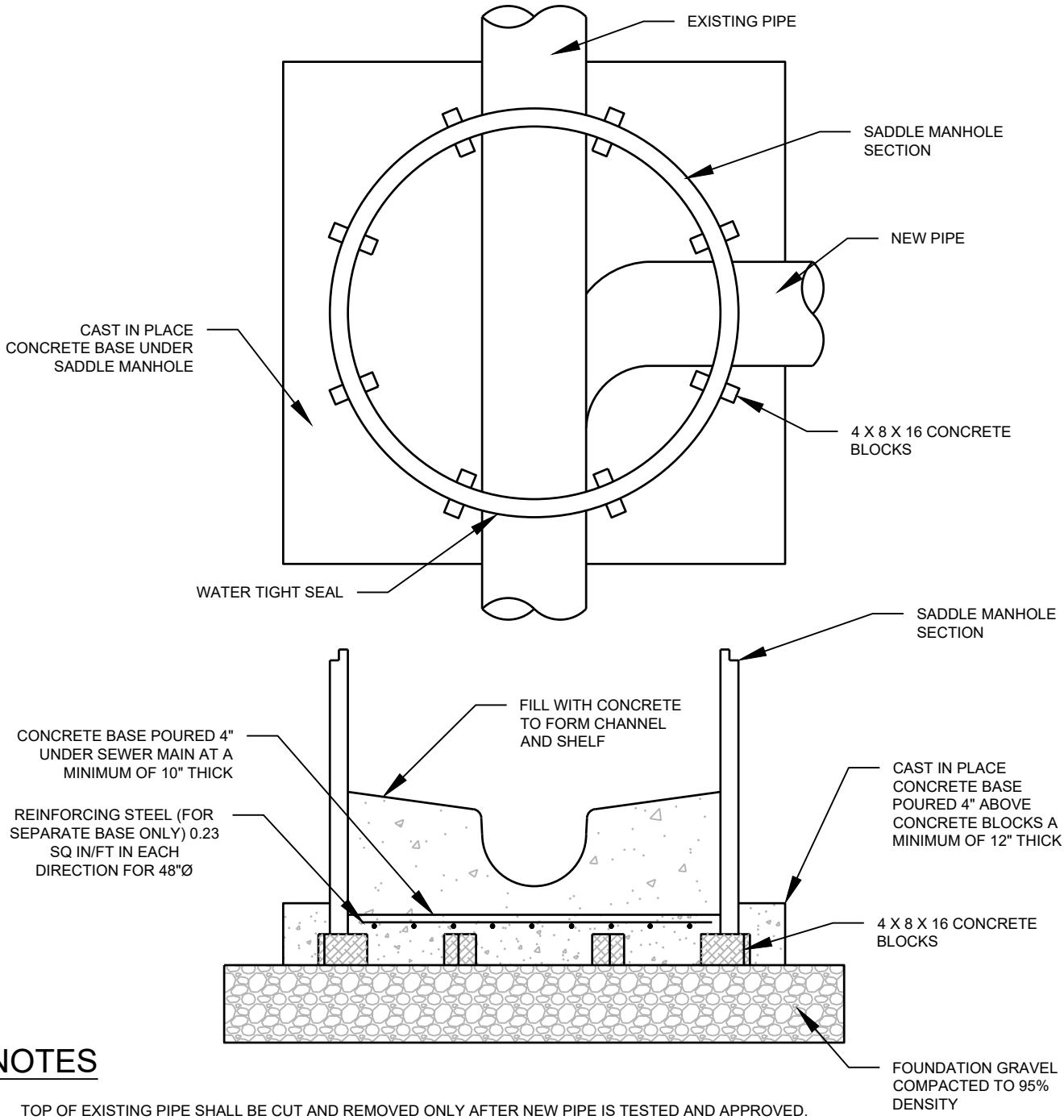

NOTES

1. TOP OF EXISTING PIPE SHALL BE CUT AND REMOVED ONLY AFTER NEW PIPE IS TESTED AND APPROVED.
2. EXISTING PIPE SHALL BE SUPPORTED AT ALL TIMES.
3. NO WEIGHT OF THE PRECAST MANHOLE UNIT SHALL BEAR ON THE EXITING PIPE.
4. CAST IN PLACE BASE SHALL BE COMMERCIAL CONCRETE.
5. THE CAST IN PLACE MANHOLE SHALL NOT BE INSTALLED OVER A BELL SECTION OR JOINT OF THE SEWER MAIN. THE MINIMUM DISTANCE FROM THE OUTSIDE WALL OF THE MANHOLE AND A BELL SECTION OR JOINT SHALL BE 2'.
6. THE UPPER HALF OF THE EXISTING PIPE SHALL BE REMOVED WHILE THE BOTTOM SHALL REMAIN AS THE CHANNEL OF THE NEW MANHOLE. IF PVC THE OUTSIDE OF THE PVC PIPE SHALL BE MADE ABRASIVE USING PRIMER AND SAND.
7. THE PRECAST BASE SHALL SIT ON EIGHT (8) 4"(W) X 8"(H) X 16"(L) CONCRETE BLOCKS PLACED ON COMPACTED SUB-GRADE.
8. ALL REINFORCED CAST IN PLACE CONCRETE SHALL BE CLASS 4000. NON-REINFORCED CONCRETE IN CHANNEL AND SHELF SHALL BE CLASS 3000. ALL PRECAST CONCRETE SHALL BE CLASS 4000.

MONROE WASHINGTON

DESCRIPTION

SADDLE MANHOLE

DESIGNATION

612

SCALE

NOT TO SCALE

REVISED

FEB 1, 2024

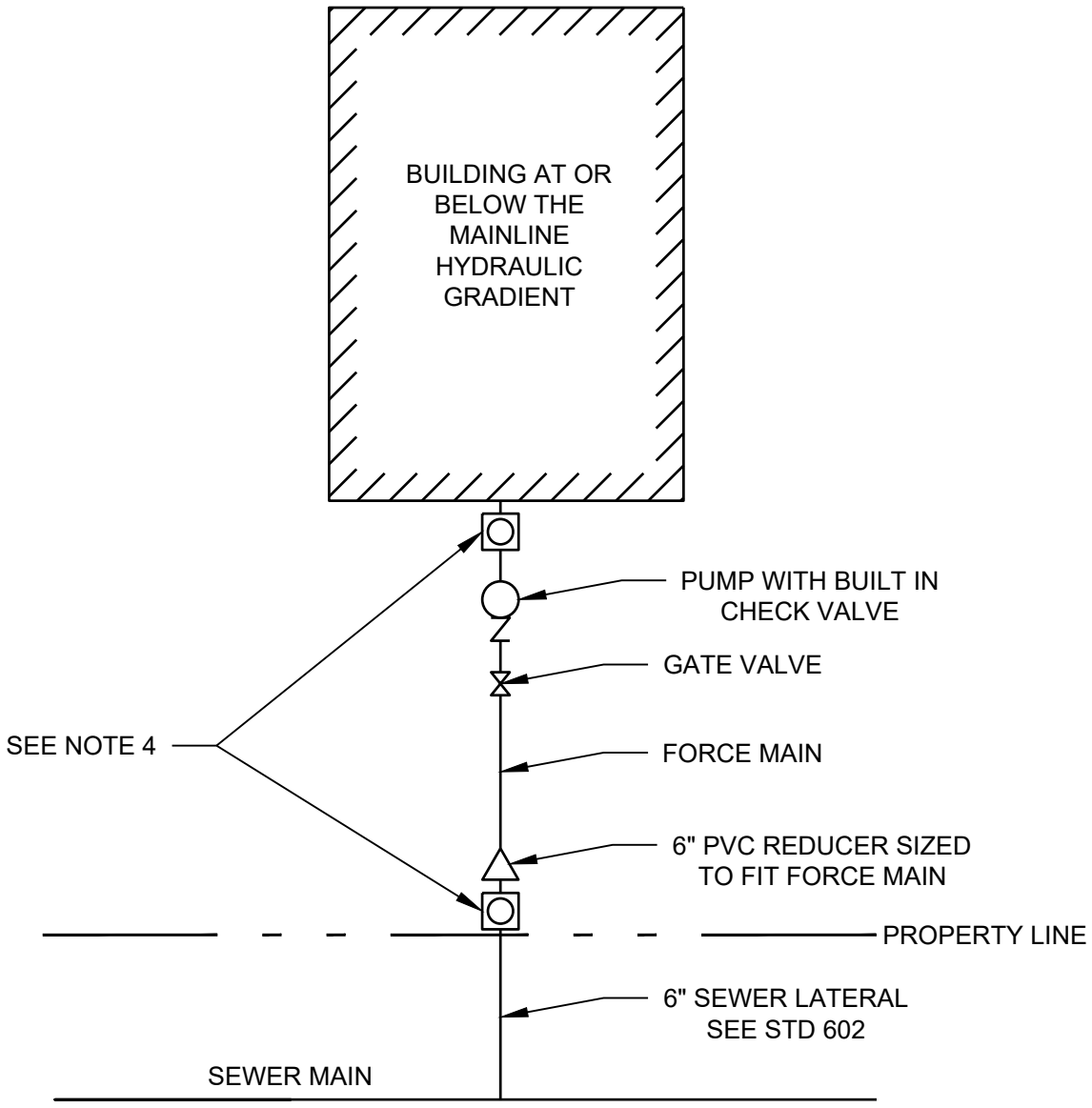

NOTES

1. PUMP SHALL NOT E CONNECTED TO A SEPTIC TANK OF ANY SIZE.
2. CHECK VALVES AND PUMP ASSEMBLIES ARE PRIVATE AND SHALL BE THE PROPERTY OWNERS RESPONSIBILITY TO MAINTAIN.
3. PUMP BASIN SYSTEM SHALL BE DESIGNED BY THE PUMP MANUFACTURER.
4. ALL CLEAN OUTS SHALL BE INSTALLED TO GRADE PER STANDARD 603.
5. FORCE MAIN TO 6" GRAVITY LATERAL CONNECT MUST BE MADE WITH PVC REDUCER, NOT FLEXIBLE COUPLING.
6. FORCE MAIN TESTING SHALL BE IN ACCORDANCE WITH THE 6.6.2 SECTION OF THE CITY OF MONROE DESIGN AND CONSTRUCTION STANDARDS FOR PUBLIC WORKS.

MONROE WASHINGTON

DESCRIPTION

SINGLE HOME SEWER PUMP SYSTEM

DESIGNATION

613

SCALE

NOT TO SCALE

REVISED

FEB 1, 2024

Appendix CE-B

Plan Approval and Meeting Minutes

THIS PAGE INTENTIONALLY BLANK

Plan Approval and Meeting Minutes are Pending.

THIS PAGE INTENTIONALLY BLANK

APPENDICES

THIS PAGE INTENTIONALLY BLANK

Appendix W-A

Water Facilities Inventory (WFI)

THIS PAGE INTENTIONALLY BLANK

Washington State Department of Health
Division of Environmental Health
Office of Drinking Water

WATER FACILITIES INVENTORY (WFI) FORM

ONE FORM PER SYSTEM

Quarter: 1
Updated: 09/28/2023
Printed: 1/10/2024
WFI Printed For: On-Demand
Submission Reason: Pop/Connect Update

RETURN TO: Central Services - WFI, PO Box 47822, Olympia, WA, 98504-7822 or email wfi@doh.wa.gov

1. SYSTEM ID NO.	2. SYSTEM NAME	3. COUNTY	4. GROUP	5. TYPE
55820 1	MONROE WATER SYSTEM	SNOHOMISH	A	Comm

6. PRIMARY CONTACT NAME & MAILING ADDRESS

JOHN H. LANDE [PW MANAGER]
769 VILLAGE WAY
MONROE, WA 98272

7. OWNER NAME & MAILING ADDRESS

MONROE, CITY OF
JOHN H. LANDE PW DIRECTOR
769 VILLAGE WAY
MONROE, WA 98272

STREET ADDRESS IF DIFFERENT FROM ABOVE

ATTN
ADDRESS
CITY STATE ZIP

STREET ADDRESS IF DIFFERENT FROM ABOVE

ATTN
ADDRESS
CITY STATE ZIP

9. 24 HOUR PRIMARY CONTACT INFORMATION

Primary Contact Daytime Phone: (360) 863-4550
Primary Contact Mobile/Cell Phone: (425) 754-3770
Primary Contact Evening Phone: (xxx)-xxx-xxxx
Fax:
E-mail: jxxxxe@monroewa.gov

10. OWNER CONTACT INFORMATION

Owner Daytime Phone: (360) 863-4550
Owner Mobile/Cell Phone: (425) 754-3770
Owner Evening Phone:
Fax: (360) 863-4601
E-mail: jxxxxe@monroewa.gov

11. SATELLITE MANAGEMENT AGENCY - SMA (check only one)

- [x] Not applicable (Skip to #12)
- [ ] Owned and Managed
- [ ] Managed Only
- [ ] Owned Only

SMA NAME: _____ SMA Number:

12. WATER SYSTEM CHARACTERISTICS (mark all that apply)

- [x] Agricultural
- [x] Commercial / Business
- [x] Day Care
- [x] Food Service/Food Permit
- [x] 1,000 or more person event for 2 or more days per year
- [x] Hospital/Clinic
- [x] Industrial
- [x] Licensed Residential Facility
- [x] Lodging
- [x] Recreational / RV Park
- [x] Residential
- [x] School
- [ ] Temporary Farm Worker
- [x] Other (church, fire station, etc.): _____

13. WATER SYSTEM OWNERSHIP (mark only one)

- [ ] Association
- [x] City / Town
- [ ] County
- [ ] Federal
- [ ] Investor
- [ ] Private
- [ ] Special District
- [ ] State

14. STORAGE CAPACITY (gallons)

8,645,000

15	16	17	18									19			20	21						22	23	24			
	SOURCE NAME	INTERTIE	SOURCE CATEGORY									USE				TREATMENT						DEPTH		SOURCE LOCATION			
Source Number	LIST UTILITY'S NAME FOR SOURCE AND WELL TAG ID NUMBER. Example: WELL #1 XYZ456 IF SOURCE IS PURCHASED OR INTERTIED, LIST SELLER'S NAME Example: SEATTLE	INTERTIE SYSTEM ID NUMBER	WELL	WELL FIELD	WELL IN A WELL FIELD	SPRING	SPRING FIELD	SPRING IN SPRINGFIELD	SEA WATER	SURFACE WATER	RANNEY / INF. GALLERY	OTHER	PERMANENT	SEASONAL	EMERGENCY	SOURCE METERED	NONE	CHLORINATION	FILTRATION	FLUORIDATION	IRRADIATION (UV)	OTHER	DEPTH TO FIRST OPEN TERVAL IN FEET	CAPACITY (GALLONS PER MINUTE)	1/4, 1/4 SECTION	SECTION NUMBER	TOWNSHIP	RANGE
S01	EVERETT	24050 L										X			Y	X							2080			00N	00E
S02	Everett	24050 L										X			Y	X							2880			00N	00E
S03	Everett	24050 L										X			Y	X							2000			00N	00E

WATER FACILITIES INVENTORY (WFI) FORM - Continued

1. SYSTEM ID NO.	2. SYSTEM NAME	3. COUNTY	4. GROUP	5. TYPE
55820 1	MONROE WATER SYSTEM	SNOHOMISH	A	Comm

	ACTIVE SERVICE CONNECTIONS	DOH USE ONLY! CALCULATED ACTIVE CONNECTIONS	DOH USE ONLY! APPROVED CONNECTIONS
25. SINGLE FAMILY RESIDENCES (How many of the following do you have?)		8176	Unspecified
A. Full Time Single Family Residences (Occupied 180 days or more per year)	6192		
B. Part Time Single Family Residences (Occupied less than 180 days per year)	0		
26. MULTI-FAMILY RESIDENTIAL BUILDINGS (How many of the following do you have?)			
A. Apartment Buildings, condos, duplexes, barracks, dorms	245		
B. Full Time Residential Units in the Apartments, Condos, Duplexes, Dorms that are occupied more than 180 days/year	1984		
C. Part Time Residential Units in the Apartments, Condos, Duplexes, Dorms that are occupied less than 180 days/year	0		
27. NON-RESIDENTIAL CONNECTIONS (How many of the following do you have?)			
A. Recreational Services and/or Transient Accommodations (Campsites, RV sites, hotel/motel/overnight units)	5	5	
B. Institutional, Commercial/Business, School, Day Care, Industrial Services, etc.	508	508	
28. TOTAL SERVICE CONNECTIONS		8689	

29. FULL-TIME RESIDENTIAL POPULATION

A. How many residents are served by this system 180 or more days per year? 20410

30. PART-TIME RESIDENTIAL POPULATION	JAN	FEB	MAR	APR	MAY	JUN	JUL	AUG	SEP	OCT	NOV	DEC
A. How many part-time residents are present each month?												
B. How many days per month are they present?												

31. TEMPORARY & TRANSIENT USERS	JAN	FEB	MAR	APR	MAY	JUN	JUL	AUG	SEP	OCT	NOV	DEC
A. How many total visitors, attendees, travelers, campers, patients or customers have access to the water system each month?	8000	8000	8000	8000	8000	8000	8000	50000	50000	8000	8000	8000
B. How many days per month is water accessible to the public?	31	28	31	30	31	30	31	31	30	31	30	31

32. REGULAR NON-RESIDENTIAL USERS	JAN	FEB	MAR	APR	MAY	JUN	JUL	AUG	SEP	OCT	NOV	DEC
A. If you have schools, daycares, or businesses connected to your water system, how many students, daycare children and/or employees are present each month that are NOT already included in the residential population?	2000	2000	2000	2000	2000	1500	1000	1000	2000	2000	2000	2000
B. How many days per month are they present?	31	28	31	30	31	30	31	31	30	31	30	31

33. ROUTINE COLIFORM SCHEDULE	JAN	FEB	MAR	APR	MAY	JUN	JUL	AUG	SEP	OCT	NOV	DEC
	25	25	25	25	25	25	25	25	25	25	25	25

34. NITRATE SCHEDULE	QUARTERLY	ANNUALLY	ONCE EVERY 3 YEARS
(One Sample per source by time period)			

35. Reason for Submitting WFI:

☐ Update - Change ☐ Update - No Change ☐ Inactivate ☐ Re-Activate ☐ Name Change ☐ New System ☐ Other _____

36. I certify that the information stated on this WFI form is correct to the best of my knowledge.

SIGNATURE: _____ **DATE:** _____

PRINT NAME: _____ **TITLE:** _____

WS ID	WS Name
55820	MONROE WATER SYSTEM

Total WFI Printed: 1

Washington State Department of Health
Division of Environmental Health
Office of Drinking Water

Water Facilities Inventory (WFI)

Report Create Date:	1/10/2024		
Water System Id(s):	55820		
Print Data on Distribution Page:	ALL		
Print Copies For:	DOH Copy		
Water System Name:	ALL		
County:	-- Any --		
Region:	ALL		
Group:	ALL		
Type:	ALL		
Permit Renewal Quarter:	ALL		
Water System Is New:	ALL		
Water System Status:	ALL		
Water Status Date From:	ALL	**To**	ALL
Water System Update Date	ALL	**To**	ALL
Owner Number:	ALL		
SMA Number:	ALL		
SMA Name:	ALL		
Active Connection Count From:	ALL	**To:**	ALL
Approved Connection Count	ALL	**To:**	ALL
Full-Time Population From:	ALL	**To:**	ALL
Water System Expanding	ALL		
Source Type:	ALL		
Source Use:	ALL		
WFI Printed For:	On-Demand		

Appendix W-B

Service Area Description

THIS PAGE INTENTIONALLY BLANK

CITY OF MONROE
WATER SERVICE AREA
BOUNDARY LEGAL DESCRIPTION

Beginning at the southwest corner NW 1/4 section 26 township 28 range 6 EWM; thence, north 1020 feet more-or-less to the northerly right-of-way proposed SR 2; thence, southeasterly along said right-of-way 7940 feet more-or-less to the intersection of said right-of-way with the easterly boundary Fair View Estates Division #1 pages 74-75 volume 25 of plats records of Snohomish County; thence, northeasterly along said boundary and along easterly boundary Fair View Estates Division #2 page 65 volume 29 records of Snohomish County to the intersection said boundary with the south line section 25 township 28 range 6 EWM; thence, east along south line to the southeast corner SW 1/4 said section; thence, north along east line SW 1/4 said section to northline line SE 1/4 SW 1/4 said section; thence, west along said north line to west line NE 1/4 SW 1/4 said section; thence, north along said west line to north line said subsection; thence, east along said north line to west line east 1/2 NE 1/4 said section; thence, north along said west line to south line section 24 township 28 range 6 EWM; thence, east to west line east 1/2 east 1/2 SE 1/4 said section; thence, north along said west line to south line NE 1/4 said section; thence, west to west line said NE 1/4; thence, north along said west line to south line NW 1/4 NE 1/4; thence, east along said south line to west line east 1/2 NW 1/4 NE 1/4; thence, north to City of Everett 52" supply main; thence, easterly along said supply main to the east line of section 21 township 28 range 7 EWM; thence, south along east line section 21 township 28 range 7 EWM, section 28 township 28 range 7 EWM to the north line section 33 township 28 range 7 EWM; thence, west along said north line to west line E 1/2 NE 1/4 said section; thence, south along said west line to north line SE 1/4 said section; thence, west along said north line 290 feet more-or-less to the west line east 6 acres of the portion of NW 1/4 SE 1/4 said section lying north of county road; thence, south along said west line 550 feet more-or-less to a point on west line said 6 acres 425 feet north of intersection said west line with north right-of-way Florence Acres Road; thence, west 450 feet;thence, southwesterly to a point on the west line SE 1/4 SW 1/4 said section 300 feet north of north right-of-way Florence Acres Road; thence, south along said west line to north right-of-way Florence Acres Road; thence south westerly along said right-of-way to northwest corner section 4 township 27 range 7 EWM; thence, south along west line section 4 township 27 range 7 EWM to the north line S 1/2 N 1/2 said section 4; thence, east along said north line to west line E 1/2 NE 1/4 said section; thence, north along said west line 330; thence, east 330 north of and parallel to the north line S 1/2 N 1/2 said section 4 to the east line said section; thence, south along said east line to the right bank Skykomish River; thence southwesterly along right bank Skykomish and Snohomish Rivers to the intersection said right bank with north line section 16 township 27 range 6 EWM; thence easterly along north line section 16 township 27 range 6 EWM, section 15 township 27 range 6 EWM to intersection north right-of-way SR 522; thence easterly along said right-of-way to west line section 11 township 27 range 6 EWM; thence, north along west line section 11 township 27 range 6 EWM, section 2 township 27 range 6 EWM, section 35 township 38 range 6 EWM, section 26 township 28 range 6 EWM to point of beginning.

Situate Snohomish County Washington

Additional service area legal description 2013

At the intersection of the right bank of the Snohomish River and the left bank of the Pilchuck River, northeasterly along said left bank to the intersection of said left bank and the South boundary line of the Burlington Northern Sante-Fe Seattle to Milwaukee Railroad Right of Way, then southeasterly to the intersection of the east line of Section 34, T. 28 N., R.6 E., and the South side of the Burlington Northern Sante-Fe Seattle to Milwaukee Railroad Right of Way, then south to the SE corner of Section 34, T. 28 N., R.6 E, then West to SW corner of the SE ¼ of the SE ¼ of Section 34, T. 28 N., R.6 E, then South to the center of the NE ¼ of Section 3 T. 27 N., R. 6 E., then East to the southeast corner of the northeast quarter Section 3, T27N, R6E, then South to the intersection of the east line of Section 10, T. 27 N., R. 6 E., and the northwestern line of the Washington State Department of Transportation State Route 522 Right of Way, then southwest to the southwest to the south line of Section 10, T. 27 N, R. 6 E, then West to the right bank of the Snohomish River, then northwesterly following the right bank of the Snohomish River back to the true point of beginning.

Appendix W-C

Local Government Consistency Forms

THIS PAGE INTENTIONALLY BLANK

The Local Government Consistency Forms are In Progress.

THIS PAGE INTENTIONALLY BLANK

Appendix W-D

Water Use Efficiency Reports and Goals

THIS PAGE INTENTIONALLY BLANK

WATER USE EFFICENCY
2020 – 2024

Proposed WUE Goals and Measures

Regional Goal: The City of Monroe has co-adopted a regional goal as part of the group of Everett Water wholesale customers. The regional conservation goal is to reduce the regional demand for water by 1.4 MGD by 2029.

City of Monroe Goal: Reduce the 3-year running average of distribution system leakage from 11.9% to less than 10% before the end of 2016. The City's goal to be under 10% leakage will be an important part of contributing and accomplishing the regional goal.

Measures: In an effort to achieve the WUE goals the City has implemented six measures. Each measure was closely evaluated and, that it would be a sensible contributor to City's WUE program. The following six measures are what the City is looking to adopted for the 2020 – 2024 program.

1. Develop a conservation minded rate structure.
2. Conservation education program developed for 2nd – 12th graders.
3. Indoor and outdoor water conservation kits for single and multi-family homes
4. Rainwater harvesting for City water-use vehicles.
5. Reclaimed water-use at the City's WWTP.
6. Audits for large water users performed by contracted professional.

Measure #1, the City is evaluating a water rate structure that emphasizes water conservation. The goal of developing a new conservation minded rate structure is to have a large portion of the charges be based on the quantity of water the customer consumes. The City's goal is to reward customers who are efficient water users. The City plans to investigate a new water rate structure by 2018.

Measure #2, as a member of the Everett Water Utilities Committee (EWUC) the City of Monroe participates in the Committee's Conservation Education Programs offered to grade school students throughout the district. Triangle Associates was hired to develop education programs and support materials that will reach students and families educating them on the impacts of water use behaviors. In 2013 Triangle Associates taught 18 classes at three of the district's elementary schools.

Measure #3, distribution of indoor and outdoor conservation kits to single-family and multi-family dwellings. Indoor kits contain a massage showerhead (2 gallons per minute), faucet

aerators (1 gallon per minute), and Teflon tape. Outdoor kits contain a garden hose nozzle and garden hose repair ends. Lawn watering timers and leak detection strips are also available separately. All these conservation tools are free to City of Monroe water customers and are available at City Hall.

Measure #4, rainwater harvesting for the City's water-use vehicles. Since 2008 the City has been maintaining a rainwater collection system where rainwater is collected from the roof of the City's decant facility and drains into two large containers. With a simple pump system, the City's water-use vehicles can use rainwater for several City programs and projects.

Measure #5, the use of reclaimed water at the City's wastewater treatment facility saves the City approximately 10.5 MG of potable water annually. Reclaimed water is used for hosing down tanks, seal water for pumps and other equipment, and polymer make-up processes. The City has explored using reclaimed water for other large water users. Sky River Park, which is near the wastewater facility is a 32-acre City park that is a probable candidate for future reclaimed water irrigation use.

Measure #6, the EWUC voted to incorporate a conservation effort for large customer audits. The City will select some of its largest water users for the program and determine which one(s) will be chosen for audit. The audits will be performed by a contracted professional. The idea is to work with local businesses and determine efficient water use.

Washington State Department of Health
Division of Environmental Health
Office of Drinking Water

Date Submitted: 6/2/2015

Water Use Efficiency
Annual Performance Report - 2014

WS Name: MONROE WATER SYSTEM

Water System ID# : 55820 WS County: SNOHOMISH

Report submitted by: *Jordan Ottow*

Meter Installation Information:

Estimate the percentage of metered connections: *100%*

If not 100% metered – Did you submit a meter installation plan to DOH? No

Within your meter installation plan, what date did you commit to completing meter installation?

Current status of meter installation:

Production, Authorized Consumption, and Distribution System Leakage Information:

12-Month WUE Reporting Period *12/18/2013* To *12/10/2014*

Incomplete or missing data for the year? *No*

If yes, explain:

Total Water Produced & Purchased (TP) – Annual volume gallons	*742,229,928* gallons	
Authorized Consumption (AC) – Annual Volume in gallons	*694,612,996* gallons	
Distribution System Leakage – Annual Volume TP – AC	*47,616,932* gallons	
Distribution System Leakage – DSL = [(TP – AC) / TP] x 100 %	*6.4 %*	
3-year annual average - %	*8.5 %*	*2012, 2013, 2014*

Goal-Setting Information:

Enter the date of most recent public forum to establish WUE goal: *06/17/2014*

Has goal been changed since last performance report? *Yes*

Note: Customer goal must be re-established every 6 years through a public process.

Customer WUE Goal (Demand Side):

The City of Monroe has co-adopted a regional goal with the Everett Water wholesale customers. The regional goal is to reduce the regional demand for water by 2.0 MGD by 2019.

Washington State Department of Health
Division of Environmental Health
Office of Drinking Water

Date Submitted: 7/1/2016

Water Use Efficiency
Annual Performance Report - 2015

WS Name: MONROE WATER SYSTEM

Water System ID# : 55820 WS County: SNOHOMISH

Report submitted by: *Jordan Ottow*

Meter Installation Information:

Estimate the percentage of metered connections: *100%*

If not 100% metered – Did you submit a meter installation plan to DOH? No

Within your meter installation plan, what date did you commit to completing meter installation?

Current status of meter installation:

Production, Authorized Consumption, and Distribution System Leakage Information:

12-Month WUE Reporting Period *12/11/2014* To *12/11/2015*

Incomplete or missing data for the year? *No*

If yes, explain:

Total Water Produced & Purchased (TP) – Annual volume gallons	*797,118,916*	gallons	
Authorized Consumption (AC) – Annual Volume in gallons	*757,002,928*	gallons	
Distribution System Leakage – Annual Volume TP – AC	*40,115,988*	gallons	
Distribution System Leakage – DSL = [(TP – AC) / TP] x 100 %	*5.0 %*		
3-year annual average - %	*6.7 %*		*2013, 2014, 2015*

Goal-Setting Information:

Enter the date of most recent public forum to establish WUE goal: *06/17/2014*

Has goal been changed since last performance report? *No*

Note: Customer goal must be re-established every 6 years through a public process.

Customer WUE Goal (Demand Side):

The City of Monroe has co-adopted a regional goal with the Everett Water wholesale customers. The regional goal is to reduce the regional demand for water by 2.0 MGD by 2019.

Customer (Demand Side) Goal Progress:

Educational Programs: 16 conservation programs were implemented throughout the Monroe School
District reaching 380 students.
Conservation tools: 150 indoor kits and 300 outdoor conservation kits were distributed to City of Monroe water customers.
Rainwater harvesting: rainwater collected from the roof of the City's decant facility fills large drums that can hold 17,000 gallons of water. The water is used to fill City owned vactor, street-sweeper,and tanker trucks. The trucks use approximately 75,000 gallons of harvested rainwater each year saving the City over $2,000.

Additional Information Regarding Supply and Demand Side WUE Efforts

Total Unaccounted for Water: The City has had one it's best year's since the WUE reporting began recording only 5% water loss for 2015.
Current Measures:
1. Develop a conservation minded rate structure: began in 2015. Keeping customers more aware of usage.
2. Conservation education program developed for 2nd – 12th graders
3. Indoor and outdoor water conservation kits for single and multi-family homes
4. Rainwater harvesting for City water-use vehicles
5. Reclaimed water-use at the City's WWTP
6. Large water users audits performed by contracted professional: first large water user audit to be performed in July of 2016. Customer has agreed to make water usage conservation improvements bases off findings.

Describe Progress in Reaching Goals:

- Estimate how much water you saved.
- Report progress toward meeting goals within your established timeframe.
- Identify any WUE measures you are currently implementing.
- If you established a goal to maintain a historic level (such as maintaining daily consumption at 65 gallons per person per day for the next two years) you must explain why you are unable to reduce water use below that level.

The following questions will help DOH better understand water usage, water resources management and drought response. The data will be used to provide technical assistance, not for regulatory purposes.

All questions are voluntary

Month	Date of Measurement	Static Water Level (feet below measuring point)	Dynamic Water Level (feet below measuring point)
January			
February			
March			
April			
May			
June			
July			
August			
September			
October			
November			
December			

Water level data:

Please provide the following information (if known) to help us better utilize the water level data.

Well tag Id number:

Well depth:

Water level accuracy (within 0.01 ft < 1 ft ~ 1 ft)

Completion type (e.g., cased open interval, cased open-ended, cased open-ended with perforations, etc…)

Location coordinates (latitude, longitude) and accuracy of the coordinates (< 1ft, ~1ft, >1000ft)

Water level parameter name (e.g. depth below measuring point, depth below top of casing, depth below ground surface)

Elevation of top of casing OR elevation of measuring point if different than top of casing (as specified in question 7)

Monthly/Seasonal Water Usage:

What was your maximum daily water demand for the previous year (in gallons per day)? _____

Month	Volume of Water Produced in gallons
January	
February	
March	
April	
May	
June	
July	
August	
September	
October	
November	
December	

Water shortage response:

Did you activate any level of water shortage response plan the previous year?

☐ Yes ☐ No ☐ There was no need to

If you activated a water shortage response plan the previous year, what level did you activate? (Check all that apply)

☐ Advisory Conservation ☐ Voluntary Conservation

☐ Mandatory Conservation ☐ Rationing ☐ Other

What factors caused your water shortage the previous year?

☐ Drought ☐ Fire ☐ Landslides ☐ Earthquakes

☐ Flooding ☐ Water Supply Limitations ☐ Other

Do not mail, fax, or email this report to DOH

Washington State Department of Health
Division of Environmental Health
Office of Drinking Water

Date Submitted: 6/27/2017

Water Use Efficiency
Annual Performance Report - 2016

WS Name: MONROE WATER SYSTEM

Water System ID# : 55820 WS County: SNOHOMISH

Report submitted by: *Jordan Ottow*

Meter Installation Information:

Estimate the percentage of metered connections: *100%*

If not 100% metered – Did you submit a meter installation plan to DOH? No

Within your meter installation plan, what date did you commit to completing meter installation?

Current status of meter installation:

Production, Authorized Consumption, and Distribution System Leakage Information:

12-Month WUE Reporting Period *01/01/2016* To *12/31/2016*

Incomplete or missing data for the year? *No*

If yes, explain:

Total Water Produced & Purchased (TP) – Annual volume gallons	*792,958,540* gallons	
Authorized Consumption (AC) – Annual Volume in gallons	*732,362,300* gallons	
Distribution System Leakage – Annual Volume TP – AC	*60,596,240* gallons	
Distribution System Leakage – DSL = [(TP – AC) / TP] x 100 %	*7.6 %*	
3-year annual average - %	*6.3 %*	*2014, 2015, 2016*

Goal-Setting Information:

Enter the date of most recent public forum to establish WUE goal: *06/17/2014*

Has goal been changed since last performance report? *No*

Note: Customer goal must be re-established every 6 years through a public process.

Customer WUE Goal (Demand Side):

The City of Monroe has co-adopted a regional goal with the Everett Water wholesale customers. The regional goal is to reduce the regional demand for water by 2.0 MGD by 2019.

Customer (Demand Side) Goal Progress:

New to this year's report is that the City of Monroe is now running an automated meter reading program. This allows staff to better track customer usage. High use and leak alarms have increased response time to stop wasted water issues.
Conservation tools: 150 indoor kits and 300 outdoor conservation kits were distributed to City of Monroe water customers.
Rainwater harvesting: rainwater collected from the roof of the City's decant facility fills large drums
that can hold 17,000 gallons of water. The water is used to fill City owned vactor, street-sweeper,and
tanker trucks. The trucks use approximately 75,000 gallons of harvested rainwater each year saving
the City over $2,000

Additional Information Regarding Supply and Demand Side WUE Efforts

Current Measures:
1. Develop a conservation minded rate structure: began in 2015. Keeping customers more aware of
usage.
2. Conservation education program developed for 2nd – 12th graders
3. Indoor and outdoor water conservation kits for single and multi-family homes
4. Rainwater harvesting for City water-use vehicles
5. Reclaimed water-use at the City's WWTP
6. Large water users audits performed by contracted professional: Monroe is conducting it's second year of a large water audit. The City Park's Department has agreed to have an audit done of all it's facilities and irrigation systems.

Describe Progress in Reaching Goals:

- Estimate how much water you saved.
- Report progress toward meeting goals within your established timeframe.
- Identify any WUE measures you are currently implementing.
- If you established a goal to maintain a historic level (such as maintaining daily consumption at 65 gallons per person per day for the next two years) you must explain why you are unable to reduce water use below that level.

The following questions will help DOH better understand water usage, water resources management and drought response. The data will be used to provide technical assistance, not for regulatory purposes.

All questions are voluntary

Month	Date of Measurement	Static Water Level (feet below measuring point)	Dynamic Water Level (feet below measuring point)
January			
February			
March			
April			
May			
June			
July			
August			
September			
October			
November			
December			

Water level data:

Please provide the following information (if known) to help us better utilize the water level data.

Well tag Id number:

Well depth:

Water level accuracy (within 0.01 ft < 1 ft ~ 1 ft)

Completion type (e.g., cased open interval, cased open-ended, cased open-ended with perforations, etc…)

Location coordinates (latitude, longitude) and accuracy of the coordinates (< 1ft, ~1ft, >1000ft)

Water level parameter name (e.g. depth below measuring point, depth below top of casing, depth below ground surface)

Elevation of top of casing OR elevation of measuring point if different than top of casing (as specified in question 7)

Monthly/Seasonal Water Usage:

What was your maximum daily water demand for the previous year (in gallons per day)? _____

Month	Volume of Water Produced in gallons
January	
February	
March	
April	
May	
June	
July	
August	
September	
October	
November	
December	

Water shortage response:

Did you activate any level of water shortage response plan the previous year?

☐ Yes ☐ No ☐ There was no need to

If you activated a water shortage response plan the previous year, what level did you activate? (Check all that apply)

☐ Advisory Conservation ☐ Voluntary Conservation

☐ Mandatory Conservation ☐ Rationing ☐ Other

What factors caused your water shortage the previous year?

☐ Drought ☐ Fire ☐ Landslides ☐ Earthquakes

☐ Flooding ☐ Water Supply Limitations ☐ Other

Do not mail, fax, or email this report to DOH

Washington State Department of Health
Division of Environmental Health
Office of Drinking Water

Date Submitted: 6/27/2018

Water Use Efficiency
Annual Performance Report - 2017

WS Name: MONROE WATER SYSTEM

Water System ID# : 55820 WS County: SNOHOMISH

Report submitted by: *Jordan Ottow*

Meter Installation Information:

Estimate the percentage of metered connections: *100%*

If not 100% metered – Did you submit a meter installation plan to DOH? No

Within your meter installation plan, what date did you commit to completing meter installation?

Current status of meter installation:

Production, Authorized Consumption, and Distribution System Leakage Information:

12-Month WUE Reporting Period *01/15/2017* To *12/15/2017*

Incomplete or missing data for the year? *No*

If yes, explain:

Total Water Produced & Purchased (TP) – Annual volume gallons	*837,589,456*	gallons
Authorized Consumption (AC) – Annual Volume in gallons	*777,510,844*	gallons
Distribution System Leakage – Annual Volume TP – AC	*60,078,612*	gallons
Distribution System Leakage – DSL = [(TP – AC) / TP] x 100 %	*7.2 %*	
3-year annual average - %	*6.6 %*	*2015, 2016, 2017*

Goal-Setting Information:

Enter the date of most recent public forum to establish WUE goal: *06/17/2014*

Has goal been changed since last performance report? *No*

Note: Customer goal must be re-established every 6 years through a public process.

Customer WUE Goal (Demand Side):

The City of Monroe has co-adopted a regional goal with the Everett Water wholesale customers. The regional goal is to reduce the regional demand for water by 2.0 MGD by 2019.

Customer (Demand Side) Goal Progress:

The City of Monroe Cross-Connection Control staff are encouraging customers who are not using their sprinkler systems to remove their backflow assemblies and to disconnect their sprinkler systems altogether. The City promotes the public to look to using native vegetation and drought tolerant plants for landscaping.

The City of Monroe is running an automated meter reading program. This allows staff to better track customer usage. High use and leak alarms have increased response time to stop wasted water issues. The City has added an employee to assist in leak check response.

Rainwater harvesting: rainwater collected from the roof of the City's decant facility fills large drums that can hold 17,000 gallons of water. The water is used to fill City owned vactor, street-sweeper,and tanker trucks. The trucks use approximately 75,000 gallons of harvested rainwater each year saving the City over $2,000.

Additional Information Regarding Supply and Demand Side WUE Efforts

1. Develop a conservation minded rate structure: began in 2015. Keeping customers more aware of
usage. Fees for late payments and water turn-on have increased to help keep customers more aware of their usage.
2. Conservation education program developed for 2nd – 12th graders.
3. Indoor and outdoor water conservation kits for single and multi-family homes.
4. Rainwater harvesting for City water-use vehicles.
5. Reclaimed water-use at the City's WWTP.
6. Staff education on how to keep a look out for water theft.
7. Rental hydrant meter usage for contractors needing large volumes of water.

Describe Progress in Reaching Goals:

- Estimate how much water you saved.
- Report progress toward meeting goals within your established timeframe.
- Identify any WUE measures you are currently implementing.
- If you established a goal to maintain a historic level (such as maintaining daily consumption at 65 gallons per person per day for the next two years) you must explain why you are unable to reduce water use below that level.

The following questions will help DOH better understand water usage, water resources management and drought response. The data will be used to provide technical assistance, not for regulatory purposes.

All questions are voluntary

Month	Date of Measurement	Static Water Level (feet below measuring point)	Dynamic Water Level (feet below measuring point)
January			
February			
March			
April			
May			
June			
July			
August			
September			
October			
November			
December			

Water level data:

Please provide the following information (if known) to help us better utilize the water level data.

Well tag Id number:

Well depth:

Water level accuracy (within 0.01 ft < 1 ft ~ 1 ft)

Completion type (e.g., cased open interval, cased open-ended, cased open-ended with perforations, etc…)

Location coordinates (latitude, longitude) and accuracy of the coordinates (< 1ft, ~1ft, >1000ft)

Water level parameter name (e.g. depth below measuring point, depth below top of casing, depth below ground surface)

Elevation of top of casing OR elevation of measuring point if different than top of casing (as specified in question 7)

Monthly/Seasonal Water Usage:

What was your maximum daily water demand for the previous year (in gallons per day)? _____

Month	Volume of Water Produced in gallons
January	
February	
March	
April	
May	
June	
July	
August	
September	
October	
November	
December	

Water shortage response:

Did you activate any level of water shortage response plan the previous year?

☐ Yes ☐ No ☐ There was no need to

If you activated a water shortage response plan the previous year, what level did you activate? (Check all that apply)

☐ Advisory Conservation ☐ Voluntary Conservation

☐ Mandatory Conservation ☐ Rationing ☐ Other

What factors caused your water shortage the previous year?

☐ Drought ☐ Fire ☐ Landslides ☐ Earthquakes

☐ Flooding ☐ Water Supply Limitations ☐ Other

Do not mail, fax, or email this report to DOH

Washington State Department of Health
Division of Environmental Health
Office of Drinking Water

Date Submitted: 6/25/2019

Water Use Efficiency
Annual Performance Report - 2018

WS Name: MONROE WATER SYSTEM

Water System ID# : 55820 WS County: SNOHOMISH

Report submitted by: *John Christian*

Meter Installation Information:

Estimate the percentage of metered connections: *100%*

If not 100% metered – Did you submit a meter installation plan to DOH? No

Within your meter installation plan, what date did you commit to completing meter installation?

Current status of meter installation:

Production, Authorized Consumption, and Distribution System Leakage Information:

12-Month WUE Reporting Period *12/16/2017* To *12/15/2018*

Incomplete or missing data for the year? *No*

If yes, explain:

Total Water Produced & Purchased (TP) – Annual volume gallons	*784,830,772*	gallons	
Authorized Consumption (AC) – Annual Volume in gallons	*740,723,283*	gallons	
Distribution System Leakage – Annual Volume TP – AC	*44,107,489*	gallons	
Distribution System Leakage – DSL = [(TP – AC) / TP] x 100 %	*5.6 %*		
3-year annual average - %	*6.8 %*		*2016, 2017, 2018*

Goal-Setting Information:

Enter the date of most recent public forum to establish WUE goal: *06/17/2014*

Has goal been changed since last performance report? *No*

Note: Customer goal must be re-established every 6 years through a public process.

Customer WUE Goal (Demand Side):

The City of Monroe has co-adopted a regional goal with the Everett Water wholesale customers. The regional goal is to reduce the regional demand for water by 2.0 MGD by 2019.

Customer (Demand Side) Goal Progress:

The City of Monroe Cross Connection Control staff continue to encourage customers who are not using their irrigation systems to properly disconnect their irrigation systems and remove existing backflow devices. The City continues to promote native vegetation and drought tolerant plants for all landscaping.

The City maintains use of an automated metering program. This program has allowed for staff to better track customer usage and potential leaks. High use alarms on the metering system have allowed for increased customer response and service.

The City continues to make metering and water use efficiency a priority through staffing and public education.

Additional Information Regarding Supply and Demand Side WUE Efforts

1. Develop a conservation minded rate structure: began in 2015. Keeping customers more aware of usage. Fees for late payments and water turn-on have increased to help keep customers more aware of their usage.
2. Conservation education program developed for 2nd-12th graders.
3. Indoor and outdoor conservation kits for single and multi-family homes.
4. Reclaimed water-use at the Waste Water Treatment Plant.
5. Staff education on how to recognize water theft and misuse.
6. Hydrant meter rental program for contractors in need of large volumes of water.

Describe Progress in Reaching Goals:

- Estimate how much water you saved.
- Report progress toward meeting goals within your established timeframe.
- Identify any WUE measures you are currently implementing.
- If you established a goal to maintain a historic level (such as maintaining daily consumption at 65 gallons per person per day for the next two years) you must explain why you are unable to reduce water use below that level.

The following questions will help DOH better understand water usage, water resources management and drought response. The data will be used to provide technical assistance, not for regulatory purposes.

All questions are voluntary

Month	Date of Measurement	Static Water Level (feet below measuring point)	Dynamic Water Level (feet below measuring point)
January			
February			
March			
April			
May			
June			
July			
August			
September			
October			
November			
December			

Water level data:

Please provide the following information (if known) to help us better utilize the water level data.

Well tag Id number:

Well depth:

Water level accuracy (within 0.01 ft < 1 ft ~ 1 ft)

Completion type (e.g., cased open interval, cased open-ended, cased open-ended with perforations, etc…)

Location coordinates (latitude, longitude) and accuracy of the coordinates (< 1ft, ~1ft, >1000ft)

Water level parameter name (e.g. depth below measuring point, depth below top of casing, depth below ground surface)

Elevation of top of casing OR elevation of measuring point if different than top of casing (as specified in question 7)

Monthly/Seasonal Water Usage:

What was your maximum daily water demand for the previous year (in gallons per day)? _____

Month	**Volume of Water Produced in gallons**
January	
February	
March	
April	
May	
June	
July	
August	
September	
October	
November	
December	

Water shortage response:

Did you activate any level of water shortage response plan the previous year?

- ☐ Yes
- ☐ No
- ☐ There was no need to

If you activated a water shortage response plan the previous year, what level did you activate? (Check all that apply)

- ☐ Advisory Conservation
- ☐ Voluntary Conservation
- ☐ Mandatory Conservation
- ☐ Rationing
- ☐ Other

What factors caused your water shortage the previous year?

- ☐ Drought
- ☐ Fire
- ☐ Landslides
- ☐ Earthquakes
- ☐ Flooding
- ☐ Water Supply Limitations
- ☐ Other

Do not mail, fax, or email this report to DOH

Washington State Department of Health
Division of Environmental Health
Office of Drinking Water

Date Submitted: 6/19/2020

Water Use Efficiency
Annual Performance Report - 2019

WS Name: MONROE WATER SYSTEM

Water System ID# : 55820 WS County: SNOHOMISH

Report submitted by: *Scott Barr*

Meter Installation Information:

Estimate the percentage of metered connections: *100%*

If not 100% metered – Did you submit a meter installation plan to DOH? No

Within your meter installation plan, what date did you commit to completing meter installation?

Current status of meter installation:

Production, Authorized Consumption, and Distribution System Leakage Information:

12-Month WUE Reporting Period *12/16/2018* To *12/15/2019*

Incomplete or missing data for the year? *No*

If yes, explain:

Total Water Produced & Purchased (TP) – Annual volume gallons	*774,463,492*	gallons	
Authorized Consumption (AC) – Annual Volume in gallons	*724,215,840*	gallons	
Distribution System Leakage – Annual Volume TP – AC	*50,247,652*	gallons	
Distribution System Leakage – DSL = [(TP – AC) / TP] x 100 %	*6.5 %*		
3-year annual average - %	*6.4 %*		*2017, 2018, 2019*

Goal-Setting Information:

Enter the date of most recent public forum to establish WUE goal: *06/17/2014*

Has goal been changed since last performance report? *No*

Note: Customer goal must be re-established every 6 years through a public process.

Customer WUE Goal (Demand Side):

The City of Monroe has co-adopted a regional goal with the Everett Water wholesale customers. The regional goal is to reduce the regional demand for water by 2.0 MGD by 2019.

Customer (Demand Side) Goal Progress:

The City of Monroe's Cross Connection Control staff continue to encourage customers who are not using their irrigation systems to properly disconnect their irrigation systems and remove backflow devices. The City continues to promote drought tolerant and native vegetation for all landscaping. The City maintains use of an automated metering program. This program has provided for the tracking of potential leaks, customer usage tracking, and alarms for unusual consumption. Based upon a consistent data flow, staff is able to better respond to leaks, breaks, and high usage. Water use efficiency continue to be a priority for the City through staff and public education.

Additional Information Regarding Supply and Demand Side WUE Efforts

1. Develop and review a conservation minded rate structure
2. Conservation education developed for staff and public
3. Staff education to recognize water misuse
4. Indoor and outdoor water conservation kits for single and multi-family homes
5. Hydrant meter rental for construction and high use applications
6. Reclaimed water-use at the City's WWTP
7. Audits for large water users performed by contracted professional

Describe Progress in Reaching Goals:

- Estimate how much water you saved.
- Report progress toward meeting goals within your established timeframe.
- Identify any WUE measures you are currently implementing.
- If you established a goal to maintain a historic level (such as maintaining daily consumption at 65 gallons per person per day for the next two years) you must explain why you are unable to reduce water use below that level.

The following questions will help DOH better understand water usage, water resources management and drought response. The data will be used to provide technical assistance, not for regulatory purposes.

All questions are voluntary

Month	Date of Measurement	Static Water Level (feet below measuring point)	Dynamic Water Level (feet below measuring point)
January			
February			
March			
April			
May			
June			
July			
August			
September			
October			
November			
December			

Water level data:

Please provide the following information (if known) to help us better utilize the water level data.

Well tag Id number:

Well depth:

Water level accuracy (within 0.01 ft < 1 ft ~ 1 ft)

Completion type (e.g., cased open interval, cased open-ended, cased open-ended with perforations, etc…)

Location coordinates (latitude, longitude) and accuracy of the coordinates (< 1ft, ~1ft, >1000ft)

Water level parameter name (e.g. depth below measuring point, depth below top of casing, depth below ground surface)

Elevation of top of casing OR elevation of measuring point if different than top of casing (as specified in question 7)

Monthly/Seasonal Water Usage:

What was your maximum daily water demand for the previous year (in gallons per day)? _____

Month	**Volume of Water Produced in gallons**
January	
February	
March	
April	
May	
June	
July	
August	
September	
October	
November	
December	

Water shortage response:

Did you activate any level of water shortage response plan the previous year?

- ☐ Yes
- ☐ No
- ☐ There was no need to

If you activated a water shortage response plan the previous year, what level did you activate? (Check all that apply)

- ☐ Advisory Conservation
- ☐ Voluntary Conservation
- ☐ Mandatory Conservation
- ☐ Rationing
- ☐ Other

What factors caused your water shortage the previous year?

- ☐ Drought
- ☐ Fire
- ☐ Landslides
- ☐ Earthquakes
- ☐ Flooding
- ☐ Water Supply Limitations
- ☐ Other

Do not mail, fax, or email this report to DOH

Washington State Department of Health
Division of Environmental Health
Office of Drinking Water

Date Submitted: 6/18/2021

Water Use Efficiency
Annual Performance Report - 2020

WS Name: MONROE WATER SYSTEM

Water System ID# : 55820 WS County: SNOHOMISH

Report submitted by: *Scott Barr*

Meter Installation Information:

Estimate the percentage of metered connections: *100%*

If not 100% metered – Did you submit a meter installation plan to DOH? No

Within your meter installation plan, what date did you commit to completing meter installation?

Current status of meter installation:

Production, Authorized Consumption, and Distribution System Leakage Information:

12-Month WUE Reporting Period *12/16/2019* To *12/15/2020*

Incomplete or missing data for the year? *No*

If yes, explain:

Total Water Produced & Purchased (TP) – Annual volume gallons	*776,989,488*	gallons	
Authorized Consumption (AC) – Annual Volume in gallons	*705,271,166*	gallons	
Distribution System Leakage – Annual Volume TP – AC	*71,718,322*	gallons	
Distribution System Leakage – DSL = [(TP – AC) / TP] x 100 %	*9.2 %*		
3-year annual average - %	*7.1 %*		*2018, 2019, 2020*

Goal-Setting Information:

Enter the date of most recent public forum to establish WUE goal: *12/22/2020*

Has goal been changed since last performance report? *Yes*

Note: Customer goal must be re-established every 6 years through a public process.

Customer WUE Goal (Demand Side):

The City of Monroe has co-adopted a regional goal with the Everett Water wholesale customers. The regional goal is to reduce the regional demand for water by 1.8 MGD by 2029.

Customer (Demand Side) Goal Progress:

The City of Monroe's Cross Connection Control staff continue to encourage customers who are not using their irrigation systems to properly disconnect by removing the backflow device. The City continues to promote drought tolerant and native vegetation for landscaping. The City maintains use of an automated metering program that provides tracking of potential leaks, customer usage and alarms for unusual consumption. Based upon a consistent data flow, staff can better respond to leaks, breaks, and high usage. Water use efficiency continues to be a priority for the City through staff and public education.

Additional Information Regarding Supply and Demand Side WUE Efforts

1. Conservation education developed for staff and public
2. Staff education to recognize water misuse
3. Indoor and outdoor water conservation kits for single and multi-family homes
4. Hydrant meter rental for construction sites
5. Reclaimed water-use at the City's WWTP
6. Leak detection was done to about 20% of the water system so far this year

Describe Progress in Reaching Goals:

- Estimate how much water you saved.
- Report progress toward meeting goals within your established timeframe.
- Identify any WUE measures you are currently implementing.
- If you established a goal to maintain a historic level (such as maintaining daily consumption at 65 gallons per person per day for the next two years) you must explain why you are unable to reduce water use below that level.

The following questions will help DOH better understand water usage, water resources management and drought response. The data will be used to provide technical assistance, not for regulatory purposes.

All questions are voluntary

Month	Date of Measurement	Static Water Level (feet below measuring point)	Dynamic Water Level (feet below measuring point)
January			
February			
March			
April			
May			
June			
July			
August			
September			
October			
November			
December			

Water level data:

Please provide the following information (if known) to help us better utilize the water level data.

Well tag Id number:

Well depth:

Water level accuracy (within 0.01 ft < 1 ft ~ 1 ft)

Completion type (e.g., cased open interval, cased open-ended, cased open-ended with perforations, etc…)

Location coordinates (latitude, longitude) and accuracy of the coordinates (< 1ft, ~1ft, >1000ft)

Water level parameter name (e.g. depth below measuring point, depth below top of casing, depth below ground surface)

Elevation of top of casing OR elevation of measuring point if different than top of casing (as specified in question 7)

Monthly/Seasonal Water Usage:

What was your maximum daily water demand for the previous year (in gallons per day)?

Month	**Volume of Water Produced in gallons**
January	
February	
March	
April	
May	
June	
July	
August	
September	
October	
November	
December	

Water shortage response:

Did you activate any level of water shortage response plan the previous year?

- ☐ Yes
- ☑ No
- ☐ There was no need to

If you activated a water shortage response plan the previous year, what level did you activate? (Check all that apply)

- ☐ Advisory Conservation
- ☐ Voluntary Conservation
- ☐ Mandatory Conservation
- ☐ Rationing
- ☐ Other

What factors caused your water shortage the previous year?

- ☐ Drought
- ☐ Fire
- ☐ Landslides
- ☐ Earthquakes
- ☐ Flooding
- ☐ Water Supply Limitations
- ☐ Other

Do not mail, fax, or email this report to DOH

Washington State Department of Health
Division of Environmental Health
Office of Drinking Water

Date Submitted: 6/17/2022

Water Use Efficiency
Annual Performance Report - 2021

WS Name: MONROE WATER SYSTEM

Water System ID# : 55820 WS County: SNOHOMISH

Report submitted by: *Scott Barr*

Meter Installation Information:

Estimate the percentage of metered connections: *100%*

If not 100% metered – Did you submit a meter installation plan to DOH? No

Within your meter installation plan, what date did you commit to completing meter installation?

Current status of meter installation:

Production, Authorized Consumption, and Distribution System Leakage Information:

12-Month WUE Reporting Period *12/16/2020* To *12/15/2021*

Incomplete or missing data for the year? *Yes*

If yes, explain:

One of our master meters was down for a time so we are not showing an accurate amount of water purchased.

Total Water Produced & Purchased (TP) – Annual volume gallons	*644,318,972*	gallons	
Authorized Consumption (AC) – Annual Volume in gallons	*733,598,928*	gallons	
Distribution System Leakage – Annual Volume TP – AC	*-89,279,956*	gallons	
Distribution System Leakage – DSL = [(TP – AC) / TP] x 100 %	*-13.9 %*		
3-year annual average - %	*7.1 %*		*2018, 2019, 2020*

Goal-Setting Information:

Enter the date of most recent public forum to establish WUE goal: *12/22/2020*

Has goal been changed since last performance report? *No*

Note: Customer goal must be re-established every 6 years through a public process.

Customer WUE Goal (Demand Side):

The City of Monroe has co-adopted a regional goal with the Everett Water wholesale customers. The regional goal is to reduce the regional demand for water by 1.8 MGD by 2029.

Customer (Demand Side) Goal Progress:

The City of Monroe Cross Connection Control staff continues to encourage customers who are not using their irrigation systems to properly disconnect them by removing the backflow device. The City continues to promote drought tolerant native landscaping. The City maintains use of an automated metering program that provides tracking of potential leaks, customer usage and alarms for unusual consumption. Based upon a consistent data flow, staff can better respond to leaks, breaks and high usage. Water use efficiency continues to be a priority for the City through staff and public education.

Additional Information Regarding Supply and Demand Side WUE Efforts

1. Conservation education developed for staff and public
2. Staff education to recognize water misuse.
3. Indoor and outdoor water conservation kits for single and multi-family homes.
4. Hydrant meter rental for construction sites.
5. Reclaimed water-use at the City's WWTP.
6. Leak detection was done to an other 20% of the water system this last year.

Describe Progress in Reaching Goals:

- Estimate how much water you saved.
- Report progress toward meeting goals within your established timeframe.
- Identify any WUE measures you are currently implementing.
- If you established a goal to maintain a historic level (such as maintaining daily consumption at 65 gallons per person per day for the next two years) you must explain why you are unable to reduce water use below that level.

The following questions will help DOH better understand water usage, water resources management and drought response. The data will be used to provide technical assistance, not for regulatory purposes.

All questions are voluntary

Month	Date of Measurement	Static Water Level (feet below measuring point)	Dynamic Water Level (feet below measuring point)
January			
February			
March			
April			
May			
June			
July			
August			
September			
October			
November			
December			

Water level data:

Please provide the following information (if known) to help us better utilize the water level data.

Well tag Id number:

Well depth:

Water level accuracy (within 0.01 ft < 1 ft ~ 1 ft)

Completion type (e.g., cased open interval, cased open-ended, cased open-ended with perforations, etc…)

Location coordinates (latitude, longitude) and accuracy of the coordinates (< 1ft, ~1ft, >1000ft)

Water level parameter name (e.g. depth below measuring point, depth below top of casing, depth below ground surface)

Elevation of top of casing OR elevation of measuring point if different than top of casing (as specified in question 7)

Monthly/Seasonal Water Usage:

What was your maximum daily water demand for the previous year (in gallons per day)?

Month	**Volume of Water Produced in gallons**
January	
February	
March	
April	
May	
June	
July	
August	
September	
October	
November	
December	

Water shortage response:

Did you activate any level of water shortage response plan the previous year?

- ☐ Yes
- ☑ No
- ☐ There was no need to

If you activated a water shortage response plan the previous year, what level did you activate? (Check all that apply)

- ☐ Advisory Conservation
- ☐ Voluntary Conservation
- ☐ Mandatory Conservation
- ☐ Rationing
- ☐ Other

What factors caused your water shortage the previous year?

- ☐ Drought
- ☐ Fire
- ☐ Landslides
- ☐ Earthquakes
- ☐ Flooding
- ☐ Water Supply Limitations
- ☐ Other

Do not mail, fax, or email this report to DOH

Washington State Department of Health
Division of Environmental Health
Office of Drinking Water

Date Submitted: 6/13/2023

Water Use Efficiency
Annual Performance Report - 2022

WS Name: MONROE WATER SYSTEM

Water System ID# : 55820 WS County: SNOHOMISH

Report submitted by: *Scott Barr*

Meter Installation Information:

Estimate the percentage of metered connections: *100%*

If not 100% metered – Did you submit a meter installation plan to DOH? No

Within your meter installation plan, what date did you commit to completing meter installation?

Current status of meter installation:

Production, Authorized Consumption, and Distribution System Leakage Information:

12-Month WUE Reporting Period *12/16/2021* To *12/15/2022*

Incomplete or missing data for the year? *Yes*

If yes, explain:

One of our master meters was down for a time so we are not showing an accurate amount of water purchased.

Total Water Produced & Purchased (TP) – Annual volume gallons	*746,320,740*	gallons	
Authorized Consumption (AC) – Annual Volume in gallons	*751,792,360*	gallons	
Distribution System Leakage – Annual Volume TP – AC	*-5,471,620*	gallons	
Distribution System Leakage – DSL = [(TP – AC) / TP] x 100 %	*-0.7 %*		
3-year annual average - %	*7.1 %*		*2018, 2019, 2020*

Goal-Setting Information:

Enter the date of most recent public forum to establish WUE goal: *12/22/2020*

Has goal been changed since last performance report? *No*

Note: Customer goal must be re-established every 6 years through a public process.

Customer WUE Goal (Demand Side):

The City of Monroe has co-adopted a regional goal with the Everett Water wholesale customers. The regional goal is to reduce the regional demand for water by 1.8 MGD by 2029.

Water level data:

Please provide the following information (if known) to help us better utilize the water level data.

Well tag Id number:

Well depth:

Water level accuracy (within 0.01 ft < 1 ft ~ 1 ft)

Completion type (e.g., cased open interval, cased open-ended, cased open-ended with perforations, etc...)

Location coordinates (latitude, longitude) and accuracy of the coordinates (< 1ft, ~1ft, >1000ft)

Water level parameter name (e.g. depth below measuring point, depth below top of casing, depth below ground surface)

Elevation of top of casing OR elevation of measuring point if different than top of casing (as specified in question 7)

Monthly/Seasonal Water Usage:

What was your maximum daily water demand for the previous year (in gallons per day)?

Month	**Volume of Water Produced in gallons**
January	
February	
March	
April	
May	
June	
July	
August	
September	
October	
November	
December	

Appendix W-E

Not Used

THIS PAGE INTENTIONALLY BLANK

Appendix W-F

City of Monroe – Water System Plan Update, Model Update & Calibration Memorandum

THIS PAGE INTENTIONALLY BLANK

MEMORANDUM

Date: June 26, 2024

To: Jakeh Roberts, PE; John Lande; City of Monroe

From: Ryan Jones, PE; BHC Consultants, LLC

Subject: City of Monroe – Water System Plan Update, Model Update, and Calibration

1. Introduction

This Memorandum documents the water system hydraulic model (model) updates and calibration prepared for the City of Monroe (City). The goal of this effort is to utilize the best available data provided by the City to update the existing model to better represent current system hydraulics and system demands, and then calibrate that model to hydrant flow test data collected by the City, for use in the planning level analysis supporting the City's Water System Plan Update. The digital representation of the City's model uses Autodesk, previously Innovyze, InfoWater Pro version 2024.0 and the EPANET Python Toolkit (EPyT) (Kyriakou, et al. 2023) which both utilize the EPA Net 2.2 hydraulic engine.

2. Model Updates

The City's water system model was updated based on the most current data provided by the City in the form of current Geographic Information System (GIS) data and record drawings for relevant capital improvement project completed since the previous water system plan. The model updates include a redistribution of customer account demands as well as updates to piping information and system facilities.

2.1 Model Hydraulic Updates

Based on the record drawings and GIS data, system piping information for pipe diameter, material, and year of installation were updated where possible. The nine (9) record drawings used to update the model are documented in Table 1.

Table 1
Plan Sets for Hydraulic Updates

Plan Set	Year of Installation
Doc 2 Reservoir	2022
182nd Avenue SE Watermain	2023
Graden Water Main Replacement	2018
Cascade View Drive Watermain Replacement	2018
Wagner Road Waterline Replacement	2024
Air Field Waterline Replacement Project	2018
Rainier View Road PRV Project 199th Avenue SE	2020
Rivmont Watermain Replacement Project	2016
Tester Road Watermain Replacement	2017

Through discussions with the City, Pressure Reducing Valve (PRV) stations were updated based on provided setting information, the Wagner South PRV Station (installed 2018) and 204th Avenue PRV Station (installed 2023), zone piping was updated to supplement GIS data, and facility operations were updated.

2.2 System Demand Updates

The City provided customer account information that included the account address, customer category and address for their approximately 8,000 metered connections. These accounts were geocoded using geopy and processed with geopandas (open-source Python libraries) to bring the customer accounts, codes, and 2023 consumption data together and represent this data spatially. Transmission mains and facilities piping were assigned a zone designation of "exclude" so that customer accounts would not be allocated to these. The City's customer billing codes and the grouping into how these are represented in the model is included as Table 2, and Figure 1 shows the system demand summary in a pie chart. Figure 2**.** shows a portion of the system and how the customer demands are loaded to the model junctions.

Table 2
Demand Allocation Summary

Classification	Billing Codes[1]	Demand Code in Model	Percent of System Demand
Detached Residential (SFR)	RES-IN, RES-NOSWR-IN, RES-OUT, RES--OUT WATER-SEWER, RES-WTR ONLY-IN, WATER ONLY.	Demand 1	47.9%
Attached Residential (MFR)	MULTI(2-4)-RES-IN, MULTI(2-4)-RES-OUT, MULTI(2-4)R-NOSWR-IN, MULTI+5-RES-IN, MULTI+5-RES-NOSWR-IN, MULTI-NP-LW INCOM SR, MULTI-RES-NOSWR-IN.	Demand 2	9.0%
Non-Residential	RES&COMM-IN, RES&COMM-OUT, RES&COM-NOSWR-IN, MULTI 2 RES&1COMM-IN, C-IN, C-NOSWR-IN, C-OUT, C-WTR-SWR ONLY IN, MULTI-COM-OUT, MULTI-COM-IN, MULTI-COM-NOSWR-IN, C-CHNP-IN, C-CHNP-NOSWR-IN, C-CHNP-OUT, C-FG-NOSWR-OUT, C-FG-OUT, C-G-FD-IN, C-G-FD-NOSWR-IN, C-G-MONROE-IN, C-G-MONROE-NOSWR-IN, C-G-MONROE-PD-IN, C-SCHLS-G-VGH-NOSWR, C-SCHOOLS-G-VGH, C-SCHOOLS-IN, C-SCHOOLS-OUT, C-SHERIFF-DSTCRT-OUT, MULTI-G-IN, HYDMTR, IRR-FD-IN, IRR-G-IN IRR-IN, IRR-MONROE-IN, IRR-OUT, IRR-SCHOOLS-IN, VAC LOT-IN, VAC LOT-OUT, RES-CONST-IN, RES-CONST-OUT	Demand 3	43.1%

Note:
1) Billing codes for sewer only, stormwater only and other such codes that are used to track water for billing that do not receive water directly from the City are excluded from the demand allocation based on discussions with the City.

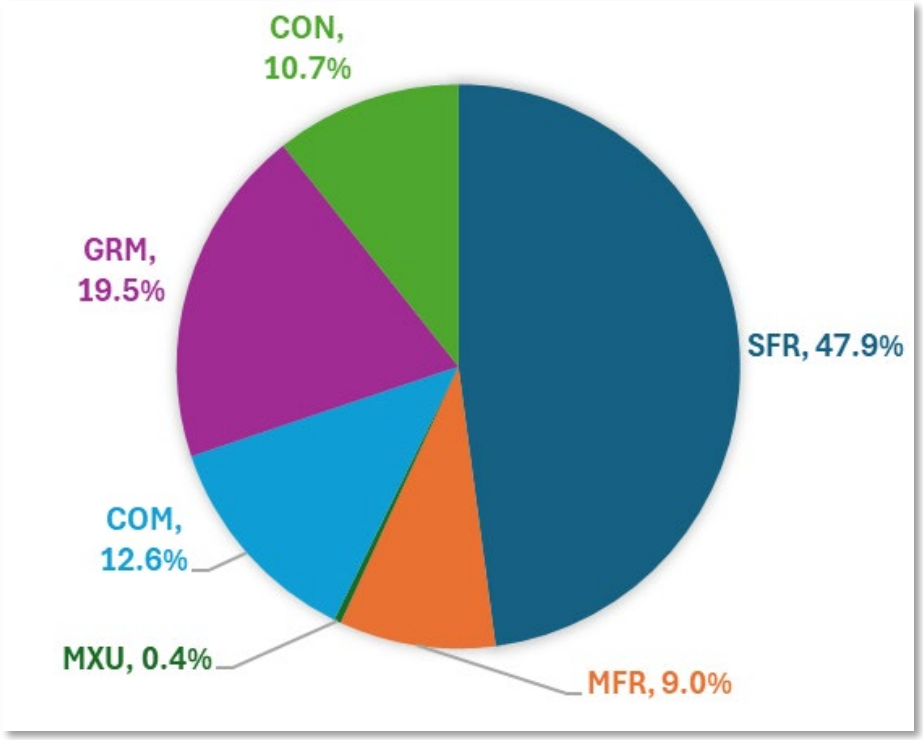

Figure 1 – System Demand Summary



Figure 2 – Demand Allocation in an Area with Multiple Customer Classes

3. Model Setup and Boundary Conditions

The City had tested hydrants prior to this effort at 27 locations on February 2, 2022, using fire trucks to pull large flows to stress the system. As these hydrants were all tested on the same day, these tests are assumed to be represented with consistent system demands and tank levels. Figure 3 shows the locations of these 27 considered hydrant locations with a test ID used in the results and calibration discussion.

The City is a wholesale customer of the City of Everett (Everett) and has three taps into Everett's Transmission Main No. 5. The Chain Lake and Wagner Road taps serve the 517 Zone without pressure or flow controls and the North Hill Tap serves the 635 Zone with a pump station control to serve the higher pressure zone. These connections do not have flow rate limit or daily not to exceed maximums from Everett and as such are left unbounded in the model. The system demand was determined from the flow metering at these three taps neglecting changes in storages during the day of hydrant flow testing. Table 3 shows the flow assumptions and head settings used to simulate the day of the hydrant test by Everett tap. Note that the taps are ordered from lowest elevation (east) to highest elevation (west). Though the City has some large customer entities, as these are treated as wholesale customers from the billing data, they are not considered separately and are scaled according to the total system demand.

Table 3
Calibration Source Inflow

Flows	Chain Lake Tap	North Hill Tap	Wagner Road Tap[1]	Sum[2]
2/2/2022 Flows (gpm)	342.86	72.21	767.27	1,182.34
2/2/2022 Head (ft NAVD88)[3]	519	520	522	-

Notes:
1) The meter for the Wagner Road tap was offline on the day of the test. The value used is informed by the average system usage on 2/1/2021 and 2/1/2023 and the reads from the Chain Lake and North Hill Tap.
2) The sum of flows is used to set the system demand for the test.
3) These heads were applied to allow the model to more closely resemble the flow contributions between the Chain Lake Tap and Wagner Road Tap based on discussions with the City.

Tank level data from the City's Supervisory Control and Data Acquisition (SCADA) system were also applied to the modeled system tanks for the hydrant tests. The levels summarized for each of the hydrant flow tests are included in Table 4. A constant tank level was assumed for the day of the hydrant flow tests for simplicity and due to the nature of the available of data.

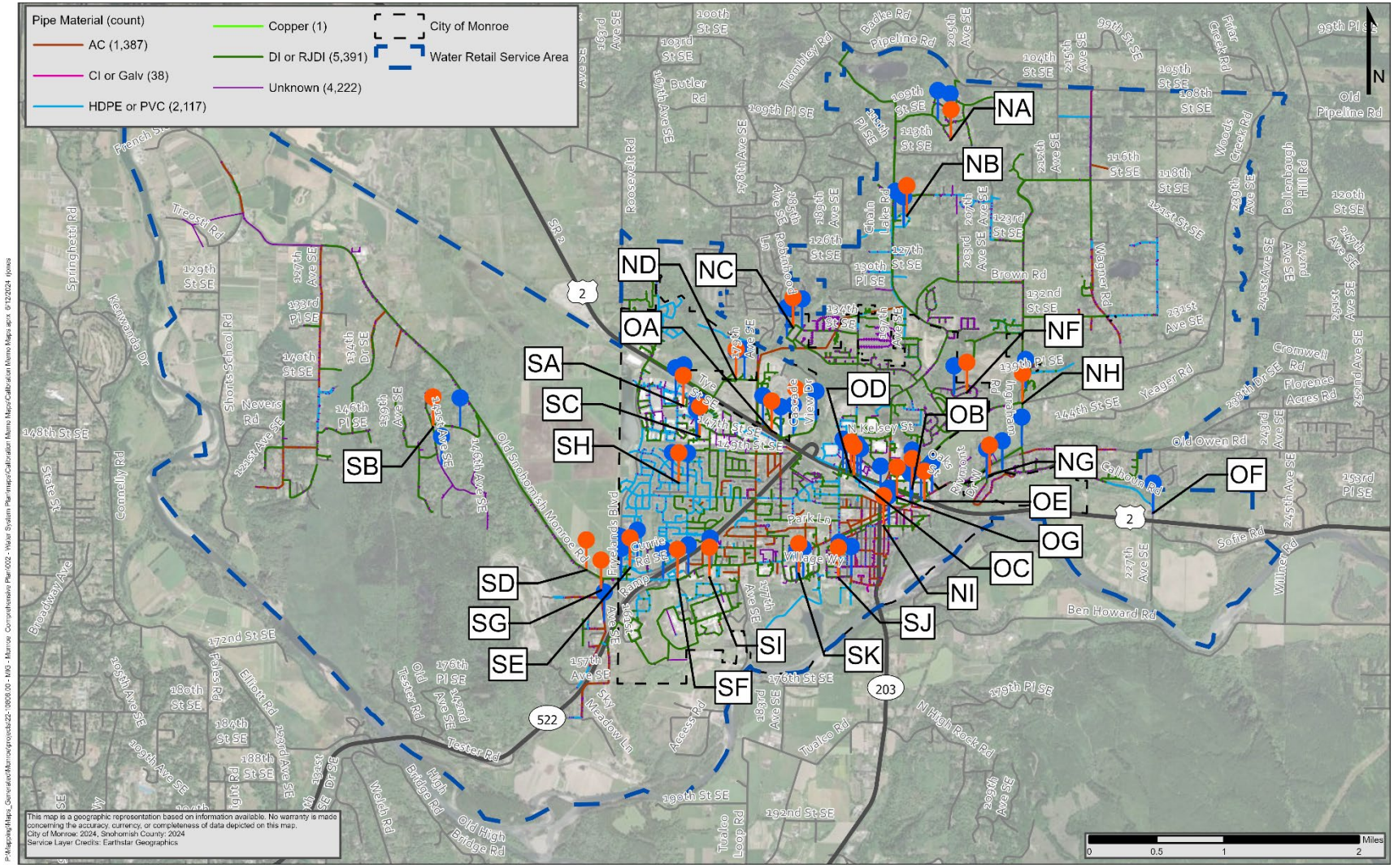

Figure 3 – Location of Hydrant Flow Tests

Table 4
Tank Levels for Calibration Period

Tank Campus	Number of Tanks at Campus	Average Tank Depth on 2/2/2022 (ft)[1]	Tank Head (ft NAVD88)
North Hill	1	83.00	635.00
Ingraham	1	21.00	297.00
Res 6 (DOC)	2	24.25	329.25
Res 5 (Trombley)	2	38.00	456.00
Lord Hill	2	26.00	563.00
Spring Hill	2	11.50	566.50

Note:
1) From sensor data; for tank campuses with two tanks, the tank head is shared between the two tanks, with the depth from the tank with a level sensor being used to calculate the depth in the other tank.

Each hydrant test includes a static simulation when no hydrants are flowing. This static simulation allows for assessment of the model hydraulics such as PRVs and pump operations that are not controlled as boundary conditions. The hydrant testing was performed with a single hydrant collecting pressure information and multiple hydrant connections at one or two flow hydrants simultaneously. With observed static pressure and residual pressure information, the model was set up to simulate these conditions allowing for comparisons of the static pressure, residual pressure and pressure drops for each of these tests. Table 5 collates the hydrant flow test data. The location of these tests is included in Figure 3 and hydrant pressures are included in the results presentation. The typical operational settings and inventory of assets by pressure zone is included as Attachment A.

Table 5
Hydrant Flow Test Data

Test ID	Pressure Zone	Pressure Hydrant (psi)	Flow Hydrant: Flow (gpm)
NA	NH635	NA-P-1	NA-F-1: 1,061 NA-F-2: 1,610
NB	W517	NB-P-1	NB-F-1: 531 NB-F-2: 1,162
NC	T458	NC-P-1	NC-F-1: 1,300 NC-F-2: 1,956
ND	AF430	ND-P-1	ND-F-1: 1,300 ND-F-2: 2,653
NE	D298	NE-P-1	NE-F-1: 1,186 NE-F-2: 1,838
NF	F440	NF-P-1	NF-F-1: 1,678
NG	RC330	NG-P-1	NG-F-1: 1,244 NG-F-2: 1,500
NH	RC330	NH-P-1	NH-F-1: 1,300 NH-F-2: 3,047
NI	D298	NI-P-1	NI-F-1: 1,061 NI-F-2: 1,838
OA	D298	OA-P-1	OA-F-1: 993 OA-F-2: 2,054
OB	D298	OB-P-1	OB-F-1: 1,244 OB-F-2: 1,678
OC	D298	OC-P-1	OC-F-1: 1,126 OC-F-2: 1,678
OD	D298	OD-P-1	OD-F-1: 919 OD-F-2: 1,832
OE	D298	OE-P-1	OE-F-1: 1,126 OE-F-2: 1,838
OF	SR252	OF-P-1	OF-F-1: 855
OG	D298	OG-P-1	OG-F-1: 1,126 OG-F-2: 2,187
SA	D298	SA-P-1	SA-F-1: 1,244 SA-F-2: 2,312
SB	SH565	SB-P-1	SB-F-1: 1,061 SB-F-2: 1,300
SC	D298	SC-P-1	SC-F-1: 1,353 SC-F-2: 1,678
SD	D298	SD-P-1	SD-F-1: 1,126 SD-F-2: 2,122
SE	D298	SE-P-1	SE-F-1: 993 SE-F-2: 2,122
SF	D298	SF-P-1	SF-F-1: 1,353 SF-F-2: 1,678
SG	DOC330	SG-P-1	SG-F-1: 1,678
SH	D298	SH-P-1	SH-F-1: 1,186 SH-F-2: 1,838
SI	D298	SI-P-1	SI-F-1: 1,838
SJ	D298	SJ-P-1	SJ-F-1: 1,061 SJ-F-2: 1,838
SK	D298	SK-P-1	SK-F-1: 993 SK-F-2: 1,838

4. Steady State Calibration Results

The 27 hydrant tests resulted in 54 unique model simulations. These simulations are controlled by the aforementioned model boundary conditions, and the results of this analysis focus on the observed pressure data measured in the field during the tests.

A common calibration technique is to move demand between zones; due to the available customer account information from the City, system demand was not manipulated as part of this calibration effort. The system pipe material and year of installation are the primary considerations for changing the pipe C values. Table 6 summarizes the length of modeled system piping by material and year of installation, and Table 7 summarizes the modeled C values by the system piping by material and year of installation. Note that this information is based on the best available data. There are planned efforts to update this information in the next few years which would be beneficial to include in the model and validate the calibration in the future.

Table 6
Pipe Material and Installation Year per City GIS Data

Year of Installation	AC	CI	DI	PVC	Steel	UNK	Sum of Piping	Percent of System
< 1950	13.86	0.16	32.18	7.39	0.11	9.51	63.23	47.0%
1950 - 1960	2.38	-	1.29	< 0.1	-	-	3.68	2.7%
1960 - 1970	2.30	< 0.1	2.87	-	-	-	5.17	3.8%
1970 - 1980	1.95	-	-	< 0.1	-	-	1.95	1.5%
1980 - 1990	1.49	-	8.83	5.42	-	-	15.73	11.7%
1990 - 2000	0.98	-	11.10	16.86	-	-	28.94	21.5%
2000 - 2010	-	-	7.80	0.92	1.68	< 0.1	10.40	7.7%
2010 - 2020	0.27	-	3.37	0.42	-	< 0.1	4.06	3.0%
> 2020	-	-	1.23	-	-	< 0.1	1.23	0.9%
Sum of Piping (miles)	**23.2**	**0.2**	**68.7**	**31.0**	**1.8**	**9.5**	**135**	
Percent of System	**17%**	**0%**	**51%**	**23%**	**1%**	**7%**		**100%**

Table 7
Calibrated Model C Values Summarized by Installation Year

Installation Year	AC	CI	DI	PVC	Steel	UNK
< 1950	130,140	125	125,135	150	140	135
1950 - 1960	130	-	135	150	-	-
1960 - 1970	130	125	135	-	-	-
1970 - 1980	135	-	-	150	-	-
1980 - 1990	135	-	135,140	150	-	-
1990 - 2000	135	-	135,140	150	-	-
2000 - 2010	-	-	135,140	150	140	135
2010 - 2020	135	-	135,140	150	-	135
2020 - 2030	-	-	140	-	-	135

General guidelines for calibration accuracy have not been adopted by the industry, but the American Water Works Association (AWWA) M32 Computer Modeling of Water Distribution Systems (American Water Works Association 2017) does list an unadopted consideration as follows:

- High Accuracy: HGL +/- 5 feet (2.2 psi) use for design and operations evaluations.
- Lower Accuracy: HGL +/- 10 feet (4.3 psi) use for long range and master planning.

These criteria are considered in the calibration results for the static and residual pressures as well as the drop in pressure. In addition to these criteria, the static and residual pressures are assessed on the percent difference between the observed and simulated pressures, and classified as within +/- 5%, 10%, and 15% also noting hydrant test with results outside of this tolerance.

The comparison of the observed pressure and the simulated pressure were compared in a tabular form and graphically on a per test basis and on a global basis. An example of the individual hydrant flow test result is shown in Figure 4; this figure shows how the compares the observed and simulated static and residual pressures while also showcasing the pressures drop between them for hydrant flow test SH.

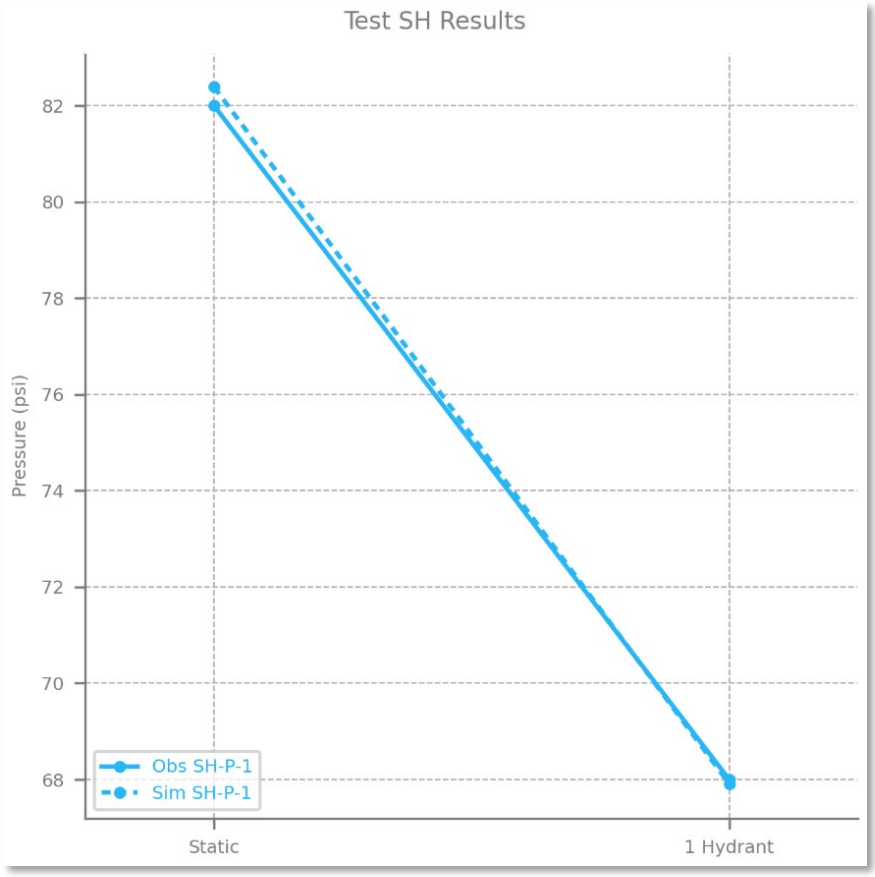

Figure 4 – Individual Hydrant Flow Test Pressure Results for Test SH

Table 8 shows the observed and simulated pressure for the static pressure, the residual pressure, and the drop in pressure for of the 27 hydrant flow tests. Attachment B includes the full set of individual hydrant flow test figures as well as graphical representations of the information included in Table 8. Table 9 shows the counts of tests meeting the aforementioned suggested criteria.

Table 8
Observed and Simulated Hydrant Pressure Summary Table

Test ID	Zone ID	Press Hydrant ID	Static Pressure Condition			Residual Pressure Condition				Drop in Pressure During Test			
			Observed Pressure (psi)	Simulated Pressure (psi)	Difference (obs-sim) (psi)	Percent Difference $\left(\frac{100*(sim-obs)}{obs}\right)$	Observed Pressure (psi)	Simulated Pressure (psi)	Difference (obs-sim) (psi)	Percent Difference $\left(\frac{100*(sim-obs)}{obs}\right)$	Observed Pressure (psi)	Simulated Pressure (psi)	Difference (obs-sim) (psi)
NA	NH635	NA-P-1	49.0	46.9	2.1	-4%	47.0	42.1	4.9	-10.4%	-2.0	-4.8	2.8
NB	W517	NB-P-1	30.0	22.5	7.5	-25%	18.0	11.4	6.6	-36.7%	-12.0	-11.1	-0.9
NC	T458	NC-P-1	88.0	81.5	6.5	-7%	65.0	48.3	16.7	-25.7%	-23.0	-33.2	10.2
ND	AF430	ND-P-1	105.0	106.6	-1.6	2%	85.0	93.6	-8.6	10.1%	-20.0	-12.9	-7.1
NE	D298	NE-P-1	78.0	90.9	-12.9	17%	68.0	57.0	11.0	-16.2%	-10.0	-33.9	23.9
NF	F440	NF-P-1	66.0	55.7	10.3	-16%	30.0	43.1	-13.1	43.7%	-36.0	-12.6	-23.4
NG	RC330	NG-P-1	82.0	87.0	-5.0	6%	30.0	31.8	-1.8	6.0%	-52.0	-55.1	3.1
NH	RC330	NH-P-1	122.0	121.3	0.7	-1%	80.0	72.2	7.8	-9.8%	-42.0	-49.1	7.1
NI	D298	NI-P-1	69.0	71.3	-2.3	3%	53.0	55.2	-2.2	4.2%	-16.0	-16.1	0.1
OA	D298	OA-P-1	80.0	91.4	-11.4	14%	63.0	32.9	30.1	-47.8%	-17.0	-58.4	41.4
OB	D298	OB-P-1	64.0	72.2	-8.2	13%	58.0	66.2	-8.2	14.1%	-6.0	-6.1	0.1
OC	D298	OC-P-1	66.0	71.7	-5.7	9%	56.0	63.8	-7.8	13.9%	-10.0	-7.9	-2.1
OD	D298	OD-P-1	70.0	72.0	-2.0	3%	58.0	65.5	-7.5	12.9%	-12.0	-6.5	-5.5
OE	D298	OE-P-1	66.0	73.5	-7.5	11%	56.0	66.8	-10.8	19.3%	-10.0	-6.6	-3.4
OF	SR252	OF-P-1	65.0	73.3	-8.3	13%	20.0	17.8	2.2	-11.0%	-45.0	-55.5	10.5
OG	D298	OG-P-1	68.0	71.5	-3.5	5%	60.0	63.6	-3.6	6.0%	-8.0	-7.9	-0.1
SA	D298	SA-P-1	85.0	84.9	0.1	0%	63.0	73.7	-10.7	17.0%	-22.0	-11.1	-10.9
SB	SH565	SB-P-1	100.0	102.0	-2.0	2%	71.0	81.3	-10.3	14.5%	-29.0	-20.7	-8.3
SC	D298	SC-P-1	82.0	84.5	-2.5	3%	68.0	72.8	-4.8	7.1%	-14.0	-11.7	-2.3
SD	D298	SD-P-1	80.0	67.3	12.7	-16%	62.0	61.4	0.6	-1.0%	-18.0	-5.9	-12.1
SE	D298	SE-P-1	84.0	79.0	5.0	-6%	51.0	59.7	-8.7	17.1%	-33.0	-19.3	-13.7
SF	D298	SF-P-1	77.0	68.9	8.1	-11%	55.0	45.8	9.2	-16.7%	-22.0	-23.1	1.1
SG	DOC330	SG-P-1	100.0	115.8	-15.8	16%	45.0	23.5	21.5	-47.8%	-55.0	-92.3	37.3
SH	D298	SH-P-1	82.0	82.4	-0.4	0%	68.0	67.9	0.1	-0.1%	-14.0	-14.5	0.5
SI	D298	SI-P-1	74.0	63.6	10.4	-14%	45.0	48.5	-3.5	7.8%	-29.0	-15.1	-13.9
SJ	D298	SJ-P-1	64.0	76.1	-12.1	19%	44.0	44.4	-0.4	0.9%	-20.0	-31.7	11.7
SK	D298	SK-P-1	74.0	73.1	0.9	-1%	48.0	43.5	4.5	-9.4%	-26.0	-29.6	3.6
Average			**76.7**	**76.3**	**-1.4**	**1%**	**54.3**	**53.8**	**0.5**	**-1.4%**	**-22.3**	**-24.2**	**1.8**

Table 9
Calibration Results Summary

Test Criteria	System Pressure Count of Tests Within			System Pressure Count of Tests With % Difference[1]			
	+/- 5 psi	+/- 10 psi	Not within 10 psi	+/- 5%	+/- 10%	+/- 15%	Not within 15%
Static Pressure	8	11	16	10	15	21	6
Residual Pressure	4	8	11	4	10	17	10
Drop in Pressure	7	12	13				

Note:
1) Percentage (%) difference is calculated as 100* (simulated/observed – 1) and is not included for the drop in pressure as these values are small making this statistic conservative.

To supplement Table 9, Table 10 summarizes how many criteria are being met by test. The five points of comparison are static pressure, residual pressure, and drop in pressure within +/- 10psi and static pressure and residual pressure within +/-10%. Figure 5 shows the percent of the considered tests in a pie chart.

Table 10
Test ID summary by Considered Criteria

Meeting	Count of Tests	Test IDs	Percent of Considered Tests
0 / 5 Criteria	4	NE, NF, OA, SG	15%
1 / 5 Criteria	7	NB, NC, OB, OE, OF, SE, SF	26%
2 / 5 Criteria	8	ND, OC, OD, SA, SB, SD, SI, SJ	30%
3 / 5 Criteria	2	NA, NH	7%
4 / 5 Criteria	3	NG, SC, SK	11%
5 / 5 Criteria	3	NI, OG, SH	11%

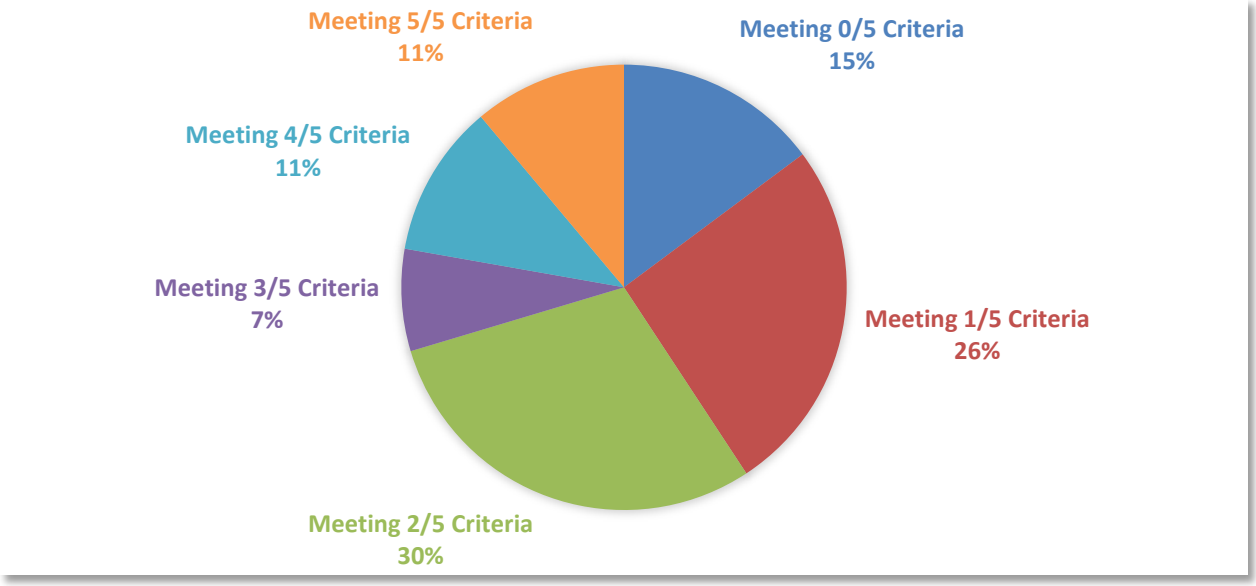

Figure 5 – Hydrant Tests Summary by Considered Criteria

5. Summary and Limitations

Typical water system model calibrations have been limited to considering around six (6) hydrant flow tests due to the level of effort. With the automation methods employed for this calibration, each of the 27 hydrant tests are considered with a similar level of effort which allows this analysis to consider the system more wholistically. There are sources of uncertainty in the analysis related to the precision in testing equipment (observed pressures rounded to the nearest psi), tank levels averaged for the day of testing, uncertainty in the head at the Everett taps, and the pipe diameter, material, and year of installation in the City's GIS data. This calibration process was useful in updating the model hydraulics based on the observed tests, and though not all tests fall within the ideal range, the calibration represents the City's physical system well.

Hydrant test SG has an over-simulated static pressure and an under-simulated residual pressure leading to the largest drop in pressure across the considered tests and is a test that did not meet any of the considered criteria. This is the only hydrant test considered in the Washington State Department of Corrections (DOC) 330 zone and is at the far end of the system at a dead end as the PRV station to the north (Old Snohomish – Monroe Road PRV Station) only supports flow from the DOC 330 zone to the Downtown 298 zone. As part of the calibration effort, the DOC tanks and the pump stations serving this zone as well as the hydraulics conveying flows from east to west across the zone were scrutinized and attributes were updated as needed. Though this test does not meet the considered criteria, the calibration effort has resulted in a much better understanding of the system settings for the calibrated model.

The same considerations for hydrant test SG were applied to each of the hydrant tests included in this analysis. Some tests over-simulate the observed data and some test under-simulate the observed data. For example, tests SI and SJ show results that has one over simulating the static pressure with the other under simulating the static pressure and the residual pressure shows the inverse. The calibration parameters were chosen to balance them in the context of the full 27 hydrants considered instead of biasing the model to accommodate the individual tests.

Without removing any tests when calculating the average difference and percent difference between observed and simulated, the averaged values were all within +/- 2 psi and +/- 2%. This system consideration supplemented by the level of agreement in the observed and simulated data on an individual test basis, this effort has achieved a good calibration of the City's water distribution system. Even so, Capital Improvement Plan (CIP) projects developed based on pressure and fire flow deficiencies that are close to the deficiency criteria thresholds will benefit from comparison with known or expected areas of deficiencies. This comparison will support the City in bridging the gap between model uncertainty and known operations to better understand the system for critical decision making and effective use of funding.

6. References

American Water Works Association. 2017. *M32 Computer Modeling of Water Distribution Systems Fourth Edition.* Denver: American Water Works Association.

Kyriakou, Marios S., Marios Demetriades, Vrachimis G. Stelios, and Marios M. Polycarpou. 2023. *Open Water Analytics / EPyT.* https://doi.org/10.5281/zenodo.8277487.

Mays, Larry W. 2011. *Water Resources Engineering.* Hoboken, NJ: John Wiley and Sons Inc.

7. Attachments

- Attachment A – City of Monroe Water System Settings Description
- Attachment B – Calibration Figures and Visualizations

ATTACHMENT A

City of Monroe Water System Settings Description

Pressure Zone	Min Elevation (ft NAVD88)	Max Elevation (ft NAVD88)	ID	Type	U/S Zone	D/S Zone	Model Description	Facility Name	Elevation (ft NAVD88)	Diameter	Setting (psi)	Setting HGL (ft)	Setting (gpm)	Tank Height (ft)	Tank Overflow (ft NAVD88)
AF430	36.7	146.5													
		Valves	PRV_AIRPORT_LAG	Pressure Reducing Valve	T458	AF430	Airport 10"	Airport PRV Station	47.62	10-inch	100	278.39			
			PRV_AIRPORT_LEAD	Pressure Reducing Valve	T458	AF430	Airport 2"	Airport PRV Station	47.55	3-inch	105	289.86			
		Pumps	None												
		Tanks	None												
D298	22.7	119.9													
		Valves	PRV_CHAIN_LAKE_SOUTH_LAG1	Pressure Reducing Valve	F440	D298	Chain Lake Kelsey 6" Bypass	Chain Lake South PRV Station	140.09	6-inch	35	220.86			
			PRV_CHAIN_LAKE_SOUTH_LAG2	Pressure Reducing Valve	F440	D298	Chain Lake Kelsey 12"	Chain Lake South PRV Station	140.25	12-inch	30	209.48			
			PRV_CHAIN_LAKE_SOUTH_LEAD	Pressure Reducing Valve	F440	D298	Chain Lake Kelsey 4" - Pressure Relief	Chain Lake South PRV Station	141.32	2-inch	40	233.63			
			PRV_DOC	Pressure Reducing Valve	DOC330	D298	New Valve	177th Pump Station	58.39	12-inch	45	162.24			
			PRV_FAIGROUNDS_LAG1	Pressure Reducing Valve	T458	D298	Fairgrounds 6"	Fairgrounds PRV Station	45.71	6-inch	90	253.40			
			PRV_FAIGROUNDS_LAG2	Pressure Reducing Valve	T458	D298	Fairgrounds 2" Bypass	Fairgrounds PRV Station	46.45	8-inch	85	242.60			
			PRV_FAIGROUNDS_LEAD	Pressure Reducing Valve	T458	D298	New Valve	Fairgrounds PRV Station	44.29	2-inch	95	263.52			
			PRV_FOOTHILLS_LAG	Pressure Reducing Valve	AF430	D298	Foothills 8"	Foothills PRV Station	46.95	8-inch	75	220.03			
			PRV_FOOTHILLS_LEAD	Pressure Reducing Valve	AF430	D298	Foothills 2" Bypass	Foothills PRV Station	46.75	2-inch	80	231.37			
			PRV_OLD_OWEN_RD_LAG	Pressure Reducing Valve	RC330	D298	Old Owen	Old Owen Road PRV Station	69.96	10-inch	65	219.96			
			PRV_OLD_OWEN_RD_LEAD	Pressure Reducing Valve	RC330	D298	Old Owen 4" Bypass	Old Owen Road PRV Station	68.47	4-inch	70	230.01			
			PRV_OLD_SNO-MON_RD_LAG	Pressure Reducing Valve	DOC330	D298	161st Ave SE 6"	Old Sno-Mon Rd PRV Station	65.90	6-inch	70	227.44			
			PRV_OLD_SNO-MON_RD_LEAD	Pressure Reducing Valve	DOC330	D298	New Valve	Old Sno-Mon Rd PRV Station	65.89	2-inch	60	204.35			
			PRV_TESTER_RD	Pressure Reducing Valve	DOC330	D298	New Valve	Tester Road Pump Station	55.71	8-inch	45	159.56			
			PRV_WOODS_CREEK_LAG	Pressure Reducing Valve	WC298	D298	Oaks @ Woodscreek 3"	Wood Creek PRV Station	79.36	8-inch	68	236.28			
			PRV_WOODS_CREEK_LEAD	Pressure Reducing Valve	WC298	D298	Oaks @ Woodscreek 8"	Wood Creek PRV Station	79.21	3-inch	72	245.36			
		Pumps	None												
		Tanks	None												
DOC330	46.9	237.0													
		Valves	None												
		Pumps	PS_177TH_LAG		D298	DOC330	177th to DOC (Redundant)	177th Pump Station							
			PS_177TH_LEAD		D298	DOC330	177th Booster PS	177th Pump Station							
			PS_TESTER_ROAD_LAG		D298	DOC330	Tester Rd (Redundant)	Tester Road Pump Station							
			PS_TESTER_ROAD_LEAD		D298	DOC330	Tester Road Booster	Tester Road Pump Station							
		Tank	TANK_DOC	Cylindrical			DOC in	DOC Tank Campus	280	50-feet				55	335
			TANK_DOC_2	Cylindrical			BHC; Update per M2019-0007 plans; 2024, RJ	DOC Tank Campus	305	73-feet				27	332
F440	147.0	274.5													
		Valves	PRV_199TH_AVE_LAG	Pressure Reducing Valve	W517	F440	BHC; Update per Rainier ViewRd PRVprj 199thAvSE; 2024, SG	199th Ave PRV Station	275.53	8-inch	50	390.91			
			PRV_199TH_AVE_LEAD	Pressure Reducing Valve	W517	F440	BHC; Update per Rainier ViewRd PRVprj 199thAvSE; 2024, SG	199th Ave PRV Station	275.74	3-inch	55	402.66			
			PRV_CHAIN_LAKE_NORTH_LAG	Pressure Reducing Valve	W517	F440	Chain Lake North 8"	Chain Lake North PRV Station	270.84	8-inch	55	397.76			
			PRV_CHAIN_LAKE_NORTH_LEAD	Pressure Reducing Valve	W517	F440	Chain Lake North 3"	Chain Lake North PRV Station	270.62	3-inch	60	409.08			
		Pumps	None												
		Tank	None												
L442	272.6	278.3													
		Valves	PRV_ING_LOCAL_LAG	Pressure Reducing Valve	WC298	L442	Local Service 4"	Ingraham Hill Tank Campus	272.56	4-inch	60	411.02			
			PRV_ING_LOCAL_LEAD	Pressure Reducing Valve	WC298	L442	Local Service 2" Bypass	Ingraham Hill Tank Campus	272.62	2-inch	70	434.16			
		Pumps	None												
		Tank	None												
LH260	106.2	109.1													
		Valves	PRV_134TH_DR_NORTH	Pressure Reducing Valve	D298	LH260	New Valve	Lord Hill Pump Station	107.58	2-inch	60	246.04			
			PRV_134TH_DR_SOUTH_LAG	Pressure Reducing Valve	LH565	LH260	134th Dr SE 2" - Pressure Relief	134th Dr South PRV Station	106.74	3-inch	65	256.74			
			PRV_134TH_DR_SOUTH_LEAD	Pressure Reducing Valve	LH565	LH260	New Valve	134th Dr South PRV Station	106.41	1-inch	70	267.95			
		Pumps	None												
		Tank	None												
LH350	114.1	278.4													
		Valves	PRV_127TH_AVE_LAG	Pressure Reducing Valve	LH565	LH350	127th Ave SE 4"	127th Ave PRV Station	283.79	4-inch	30	353.02			
			PRV_127TH_AVE_LEAD	Pressure Reducing Valve	LH565	LH350	127th Ave SE 2"	127th Ave PRV Station	285.26	2-inch	35	366.03			
		Pumps	None												
		Tank	None												

Pressure Zone	Min Elevation (ft NAVD88)	Max Elevation (ft NAVD88)	ID	Type	U/S Zone	D/S Zone	Model Description	Facility Name	Elevation (ft NAVD88)	Diameter	Setting (psi)	Setting HGL (ft)	Setting (gpm)	Tank Height (ft)	Tank Overflow (ft NAVD88)
LH565	231.5	535.1													
		Valves	None												
		Pumps	PS_LORD_HILL_LAG		D298	LH565	Lord Hill (Redundant)	Lord Hill Pump Station							
			PS_LORD_HILL_LEAD		D298	LH565	Lord Hill Booster	Lord Hill Pump Station							
		Tank	TANK_LORD_HILL_A	Cylindrical			Lord Hill A	Lord Hill Tank Campus	536.45	12-feet				30	566.45
			TANK_LORD_HILL_B	Cylindrical			Lord Hill B	Lord Hill Tank Campus	537	26-feet				30	567
NH635	379.8	550.8													
		Valves	None												
		Pumps	PS_NORTH_HILL_LAG		S	NH635	North Hill (Redundant)	North Hill Tap							
			PS_NORTH_HILL_LARGE		S	NH635	North Hill (Large)	North Hill Tap							
			PS_NORTH_HILL_SMALL		S	NH635	North Hill (Small)	North Hill Tap							
		Tank	TANK_NORTH_HILL	Cylindrical			North Hill	North Hill Tank Campu	547	45-feet				88	635
RC330	69.4	267.6													
		Valves	PRV_ING_CALHOUN_LAG	Pressure Reducing Valve	WC298	RC330	Calhoun 8"	Ingraham Hill Tank Campus	272.37	8-inch	40	364.68			
			PRV_ING_CALHOUN_LEAD	Pressure Reducing Valve	WC298	RC330	Calhoun 2" Bypass	Ingraham Hill Tank Campus	272.54	2-inch	48	383.31			
		Pumps	None												
		Tank	None												
SH565	224.7	555.4													
		Valves	None												
		Pumps	PS_SPRING_HILL_LAG		D298	SH565	Spring Hill (Redundant)	Spring Hill Pump Station							
			PS_SPRING_HILL_LEAD		D298	SH565	Spring Hill Booster	Spring Hill Pump Station							
		Tank	TANK_SPRING_HILL_A	Cylindrical			Spring Hill A	Spring Hill Tank Campus	555	26-feet				13	568
			TANK_SPRING_HILL_B	Cylindrical			Spring Hill B	Spring Hill Tank Campus	555	26-feet				13	568
SR252	78.0	113.3													
		Valves	PRV_CALHOUN_RD_LAG	Pressure Reducing Valve	RC330	SR252	Sofie Road 8"	Calhoun Road PRV Station	217.05	8-inch	13	247.05			
			PRV_CALHOUN_RD_PRV_LEAD	Pressure Reducing Valve	RC330	SR252	Sofie Rd 4"	Calhoun Road PRV Station	217.11	2-inch	18	258.65			
		Pumps	None												
		Tank	None												
T458	198.2	323.7													
		Valves	PRV_TROMBLEY	Pressure Reducing Valve	W517	T458	Trombley	Trombley Tank Campus	422.14	6-inch	15	456.76			
		Pumps	None												
		Tank	TANK_TROMBLEY_NO2	Cylindrical			Trombley in	Trombley Tank Campus	418	93-feet				45	463
			TANK_TROMBLEY_NO5	Cylindrical			Trombley #5	Trombley Tank Campus	417	98-feet				45	462
W517	247.5	449.7													
		Valves	FCV_CHAIN_LAKE_RD_TAP	Flow Control Valve	S	W517	New Valve	Chain Lake Road Tap	396.62	12-inch			2880		
			FCV_WAGNER_RD_TAP	Flow Control Valve	S	W517	North hill Flow Control Valve	Wagner Road Tap	487.41	12-inch			2000		
		Pumps	None												
		Tank	None												
WC298	80.3	260.8													
		Valves	PRV_COUNTY_CRESENT_LAG	Pressure Reducing Valve	F440	WC298	Farm East 10"	County Cresent PRV Station	181.37	10-inch	35	262.14			
			PRV_COUNTY_CRESENT_LEAD	Pressure Reducing Valve	F440	WC298	Farm East 3"	County Cresent PRV Station	181.37	3-inch	40	273.68			
			PRV_ING_WOODS_CREEK	Pressure Reducing Valve	WC298	WC298	Woods Creek 8"	Ingraham Hill Tank Campus	272.84	8-inch	10	295.92			
		Pumps	None												
		Tank	TANK_INGRAHAM_HILL	Cylindrical			Ingraham in	Ingraham Hill Tank Campus	276	120-feet				29	305
WN505	341.4	395.9													
		Valves	PRV_WAGNERNORTH_LAG	Pressure Reducing Valve	W517	WN505	New 8" 517 Zone PRV	Wagner North PRV Station	0.00	6-inch	55	126.92			
			PRV_WAGNERNORTH_LEAD	Pressure Reducing Valve	W517	WN505	New 8" 517 Zone PRV	Wagner North PRV Station	0.00	2-inch	60	138.46			
		Pumps	None												
		Tank	None												

ATTACHMENT B

Calibration Figures and Visualizations

Individual Calibration Plots 1 of 4

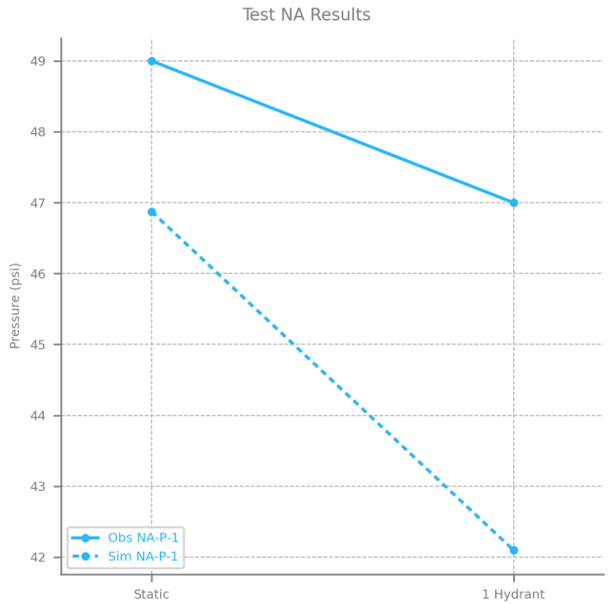

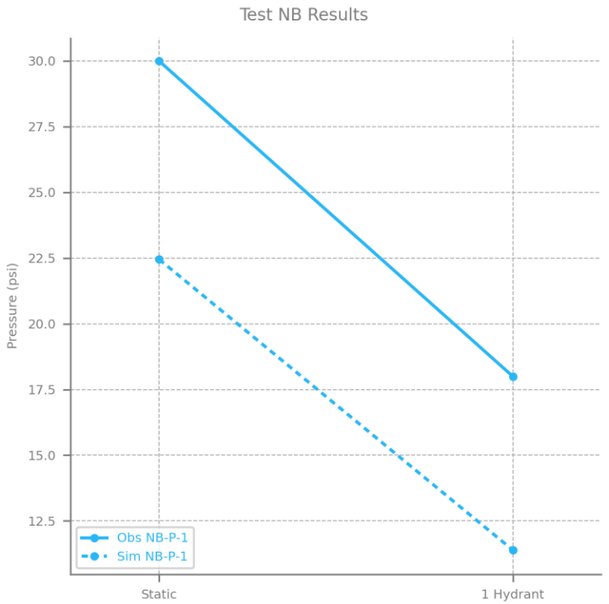

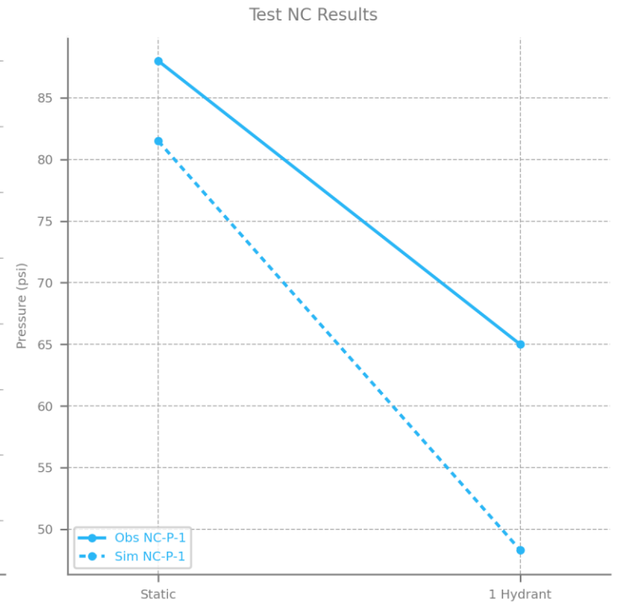

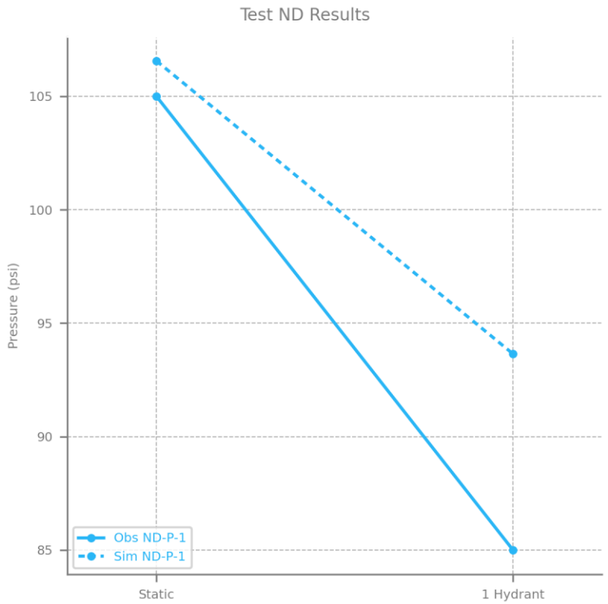

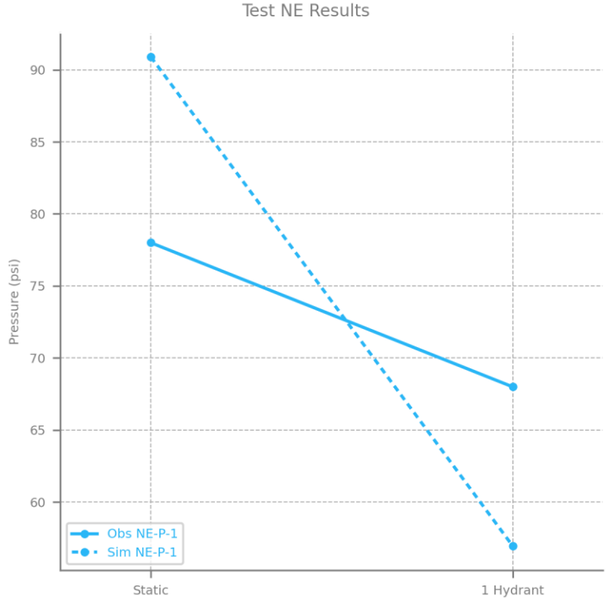

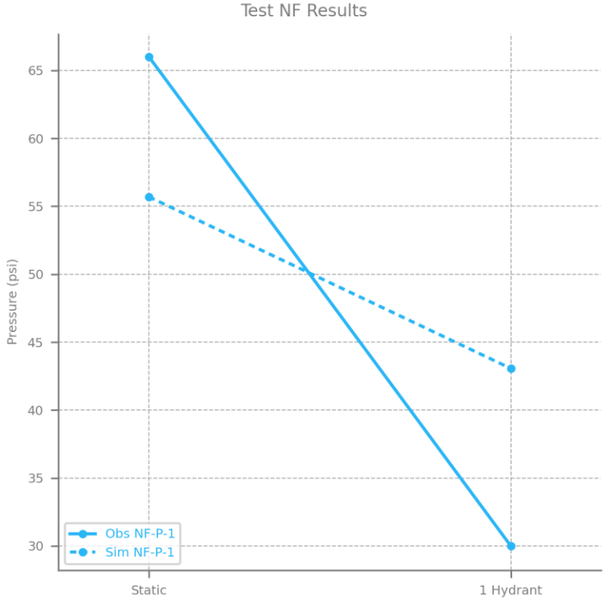

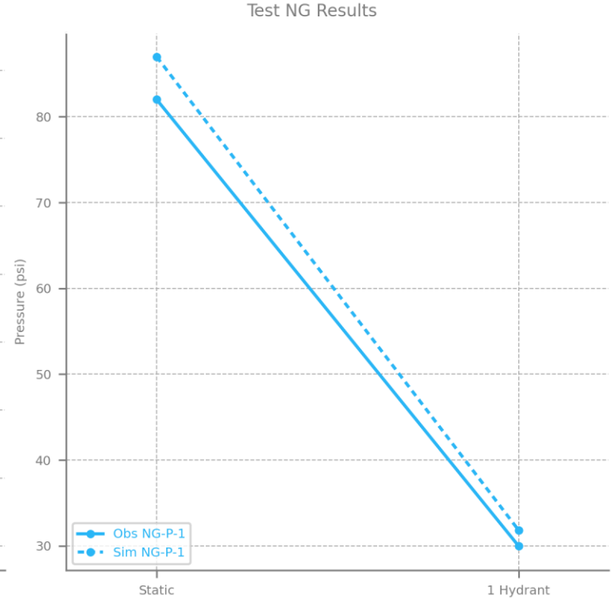

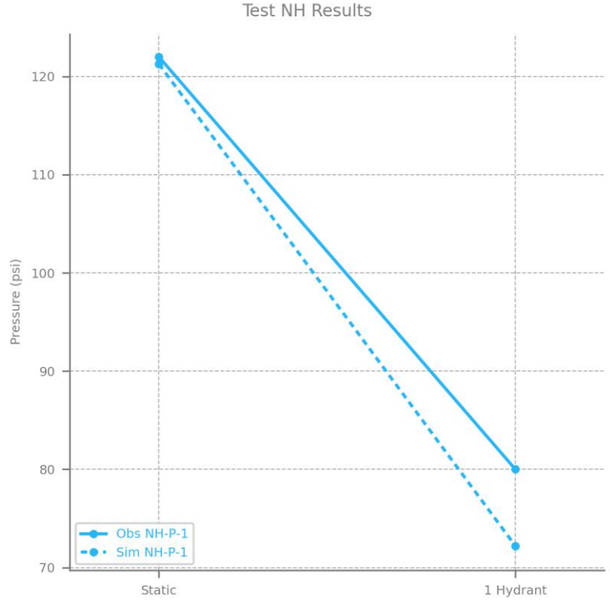

Individual Calibration Plots 2 of 4

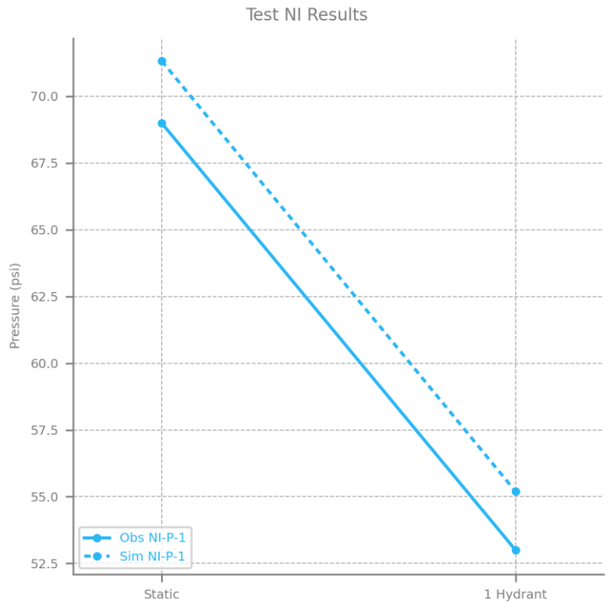

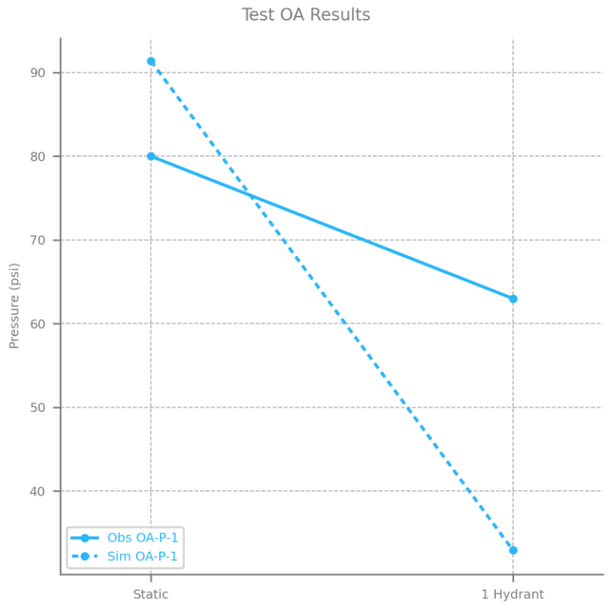

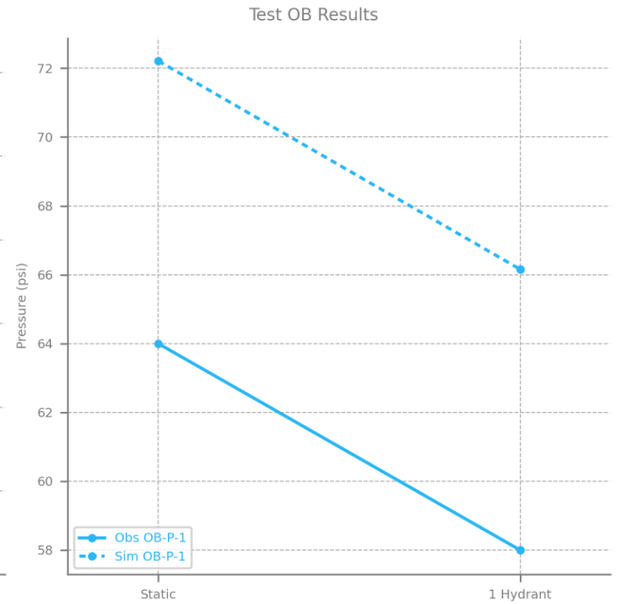

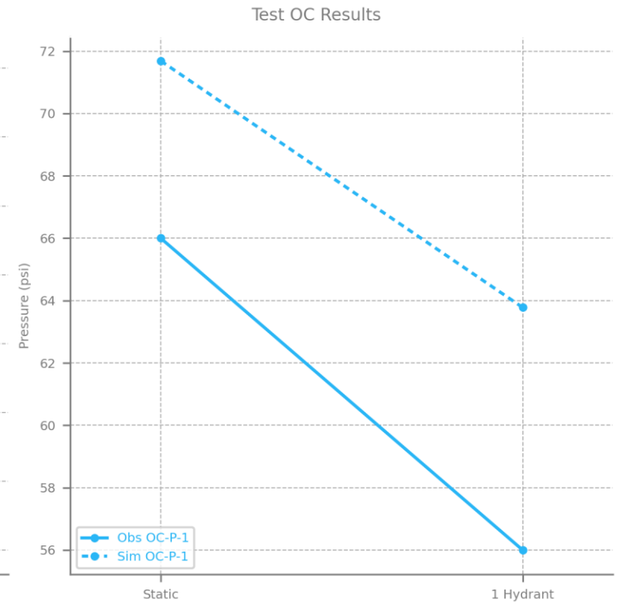

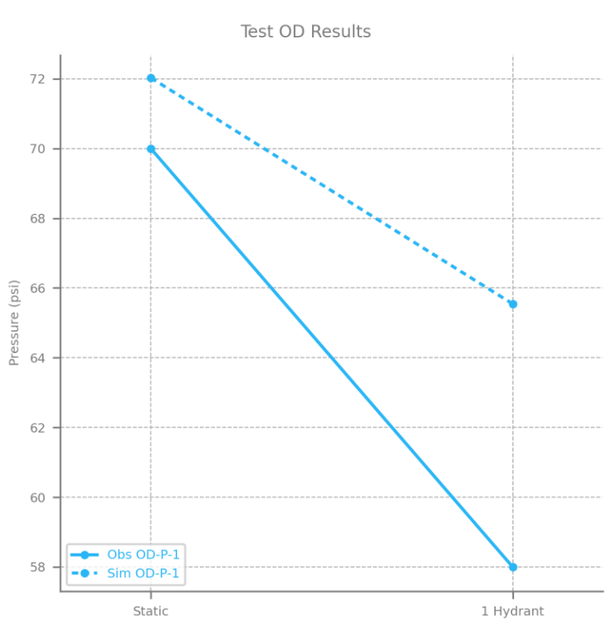

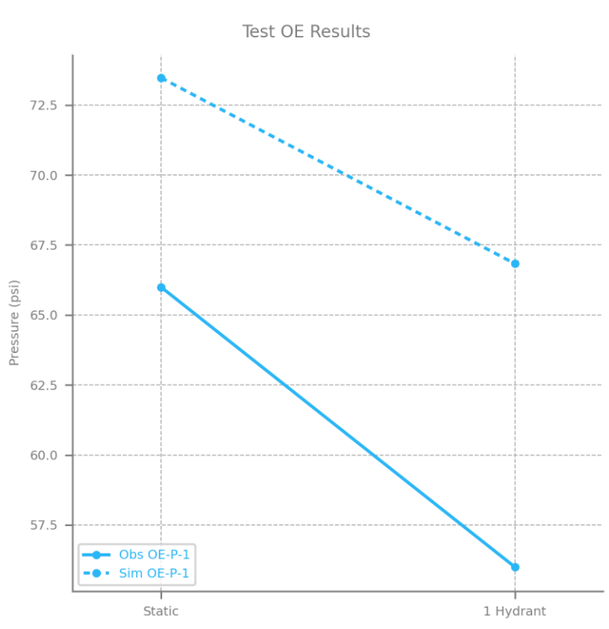

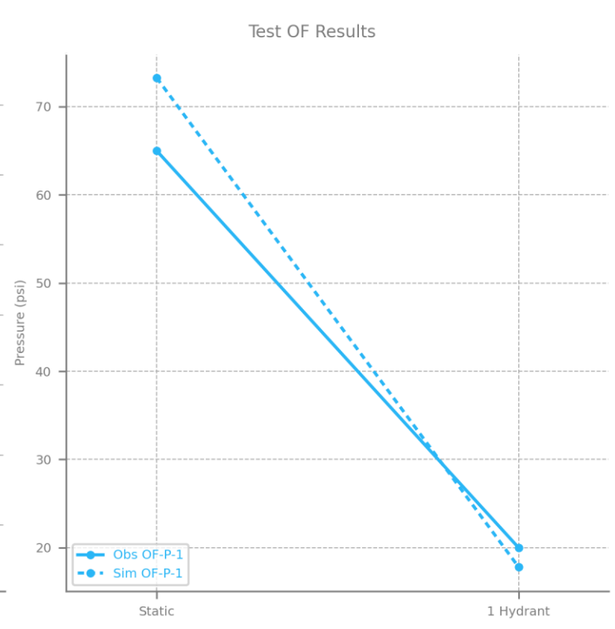

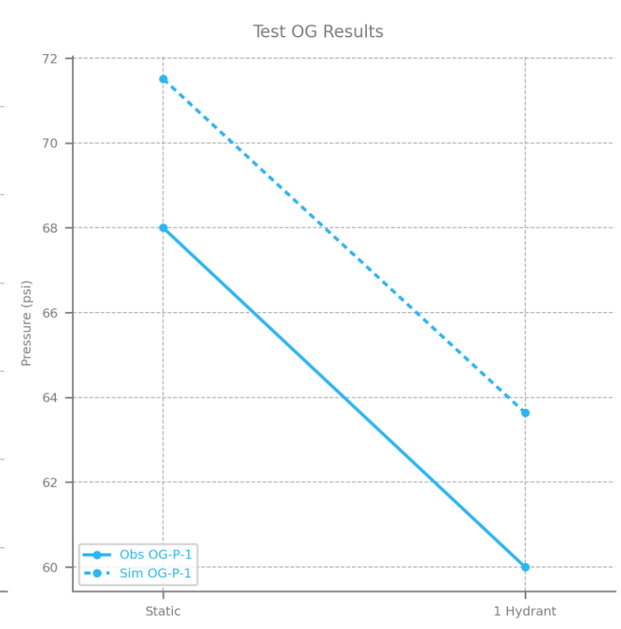

Individual Calibration Plots 3 of 4

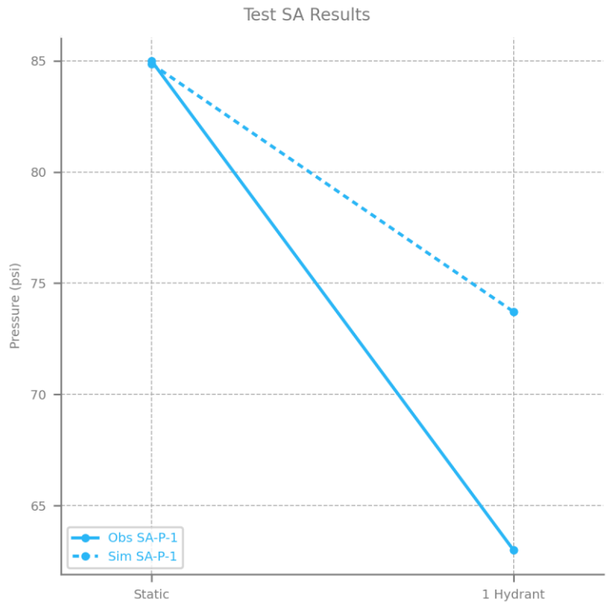

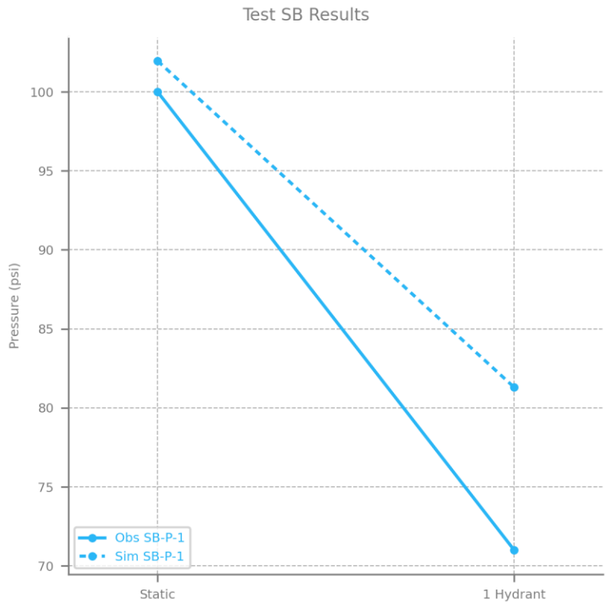

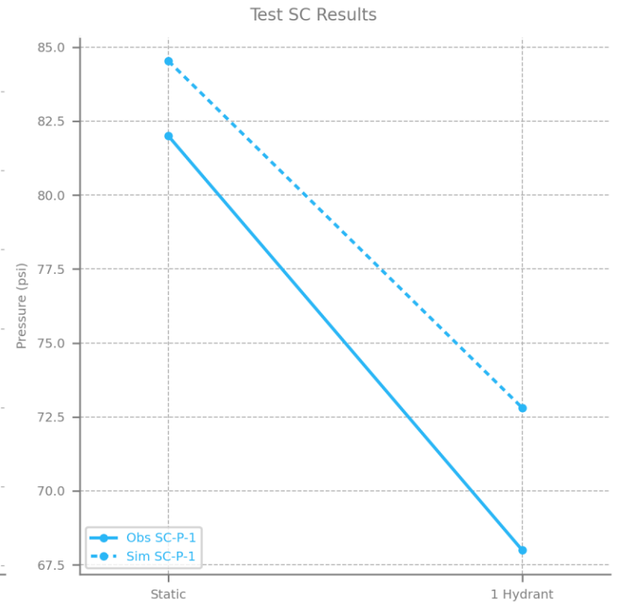

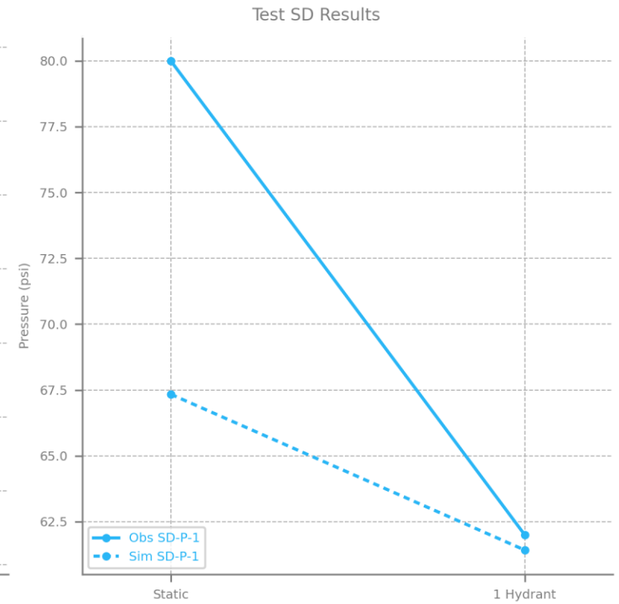

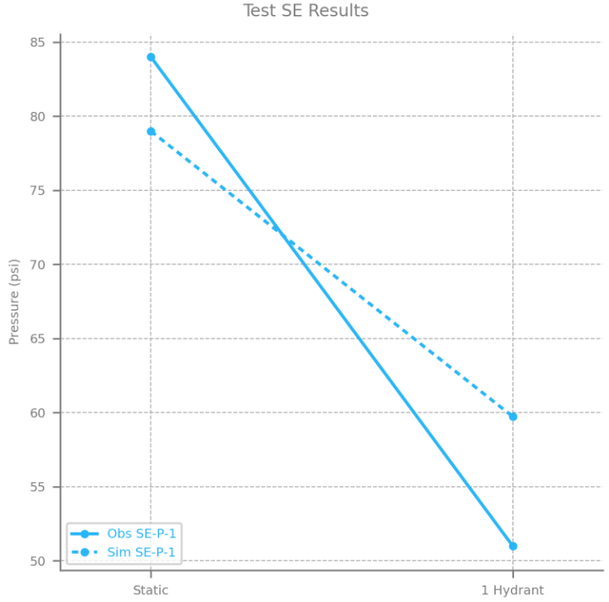

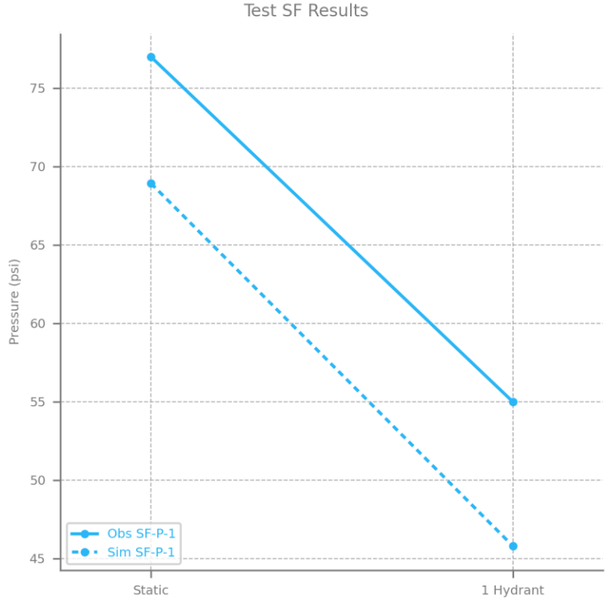

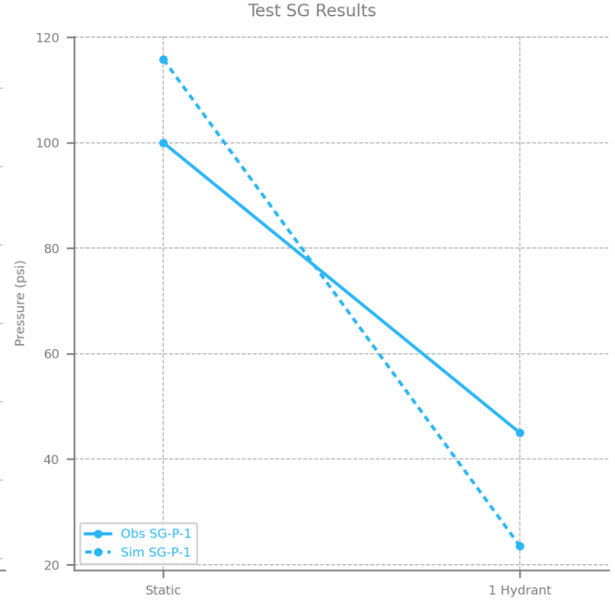

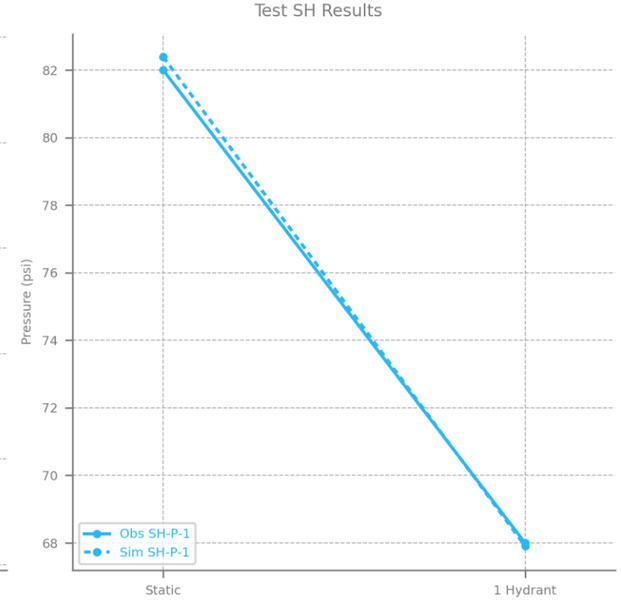

Individual Calibration Plots 4 of 4

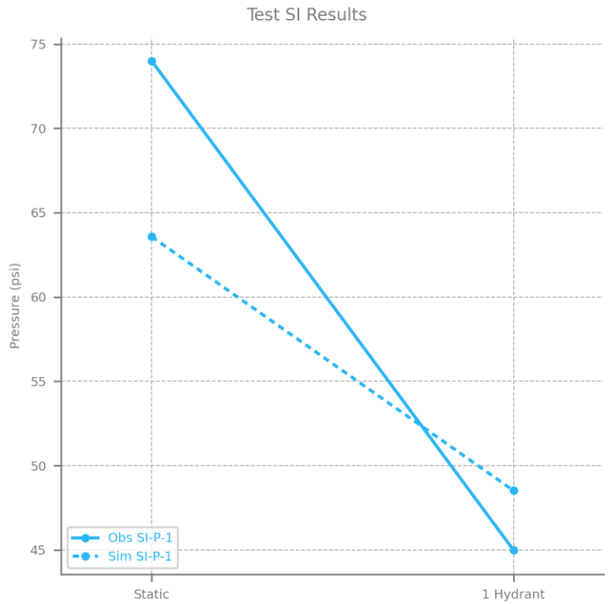

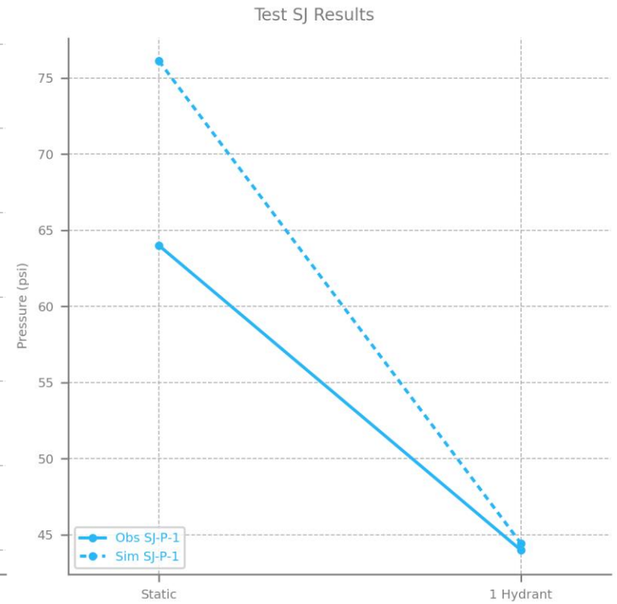

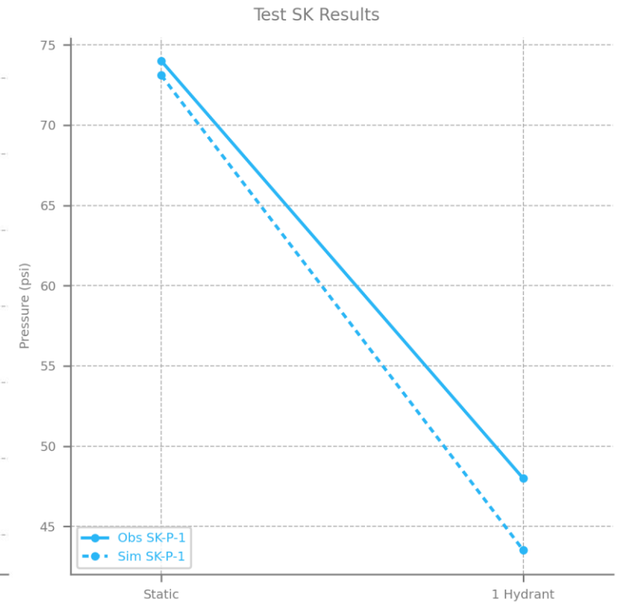

Visual Summary

Calibration

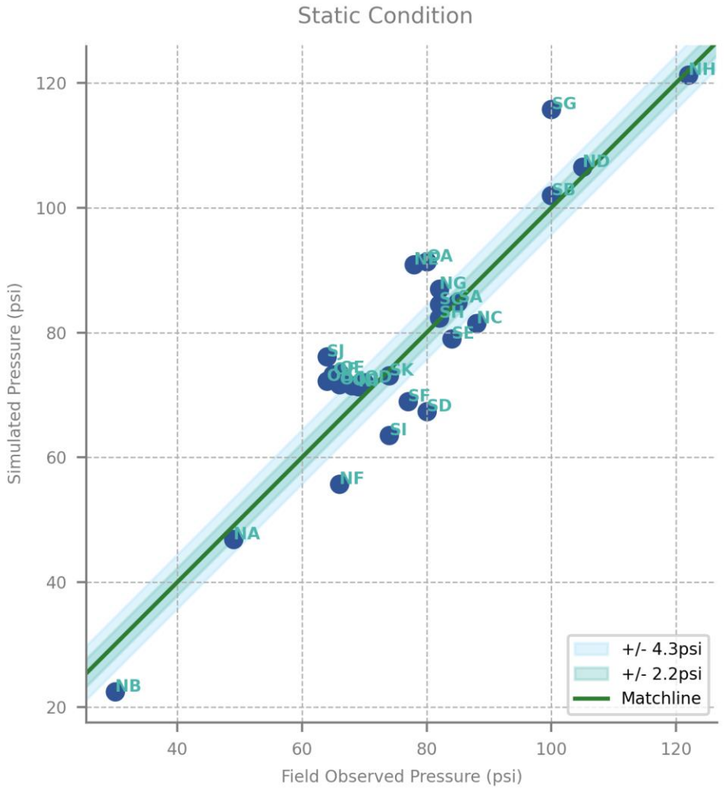

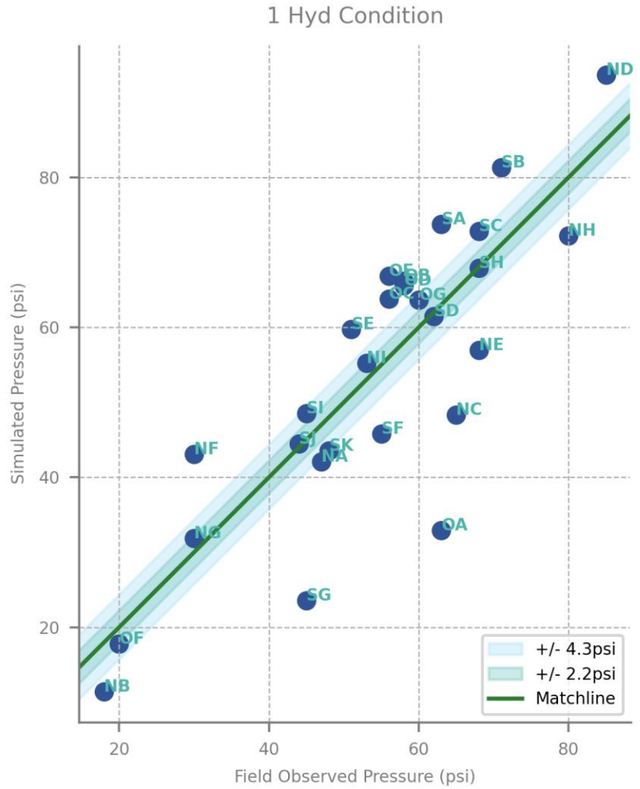

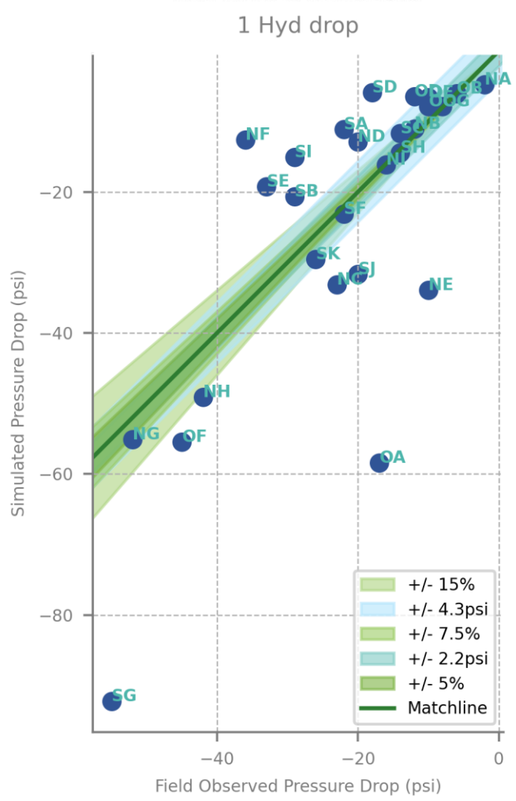

Appendix W-G

City of Monroe Drinking Water Quality Report

THIS PAGE INTENTIONALLY BLANK

Taste ☐ Value ☐ Quality



DRINKING WATER QUALITY REPORT

City of Monroe

2018





WATER QUALITY ANALYSIS

Where does our water come from? How is our water treated? What is it tested for? Do we have an adequate supply?

FINISH READING ON PG. 2 & 3

FACTS & FIGURES

What the Enviromental Protection Agency wants you to know, and how you can use it to ensure the best possible drinking water.

FINISH READING ON PG. 4

Water is a life-essential resource yet, at less than a penny a gallon, it costs very little compared to its value.

The City of Monroe prides itself on distributing world class water services. From system maintenance and storage, to distributing water to your tap, we continually strive to be stewards of this precious resource. This ensures high-quality water and service for years to come.

As this year's Drinking Water Quality Report shows, safe, clean, great-tasting water takes a team effort from source to tap.

City of Monroe
Public Works Department
806 West Main St
Monroe, WA 98272



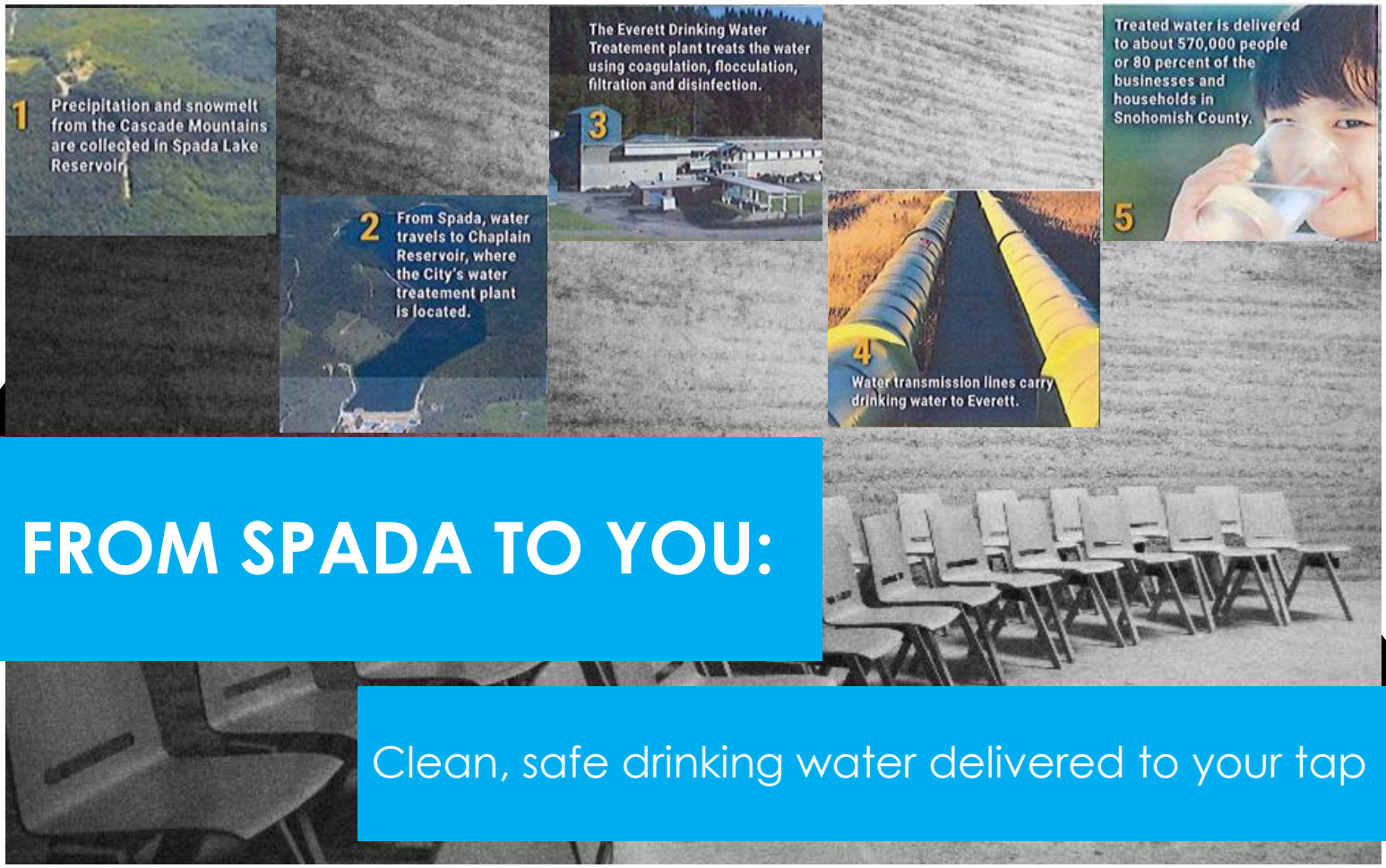

FROM SPADA TO YOU:

Clean, safe drinking water delivered to your tap

Your drinking water comes from Spada Lake Reservoir, located about 25 miles north-east of Monroe at the headwaters of the Sultan River. This 50-billion-gallon storage facility serves as a collection point for rain and snowmelt from the Cascade Mountains. It was created in 1964 through a partnership between the City of Everett and the Snohomish County PUD as part of the Jackson Hydroelectric Project.

Spada Lake Reservoir is located in the Upper Sultan River Watershed, an area encompassing more than 80 square miles. This is one of the wettest watersheds in the continental United States. The average annual rainfall is about 165 inches-five times the rainfall of Monroe.

Water quality in the Sultan basin is carefully monitored. To protect the naturally pristine water in Spada Lake Reservoir, the watershed is patrolled and human activities are limited to minimize the impact on water quality. We continue to evaluate and adjust our security measures on an ongoing basis.

ENSURING AN ADAQUATE SUPPLY

The City of Monroe partners with the City of Everett who provides water to the majority of water systems in Snohomish County and administers a regional water conservation program. The program is planned and developed with the water systems we serve and funded from water system revenues. More that $7.7 million has been invested in regional water conservation since 2001. This includes such activites as school education, conservation kits, rebates for efficient appliances, leak detection, business audits, and school irrigation audits



Quick Facts:

- Water savings of 3.9 million gallons per day. (92,000 Bathtubs)
- In 2018
  - 780 water conservation workshops were conducted in classrooms throughout Snohomish County.
  - 18,500 Students reached
  - 2,400 Indoor conservation kits
  - 2,900 Outdoor conservation kits

2018 Water Quality Analysis Results

City of Monroe 2018

Detected Regulated Contaminants

Parameter	Major Source	Units	EPA Regulations: Ideal Level/ Goal (MCLG)	EPA Regulations: Maximum Allowable (MCL)	Monroe Water Results: Range or Other	Monroe Water Results: Average Value or Highest Result	Comply?
Total Coliform Bacteria	Naturally present in the environment	% Positive	0	5% Positive per Month	None	<5%	Yes
Total coliform bacteria monitoring tracks microbial quality in the water distribution system. Monroe collects around 30 samples per month or 360 per year. No more than 5 percent of the monthly tests can be positive for total coliform. In 2018 there were 14 coliforms detected in one sampling. Over 50 retake samples were conducted for this event with no coliforms being detected. This event was considered to be an error in testing. Best sampling practices were evaluated and a level one survey was conducted.							
Fluoride	Dental health additive	ppm	2	4	0.03-0.9	0.7	Yes
Fluoride is added to your water in carefully controlled levels for dental health. The minimum value of 0.03 ppm was due to a maintenance-related feed outage that lasted no more than one day induration							
Residual Disinfectant Level (free chlorine)	Added as a drinking water disinfectant	ppm	4.0 (MRDLG)	4.0 (MRDL)	0.2-1.1	0.6	Yes
Haloacetic Acids (5) (HAA5)	By-product of drinking water chlorination	ppb	N/A	60	16-46	32.7	Yes
Total Trihalomethanes (TTHM)	By-product of drinking water chlorination	ppb	N/A	80	18-55	35.2	Yes
Haloacetic acids and trihalomethanes form as by-products of the chlorination process that is used to kill or inactivate disease-causing microbes. The TTHM and HAA5 results are from four locations in Monroe, which are monitored to determine compliance with current regulations. Results are an average taken from all four locations.							
Turbidity	Soil erosion	NTU	N/A	TT	100%	0.06	Yes
Turbidity is a measure of the amount of particulates in water expressed in Neuphelometric Turbidity Units (NTU). Particulates in water can include bacteria, viruses, and protozoans that can cause disease. Turbidity measurements are used to determine the effectiveness of the treatment processes in removing these particulates. The EPA turbidity limit is 0.3 NTU. The values reported are the lowest monthly percentage of samples that met the EPA limit and the highest four-hour combined water turbidity measurement obtained during the year. In 2018, no filtered water turbidity results were above the EPA limit so the lowest percentage was 100 percent. The plant targets production of filtered water turbidities of 0.1 NTU or less.							

Detected Contaminants from Unregulated Contaminant Monitoring Rule 4 (UCMR4) Sampling

Parameter	Major Source	Units	Monroe Water Results: Range Detected	Monroe Water Results: Average Value or Highest Result
Total Organic Carbon*	Naturally present in the environment	ppm	<0.81-2.6	1.35
Manganese	Naturally present in the environment	ppb	3.2	3.2
Bromochloroacetic Acid	By-product of drinking water chlorination	ppb	ND-0.6	0.45
Bromodichloroacetic Acid	By-product of drinking water chlorination	ppb	0.5-0.8	0.6
Brominated Haloacetic Acid (HAA6Br)	By-product of drinking water chlorination	ppb	0.5-1.8	1.025
Haloacetic Acid (9) (HAA9)	By-product of drinking water chlorination	ppb	28.6-48	41.025

*Samples taken at treatment plant after influent. All other samples taken in the distribution system of Monroe.

Detected Unregulated Contaminants

Parameter	Units	Ideal Level/ Goal (MCLG)	Monroe Water Results: Range Detected	Monroe Water Results: Average Value
Bromodichloromethane	ppb	0	1-1.9	1.5
Chloroform (trichloromethane)	ppb	70	17-53	33.7
Dichloroacetic Acid	ppb	0	2-19	12.2
Trichloroacetic Acid	ppb	20	13-35	20.1
These substances are disinfection by-products for which no MCL standard has been set, but which must be monitored to determine compliance with the USEPA Stage 2 Disinfection By-products Rule MCLs for Total Trihalomethanes and Haloacetic Acids (5).				

IMPORTANT TERMS

Maximum Contaminant Level Goal (MCLG) – The level of a contaminant in drinking water below which there is no known or expected risk to health. MCLGs allow for a margin of safety.

Maximum Contaminant Level (MCL) – The highest level of a contaminant that is allowed in drinking water. MCLs are set as close to the MCLGs as feasible using the best available water treatment technology.

Maximum Residual Disinfectant Level (MRDL) – The highest level of a disinfectant allowed in drinking water. There is convincing evidence that addition of a disinfectant is necessary for control of microbial contaminants.

Maximum Residual Disinfectant Level Goal (MRDLG) – The level of a drinking water disinfectant below which there is no known or expected risk to health. MRDLGs do not reflect the benefits of the use of disinfectants to control microbial contaminants.

Treatment Technique (TT) – A required process intended to reduce the level of a contaminant in drinking water.

Action Level (AL) – The concentration of a contaminant, which, if exceeded, triggers treatment or other requirements which a water system must follow.

Parts per Million (ppm)/ Parts per Billion (ppb) – A part per million means that one part of a particular contaminant is present for every million parts of water. Similarly, parts per billion indicate the amount of a contaminant per billion parts of water.

Not Applicable (N/A) – Means EPA has not established MCLGs for these substances.

REQUIRED POLYMER STATEMENT:

During water treatment, organic polymer coagulants are added to improve the coagulation and filtration processes that remove particulates from water. The particulates that are removed can include viruses, bacteria and other disease causing organisms. The USEPA sets limits on the type and amount of polymer that a water system can add to the water. In addition to the EPA limits, the State of Washington requires that all polymers used be certified safe for potable water use by an independent testing organization (NSF International). During treatment, Everett adds only NSP approved polymers and the levels used are far below the safe limits set by the USEPA.

Lead, Copper and pH

Parameter	Major Source	Units	EPA Regulations: Ideal Level/Goal (MCLG)	EPA Regulations: Action Level (AL)	Monroe & Everett Water Results: 90th % Level	Monroe & Everett Water Results: Homes Exceeding the AL	Comply?
Lead	Plumbing, erosion of natural deposits	ppb	0	15	2	0 of 108 (0.0%)	Yes
Copper	Plumbing, erosion of natural deposits	ppm	1.3	1.3	0.141	0 of 108 (0.0%)	Yes
USEPA and state regulations require water systems to monitor for the presence of lead and copper at household taps every three years. The above data was collected in 2018. The next required round of sampling will be in 2021. The 90th% level is the highest result obtained in 90 percent of the samples collected when the results are ranked in order from lowest to highest. Results for water tested before it enters household plumbing are lower than tap results, which indicate that household plumbing may contribute to lead and copper at the tap.							
pH	Soda ash is added to reduce water corrosivity by increasing pH and alkalinity	s.u.	Daily Avg 7.6	Min Daily Avg 7.4	Average 7.6	Minimum 7.3	Yes
The Washington State Department of Health requires Everett, Monroe's water provider, to operate corrosion control treatment at or above a minimum daily average pH of 7.4. Everett measures pH six times per day (once every four hours). The average daily pH cannot be below 7.4 for more than nine days every six months. In 2018, the average daily pH dropped below 7.4 for two days.							

USEPA required lead statement: If present, elevated levels of lead can cause serious health problems, especially for pregnant women and young children. Lead in drinking water is primarily from materials and components associated with service lines and home plumbing. The City of Everett Utilities Division is responsible for providing high quality drinking water, but cannot control the variety of materials used in plumbing components. When your water has been sitting for several hours, you can minimize the potential for lead exposure by flushing your tap for 30 seconds to two minutes before using water for drinking or cooking. If you are concerned about lead in your water, you may wish to have your water tested. Information on lead in drinking water, testing methods and steps you can take to minimize exposure is available from the Safe Drinking Water Hotline or at epa.gov/safewater/lead.

YOUR DRINKING WATER FACTS AND FIGURES

All water sources (both tap water and bottled water) contain impurities. As water flows over the surface of the land or through the ground, it dissolves naturally occuring minerals and, in some cases, radioactive material and can pick up substances resulting from the presence of animals or from human activity. Contaminents that may be present in source water include:

- Microbial contaminents such as viruses and bacteria, which may come from sewage treatment plants, septic systems, agricultural livestock operations, and wildlife.
- Inorganic contaminents, such as salts and metals, which can be naturally occuring or result from urban surface water, industrial or domestic wastewater discharges, oil and gas production, mining, or farming.
- Pesticides and herbicides, which may come from a variety of sources such as agriculture, urban surface water and residential uses.
- Organic chemical contaminants, including synthetic and volatile organic chemicals, which are by-products of industrial processes and petroleum, and may also come from gas stations, urban stromwater runoff and septic systems.
- Radioactive contaminents, which can be naturally occuring or be the result of oil and gas production and mining activities.

In order to ensure that tap water is safe to drink, the US Enviromental Protection Agency (EPA) perscribes regualtions which limit the amount of certain contaminents in water provided by public water systems. Food and Drug Administration (FDA) regulations establish limits for contaminents in bottled water which must provide the same protection for public health.

Drinking water, including bottled water, may reasonably be expected to contain at least small amounts of some contaminants. The presence of contaminents does not necessarily indicate that water poses a health risk. More information about contaminants and potential health effects can be obtained by calling the Enviromental Protection Agency Safe Drinking Water Hotline at 1-800-426-4791.

Some people may be more vulnerable to contaminents in drinking water than the general population. Immuno-compromied people, such as people with cancer undergoing chemotherapy, people who have undergone organ transplants, people with HIV/AIDS or other immune system disorders, some elderly, and infants can be particullary at risk from infections. These people should seek advice about drinking water from their health care providers. Enviromental Protection Agency and US Center for Disease Control (CDC) guidelines on appropriate means to lessen risk of infection by Cryptosporidium and other microbial contaminants are available from the Safe Drinking Water Hotline at 1-800-426-4791.

City of Monroe Water Quality Office:

360.863.4520 or 360.863.4616

www.monroewa.gov/301/Drinking-Water

State Department of Health:

1.800.521.0323

www.doh.wa.gov/ehp/dw/

US Envriomental Protection Agency:

1.800.426.4791

www.epa.gov/safewater

To get involved:
In decisions affecting your drinking water attend and comment at Monroe City Council meeting every Tuesday in the Council Chambers at 806 West Main St. Meeting begin at 7:00pm and run the first through the fourth Tuesdays of the month. Agendas are available on the City's Website at www.monroewa.gov

City of Monroe Elected Officials:
Mayor: Geoffrey Thomas
City Council: Kevin Hanford, Patsy Cudaback, Jeff Rasmussen, Jim Kamp, Ed Davis, Jason Gamble, Kirk Scarboro



THE ADVENTURE STARTS HERE!

1 DRINKING WATER QUALITY REPORT

City of Monroe

2019





2 WATER QUALITY ANALYSIS

Where does our water come from? How is our water treated? What is it tested for? Do we have an adequate supply?

FINISH READING ON PG. 2 & 3

3 FACTS & FIGURES

What the Enviromental Protection Agency wants you to know, and how you can use it to ensure the best possible drinking water.

FINISH READING ON PG. 4

Water is a life-essential resource yet, at less than a penny a gallon, it costs very little compared to its value.

The City of Monroe prides itself on distributing world class water services. From system maintenance and storage, to distributing water to your tap, we continually strive to be stewards of this precious resource. This ensures high-quality water and service for years to come.

As this year's Drinking Water Quality Report shows, safe, clean, great-tasting water takes a team effort from source to tap.

City of Monroe
Public Works Department
806 West Main St
Monroe, WA 98272

MONROE
WASHINGTON



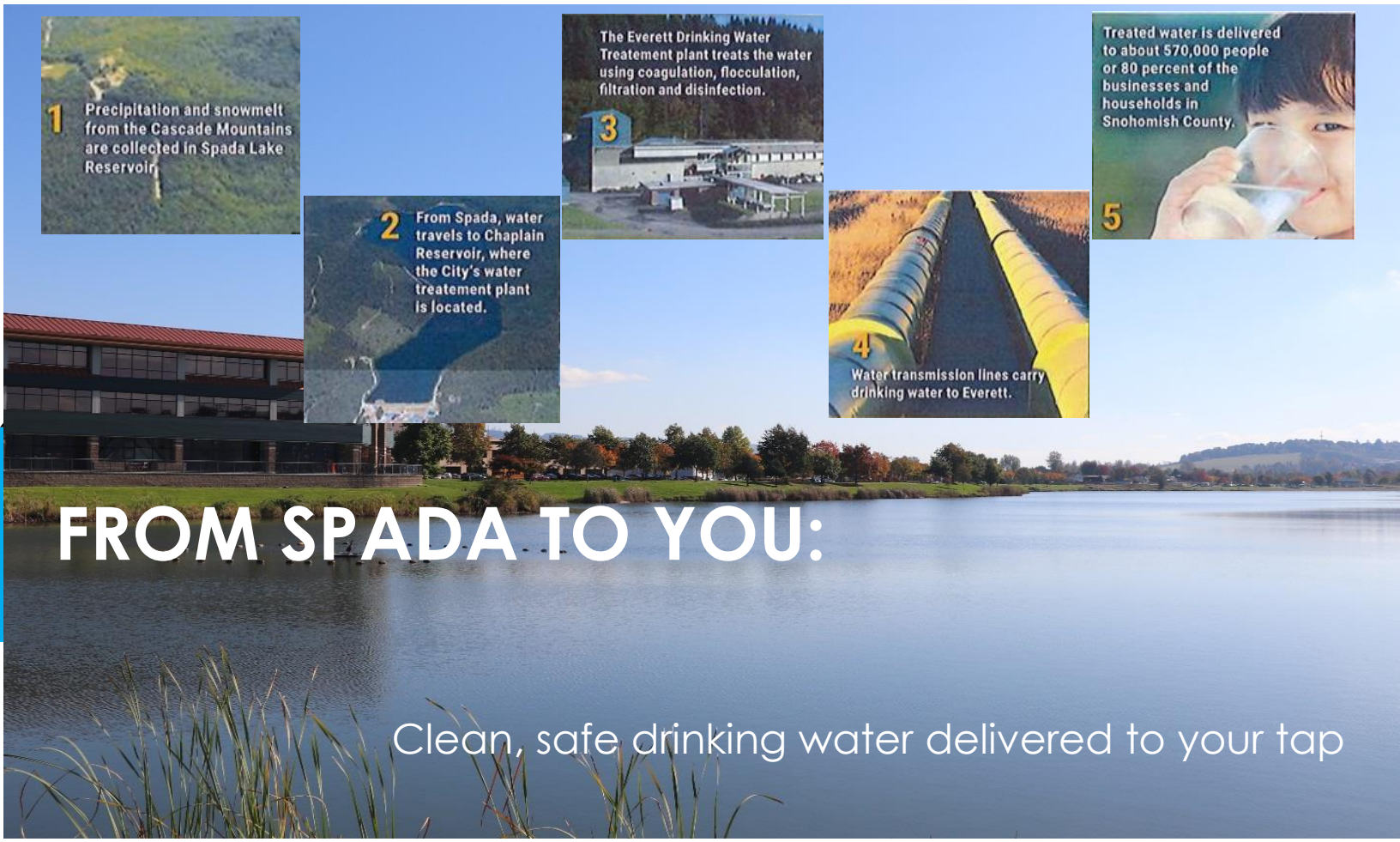

FROM SPADA TO YOU:

Clean, safe drinking water delivered to your tap

Your drinking water comes from Spada Lake Reservoir, located about 25 miles north-east of Monroe at the headwaters of the Sultan River. This 50-billion-gallon storage facility serves as a collection point for rain and snowmelt from the Cascade Mountains. It was created in 1964 through a partnership between the City of Everett and the Snohomish County PUD as part of the Jackson Hydroelectric Project.

Spada Lake Reservoir is located in the Upper Sultan River Watershed, an area encompassing more than 80 square miles. This is one of the wettest watersheds in the continental United States. The average annual rainfall is about 165 inches-five times the rainfall of Monroe.

Water quality in the Sultan basin is carefully monitored. To protect the naturally pristine water in Spada Lake Reservoir, the watershed is patrolled and human activities are limited to minimize the impact on water quality. We continue to evaluate and adjust our security measures on an ongoing basis.



ENSURING AN ADAQUATE SUPPLY

The City of Monroe partners with the City of Everett who provides water to the majority of water systems in Snohomish County and administers a regional water conservation program. The program is planned and developed with the water systems served, and funded from water system revenues. More that $7.7 million has been invested in regional water conservation since 2001. This includes such activites as school education, conservation kits, rebates for efficient appliances, leak detection, business audits, and school irrigation audits

Quick Facts:

- Water savings of over 3.5 million gallons per day.
- In 2019
  - Water conservation workshops were conducted in classrooms throughout Snohomish County.
  - Over 18,000 Students reached
  - 2,400+ Indoor conservation kits
  - 2,900+ Outdoor conservation kits

2019 Water Quality Analysis Results

Detected Regulated Contaminants

Parameter	Major Source	Units	EPA Regulations: Ideal Level/ Goal (MCLG)	EPA Regulations: Maximum Allowable (MCL)	Monroe Water Results: Range or Other	Monroe Water Results: Average Value or Highest Result	Comply?
Total Coliform Bacteria	Naturally present in the environment	% Positive	0	5% Positive per Month	None	<5%	Yes
Total coliform bacteria monitoring tracks microbial quality in the water distribution system. Monroe collects around 30 samples per month or 360 per year. No more than 5 percent of the monthly tests can be positive for total coliform. In 2018 there were 14 coliforms detected in one sampling. Over 50 retake samples were conducted for this event with no coliforms being detected. This event was considered to be an error in testing. Best sampling practices were evaluated and a level one survey was conducted.							
Fluoride	Dental health additive	ppm	2	4	0.3 - 0.7	0.7	Yes
Fluoride is added to your water in carefully controlled levels for dental health. The minimum value of 0.03 ppm was due to a maintenance-related feed outage that lasted no more than one day induration							
Residual Disinfectant Level (free chlorine)	Added as a drinking water disinfectant	ppm	4.0 (MRDLG)	4.0 (MRDL)	0.2–1.1	0.6	Yes
Haloacetic Acids (5) (HAA5)	By-product of drinking water chlorination	ppb	N/A	60	22-38	33.2	Yes
Total Trihalomethanes (TTHM)	By-product of drinking water chlorination	ppb	N/A	80	20-61	39.6	Yes
Haloacetic acids and trihalomethanes form as by-products of the chlorination process that is used to kill or inactivate disease-causing microbes. The TTHM and HAA5 results are from four locations in Monroe, which are monitored to determine compliance with current regulations. Results are an average taken from all four locations.							
Turbidity	Soil erosion	NTU	N/A	TT	100%	0.07	Yes
Turbidity is a measure of the amount of particulates in water expressed in Neuphelometric Turbidity Units (NTU). Particulates in water can include bacteria, viruses, and protozoans that can cause disease. Turbidity measurements are used to determine the effectiveness of the treatment processes in removing these particulates. The EPA turbidity limit is 0.3 NTU. The values reported are the lowest monthly percentage of samples that met the EPA limit and the highest four-hour combined water turbidity measurement obtained during the year. In 2018, no filtered water turbidity results were above the EPA limit so the lowest percentage was 100 percent. The plant targets production of filtered water turbidities of 0.1 NTU or less.							

Detected Contaminants from Unregulated Contaminant Monitoring Rule 4 (UCMR4) Sampling

Parameter	Major Source	Units	Monroe Water Results: Range Detected	Monroe Water Results: Average Value or Highest Result
Total Organic Carbon*	Naturally present in the environment	ppm	<0.81-2.6	1.35
Manganese	Naturally present in the environment	ppb	3.2	3.2
Bromochloroacetic Acid	By-product of drinking water chlorination	ppb	ND-0.6	0.45
Bromodichloroacetic Acid	By-product of drinking water chlorination	ppb	0.5-0.8	0.6
Brominated Haloacetic Acid (HAA6Br)	By-product of drinking water chlorination	ppb	0.5-1.8	1.025
Haloacetic Acid (9) (HAA9)	By-product of drinking water chlorination	ppb	28.6-48	41.025

*Samples taken at treatment plant after influent. All other samples taken in the distribution system of Monroe.

Detected Unregulated Contaminants

Parameter	Units	Ideal Level/ Goal (MCLG)	Monroe Water Results: Range Detected	Monroe Water Results: Average Value
Bromodichloromethane	ppb	0	1 - 2.5	1.8
Chloroform (trichloromethane)	ppb	70	19.1 - 59	37.8
Dichloroacetic Acid	ppb	0	4.4 - 14.4	10.9
Trichloroacetic Acid	ppb	20	17 - 25.2	20.9

These substances are disinfection by-products for which no MCL standard has been set, but which must be monitored to determine compliance with the USEPA Stage 2 Disinfection By-products Rule MCLs for Total Trihalomethanes and Haloacetic Acids (5).

IMPORTANT TERMS

Maximum Contaminant Level Goal (MCLG) – The level of a contaminant in drinking water below which there is no known or expected risk to health. MCLGs allow for a margin of safety.

Maximum Contaminant Level (MCL) – The highest level of a contaminant that is allowed in drinking water. MCLs are set as close to the MCLGs as feasible using the best available water treatment technology.

Maximum Residual Disinfectant Level (MRDL) – The highest level of a disinfectant allowed in drinking water. There is convincing evidence that addition of a disinfectant is necessary for control of microbial contaminants.

Maximum Residual Disinfectant Level Goal (MRDLG) – The level of a drinking water disinfectant below which there is no known or expected risk to health. MRDLGs do not reflect the benefits of the use of disinfectants to control microbial contaminants.

Treatment Technique (TT) – A required process intended to reduce the level of a contaminant in drinking water.

Action Level (AL) – The concentration of a contaminant, which, if exceeded, triggers treatment or other requirements which a water system must follow.

Parts per Million (ppm)/ Parts per Billion (ppb) – A part per million means that one part of a particular contaminant is present for every million parts of water. Similarly, parts per billion indicate the amount of a contaminant per billion parts of water.

Not Applicable (N/A) – Means EPA has not established MCLGs for these substances.

REQUIRED POLYMER STATEMENT:

During water treatment, organic polymer coagulants are added to improve the coagulation and filtration processes that remove particulates from water. The particulates that are removed can include viruses, bacteria and other disease causing organisms. The USEPA sets limits on the type and amount of polymer that a water system can add to the water. In addition to the EPA limits, the State of Washington requires that all polymers used be certified safe for potable water use by an independent testing organization (NSF International). During treatment, Everett adds only NSP approved polymers and the levels used are far below the safe limits set by the USEPA.

Lead, Copper and pH

Parameter	Major Source	Units	EPA Regulations: Ideal Level/Goal (MCLG)	EPA Regulations: Action Level (AL)	Monroe & Everett Water Results: 90th % Level	Monroe & Everett Water Results: Homes Exceeding the AL	Comply?
Lead	Plumbing, erosion of natural deposits	ppb	0	15	2	0 of 108 (0.0%)	Yes
Copper	Plumbing, erosion of natural deposits	ppm	1.3	1.3	0.141	0 of 108 (0.0%)	Yes
USEPA and state regulations require water systems to monitor for the presence of lead and copper at household taps every three years. The above data was collected in 2018. The next required round of sampling will be in 2021. The 90th% level is the highest result obtained in 90 percent of the samples collected when the results are ranked in order from lowest to highest. Results for water tested before it enters household plumbing are lower than tap results, which indicate that household plumbing may contribute to lead and copper at the tap.							
pH	Soda ash is added to reduce water corrosivity by increasing pH and alkalinity	s.u.	Daily Avg 7.6	Min Daily Avg 7.4	Average 7.6	Minimum 7.3	Yes

The Washington State Department of Health requires Everett, Monroe's water provider, to operate corrosion control treatment at or above a minimum daily average pH of 7.4. Everett measures pH six times per day (once every four hours). The average daily pH cannot be below 7.4 for more than nine days every six months. In 2018, the average daily pH dropped below 7.4 for two days.

USEPA required lead statement: If present, elevated levels of lead can cause serious health problems, especially for pregnant women and young children. Lead in drinking water is primarily from materials and components associated with service lines and home plumbing. The City of Everett Utilities Division is responsible for providing high quality drinking water, but cannot control the variety of materials used in plumbing components. When your water has been sitting for several hours, you can minimize the potential for lead exposure by flushing your tap for 30 seconds to two minutes before using water for drinking or cooking. If you are concerned about lead in your water, you may wish to have your water tested. Information on lead in drinking water, testing methods and steps you can take to minimize exposure is available from the Safe Drinking Water Hotline or at epa.gov/safewater/lead.

YOUR DRINKING WATER FACTS AND FIGURES

All water sources (both tap water and bottled water) contain impurities. As water flows over the surface of the land or through the ground, it dissolves naturally occuring minerals and, in some cases, radioactive material and can pick up substances resulting from the presence of animals or from human activity. Contaminents that may be present in source water include:

- Microbial contaminents such as viruses and bacteria, which may come from sewage treatment plants, septic systems, agricultural livestock operations, and wildlife.
- Inorganic contaminents, such as salts and metals, which can be naturally occuring or result from urban surface water, industrial or domestic wastewater discharges, oil and gas production, mining, or farming.
- Pesticides and herbicides, which may come from a variety of sources such as agriculture, urban surface water and residential uses.
- Organic chemical contaminants, including synthetic and volatile organic chemicals, which are by-products of industrial processes and petroleum, and may also come from gas stations, urban stromwater runoff and septic systems.
- Radioactive contaminents, which can be naturally occuring or be the result of oil and gas production and mining activities.

In order to ensure that tap water is safe to drink, the US Enviromental Protection Agency (EPA) perscribes regualtions which limit the amount of certain contaminents in water provided by public water systems. Food and Drug Administration (FDA) regulations establish limits for contaminents in bottled water which must provide the same protection for public health.

Drinking water, including bottled water, may reasonably be expected to contain at least small amounts of some contaminants. The presence of contaminents does not necessarily indicate that water poses a health risk. More information about contaminants and potential health effects can be obtained by calling the Enviromental Protection Agency Safe Drinking Water Hotline at 1-800-426-4791.

Some people may be more vulnerable to contaminents in drinking water than the general population. Immuno-compromied people, such as people with cancer undergoing chemotherapy, people who have undergone organ transplants, people with HIV/AIDS or other immune system disorders, some elderly, and infants can be particullary at risk from infections. These people should seek advice about drinking water from their health care providers. Enviromental Protection Agency and US Center for Disease Control (CDC) guidelines on appropriate means to lessen risk of infection by Cryptosporidium and other microbial contaminants are available from the Safe Drinking Water Hotline at 1-800-426-4791.

City of Monroe Water Quality Office:

360.863.4515 or 360.863.4616

www.monroewa.gov/301/Drinking-Water

State Department of Health:

1.800.521.0323

www.doh.wa.gov/ehp/dw/

US Envriomental Protection Agency:

1.800.426.4791

www.epa.gov/safewater

To get involved:
In decisions affecting your drinking water attend and comment at Monroe City Council meeting every Tuesday in the Council Chambers at 806 West Main St. Meeting begin at 7:00pm and run the first through the fourth Tuesdays of the month. Agendas are available on the City's Website at www.monroewa.gov

City of Monroe Elected Officials:
Mayor: Geoffrey Thomas
City Council: Kevin Hanford, Patsy Cudaback, Jeff Rasmussen, Heather Rousey, Ed Davis, Jason Gamble, Kirk Scarboro

Consumer Confidence Report

2020

Taste ▪ Value ▪ Quality

Water is a life-essential resource - yet, at less than a penny a gallon, it costs very little compared to its value.

Water rates pay for everything it takes to operate the City of Monroe's water system, from storage and treatment, to delivering the water to your tap. The water rates also help pay for Monroe Water System improvements that ensure high-quality drinking water for generations to come.

As this year's Consumer Confidence Report shows, this is an exceptional value for the clean, safe and great tasting drinking water delivered to you.



MONROE
WASHINGTON

City of Monroe Public Works Department
806 W. Main St Monroe, WA 98272

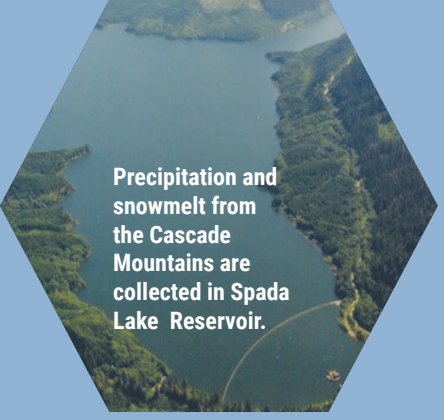

Precipitation and snowmelt from the Cascade Mountains are collected in Spada Lake Reservoir.



From Spada, water travels to Chaplain Reservoir, where the City's water treatment plant is located.

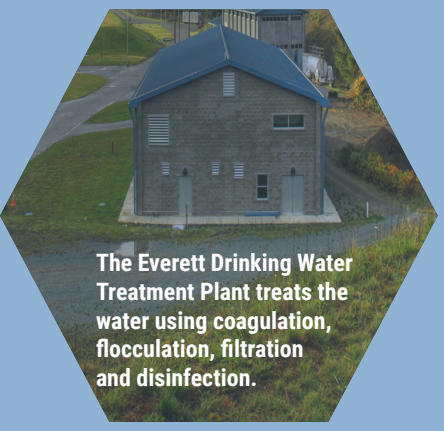

The Everett Drinking Water Treatment Plant treats the water using coagulation, flocculation, filtration and disinfection.



Water transmission lines carry drinking water to Everett.



Treated water is delivered to about 640,000 people, or 75 percent of the businesses and households in Snohomish County.

FROM SPADA TO YOU:

Clean, safe drinking water delivered to your tap

The City of Monroe's drinking water comes from Spada Lake Reservoir, located about 30 miles east of Everett at the headwaters of the Sultan River. This 50-billion-gallon storage facility serves as a collection point for rain and snowmelt from the Cascade Mountains. It was created in 1964 through a partnership between the City of Everett and the Snohomish County PUD as part of the Jackson Hydroelectric Project.

Spada Lake Reservoir is located in the Upper Sultan River Watershed, an area encompassing more than 80 square miles. This is one of the wettest watersheds in the continental United States. The average annual rainfall is about 165 inches—five times the rainfall in Everett.

Water quality in the Sultan Basin is carefully monitored. To protect the naturally pristine water in Spada Lake Reservoir, the watershed is patrolled, and human activities are limited to minimize the impact on water quality. We continue to evaluate and adjust our security measures on an ongoing basis.

Ensuring an adequate supply

Conservation helps meet the needs of people, industries, businesses and farms, while also keeping fish and other aquatic life alive and well.

Everett provides water to the majority of water systems in Snohomish County and administers a regional water conservation program. The program is planned and developed with the water systems we serve and funded from water system revenues.

More than $7.9 million has been invested in regional water conservation activities since 2001. This includes such activities as school education, indoor and outdoor water conservation kits, rebates for water efficient clothes washers and toilets, leak detection, business water audits and school irrigation audits. Through these efforts, we have saved more than 5.6 million gallons per day (MGD) —enough water to fill nearly 133,000 bathtubs a day.

Conservation planning has occurred in six-year cycles as part of Everett's comprehensive water system plan. The first plan covered the period from 2001 through 2006, the second from 2007 through 2012 and the third from 2013 through 2019. The 2020 Comprehensive Water Plan will be a ten-year plan and should be issued in April 2021. The draft plan states that the regional conservation program goal for 2020-2029 will reduce the regional demand for water by approximately 1.8 MGD on an annual basis and will include school education and conservation kits, along with continued support of large water users.

In 2020, 242 water conservation workshops were conducted in classrooms throughout Snohomish County, reaching more than 5,396 students. Water systems purchased more than 2,900 indoor conservation kits and 4,800 outdoor conservation kits. These activities saved an estimated 0.68 million gallons per day (MGD) regionally.

For conservation tips and information, visit monroewa.gov/483/conservation

2020 water quality analysis results

CITY OF MONROE

Parameter	Major Source	Units	EPA Regulations: Ideal Level/ Goal (MCLG)	EPA Regulations: Maximum Allowable (MCL)	Monroe Water Results: Range or Other	Monroe Water Results: Average Value or Highest Result	Comply?
Total Coliform Bacteria	Naturally present in the environment	% Positive	0	5% Positive per Month	None	0%	Yes
Total coliform bacteria monitoring tracks microbial quality in the water distribution system. Monroe collects around 30 samples per month or 360 per year. No more than 5 percent of the monthly totals can be positive for total coliforms. No total coliforms were detected in 2020.							
Fluoride	Dental health additive	ppm	2	4	0.2-0.8	0.7	Yes
Fluoride is added to your water in carefully controlled levels for dental health. Due to system maintenance, there were three days during the year in which the daily average feed value was below the state minimum for dental health of 0.5ppm.							
Residual Disinfectant Level (free chlorine)	Added as a drinking water disinfectant	ppm	4.0 (MRDLG)	4.0 (MRDL)	0.2-1.1	0.7	Yes
Haloacetic Acids (5) (HAA5)	By-product of drinking water chlorination	ppb	N/A	60	26–45[1]	36[2]	Yes
Total Trihalomethanes (TTHM)	By-product of drinking water chlorination	ppb	N/A	80	28-65[1]	43[2]	Yes
Haloacetic acids and trihalomethanes form as by-products of the chlorination process that is used to kill or inactivate disease-causing microbes. The TTHM and HAA5 results are from four locations in Monroe, which are monitored to determine compliance with current regulations. [1]Range of results taken from all four locations. [2]Highest locational running annual average of the four sites monitored.							
Required Reporting Violation Statement: In the third quarter of 2020 the Monroe Water System completed required sampling for disinfection byproducts. Due to the Washington State Department of Health not receiving the reports by the due date, Monroe was not in reporting compliance for that period. At no time was the quality of Monroe's drinking water compromised. Corrective actions have been put in place to eliminate this from occurring in the future.							
Turbidity	Soil erosion	NTU	N/A	TT	100%	0.08	Yes
The EPA turbidity limit is 0.3 NTU. In 2020, no filtered water turbidity results exceeded 0.3 NTU so the lowest percentage that met the EPA limit was 100%. During the month of July 2020, an equipment malfunction caused erroneous turbidity measurements to be made for six days on water before treatment. Although the problem was limited to measurements on the water before treatment, this constitutes a monitoring violation that requires public notification (see below).							
Required Monitoring Violation Statement: Water System's are required to monitor drinking water for specific parameters on a regular basis. Results of regular monitoring are an indicator of whether or not drinking water meets health standards. During the month of July 2020, The Everett Water System did not complete all monitoring or testing for turbidity, and therefore cannot be sure of the quality of the drinking water during that time. There is nothing you need to do. At no time was the quality of Everett's drinking water compromised. The plant has resolved the problem and taken steps to prevent a repeat occurrence.							

Lead, Copper and pH

Parameter	Major Source	Units	EPA Regulations: Ideal Level/ Goal (MCLG)	EPA Regulations: Action Level (AL)	Monroe Water Results: 90th % Level	Monroe Water Results: Homes Exceeding the AL	Comply?
Lead	Plumbing, erosion of natural deposits	ppb	0	15	2.2	0 of 4 (0.0%)	Yes
Copper	Plumbing, erosion of natural deposits	ppm	1.3	1.3	0.111	0 of 4 (0.0%)	Yes
USEPA and state regulations require water systems to monitor for the presence of lead and copper at household taps every three years. Lead and copper monitoring is conducted by Everett and many of the water systems that it supplies in the combined service area as a regional group. The above data was collected in 2018. The next required round of sampling will be in 2021. The 90th percent level is the highest result obtained in 90 percent of the samples collected when the results are ranked in order from lowest to highest. In the past, the results for water tested before it enters household plumbing were even lower than the tap results. This indicates that there is virtually no lead or copper in the water and that household plumbing may contribute to lead and copper at the tap.							
pH	Soda ash is added to reduce water corrosivity by increasing pH and alkalinity	s.u.	Daily Average 7.6	Min Daily Average 7.3	Average 7.6	Minimum 7.0	Yes
The Washington State Department of Health requires Everett to operate corrosion control treatment at or above a minimum daily average pH of 7.4. Everett measures pH six times per day (once every four hours). The average daily pH cannot be below 7.4 for more than nine days every six months. In 2020, the average daily pH dropped below 7.4 for one day.							

USEPA required lead statement: If present, elevated levels of lead can cause serious health problems, especially for pregnant women and young children. Lead in drinking water is primarily from materials and components associated with service lines and home plumbing. The City of Everett Utilities Division is responsible for providing high quality drinking water, but cannot control the variety of materials used in plumbing components. When your water has been sitting for several hours, you can minimize the potential for lead exposure by flushing your tap for 30 seconds to two minutes before using water for drinking or cooking. If you are concerned about lead in your water, you may wish to have your water tested. Information on lead in drinking water, testing methods and steps you can take to minimize exposure is available from the Safe Drinking Water Hotline at 1-800-426-4791 or online at epa.gov/safewater/lead.

Detected Unregulated Contaminants

Parameter	Units	Ideal Level/ Goal (MCLG)	Monroe Water Results: Range Detected	Monroe Water Results: Average Value
Bromodichloromethane	ppb	0	1.2-2.3	1.7
Chloroform (trichloromethane)	ppb	70	26-62	41
Dichloroacetic Acid	ppb	0	4-17	11
Trichloroacetic Acid	ppb	20	17-25	22
These substances are disinfection by-products for which no MCL standard has been set, but which must be monitored to determine compliance with the USEPA Stage 2 Disinfection By-products Rule MCLs for Total Trihalomethanes and Haloacetic Acids (5).				

IMPORTANT TERMS

Turbidity – Turbidity is a measure of particulates suspended in water in Nephelometric Turbidity Units (NTU) and is an important test in determining drinking water quality. Particulates in water can include bacteria, viruses and protozoans that can cause disease.

Maximum Contaminant Level Goal (MCLG) – The level of a contaminant in drinking water below which there is no known or expected risk to health. MCLGs allow for a margin of safety.

Maximum Contaminant Level (MCL) – The highest level of a contaminant that is allowed in drinking water. MCLs are set as close to the MCLGs as feasible using the best available water treatment technology.

Maximum Residual Disinfectant Level (MRDL) – The highest level of a disinfectant allowed in drinking water. There is convincing evidence that addition of a disinfectant is necessary for control of microbial contaminants.

Maximum Residual Disinfectant Level Goal (MRDLG) – The level of a drinking water disinfectant below which there is no known or expected risk to health. MRDLGs do not reflect the benefits of the use of disinfectants to control microbial contaminants.

Treatment Technique (TT) – A required process intended to reduce the level of a contaminant in drinking water.

Action Level (AL) – The concentration of a contaminant, which, if exceeded, triggers treatment or other requirements which a water system must follow.

Parts per Million (ppm)/ Parts per Billion (ppb) – A part per million means that one part of a particular contaminant is present for every million parts of water. Similarly, parts per billion indicate the amount of a contaminant per billion parts of water.

Not Applicable (N/A) – Means EPA has not established MCLGs for these substances.

REQUIRED POLYMER STATEMENT:

During water treatment, organic polymer coagulants are added to improve the coagulation and filtration processes that remove particulates from water. The particulates that are removed can include viruses, bacteria and other disease-causing organisms. The USEPA sets limits on the type and amount of polymer that a water system can add to the water. In addition to the EPA limits, the State of Washington requires that all polymers used be certified safe for potable water use by an independent testing organization (NSF International). During treatment, Everett adds only NSF approved polymers and the levels used are far below the safe limits set by the USEPA.

THE FOLLOWING STATEMENTS ARE REQUIRED BY THE US ENVIRONMENTAL PROTECTION AGENCY.

Your drinking water facts and figures

All water sources (both tap water and bottled water) contain impurities. As water flows over the surface of the land or through the ground, it dissolves naturally occurring minerals and, in some cases, radioactive material, and can pick up substances resulting from the presence of animals or from human activity. Contaminants that may be present in source water include:

- Microbial contaminants such as viruses and bacteria, which may come from sewage treatment plants, septic systems, agricultural livestock operations and wildlife.
- Inorganic contaminants, such as salts and metals, which can be naturally occurring or result from urban surface water, industrial or domestic wastewater discharges, oil and gas production, mining or farming.
- Pesticides and herbicides, which may come from a variety of sources such as agriculture, urban surface water and residential uses.
- Organic chemical contaminants, including synthetic and volatile organic chemicals, which are by-products of industrial processes and petroleum production, and may also come from gas stations, urban stormwater runoff and septic systems.
- Radioactive contaminants, which can be naturally occurring or be the result of oil and gas production and mining activities.

City of Monroe
Water Quality Offices
360-863-4616
sbarr@monroewa.gov

State Department of Health
1-800-521-0323
doh.wa.gov/ehp/dw

US Environmental Protection Agency
1-800-426-4791
epa.gov/safewater

To get involved in decisions affecting your drinking water, contact John Lande at jlande@monroewa.gov

City of Monroe elected officials
Mayor: Geoffrey Thomas
City Council: Pasty Cudaback, Kevin Hanford, Ed Davis, Jeff Rasmussen, Jason Gamble, Kirk Scarboro & Heather Rousey

In order to ensure that tap water is safe to drink, US Environmental Protection Agency (EPA) prescribes regulations which limit the amount of certain contaminants in water provided by public water systems. Food and Drug Administration (FDA) regulations establish limits for contaminants in bottled water which must provide the same protection for public health.

Drinking water, including bottled water, may reasonably be expected to contain at least small amounts of some contaminants. The presence of contaminants does not necessarily indicate that water poses a health risk. More information about contaminants and potential health effects can be obtained by calling the EPA Safe Drinking Water Hotline at 1-800-426-4791.

Some people may be more vulnerable to contaminants in drinking water than the general population. Immuno-compromised people, such as people with cancer undergoing chemotherapy, people who have undergone organ transplants, people with HIV/AIDS or other immune system disorders, some elderly, and infants can be particularly at risk from infections. These people should seek advice about drinking water from their health care providers. EPA and US Center for Disease Control (CDC) guidelines on appropriate means to lessen risk of infection by Cryptosporidium and other microbial contaminants are available from the Safe Drinking Water Hotline at 1-800-426-4791.

CONSUMER CONFIDENCE REPORT 2021



TASTE • VALUE • QUALITY

Water is a life-essential resource— yet, at less than a penny a gallon, it costs very little compared to its value.

Your water rates pay for everything it takes to operate our water system, from storage and treatment to delivering the water to your tap. Your water rates also help pay for water system improvements that ensure that we will provide high-quality drinking water for generations to come. As this year's Drinking Water Quality Report shows, this is an exceptional value for the clean, safe, great tasting drinking water you receive.

MONROE
WASHINGTON

City of Monroe Public Works Department
806 W. Main ST WA 98272

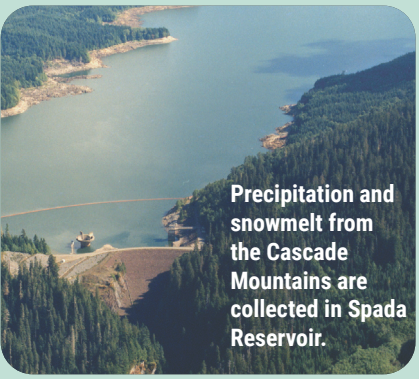

Precipitation and snowmelt from the Cascade Mountains are collected in Spada Reservoir.

FROM SPADA TO YOU

Clean, safe drinking water delivered to your tap

Your drinking water comes from Spada Reservoir, located about 30 miles east of Everett at the headwaters of the Sultan River. This 50-billion-gallon storage facility serves as a collection point for rain and snowmelt from the Cascade Mountains. It was created in 1964 through a partnership between the City of Everett and the Snohomish County PUD as part of the Jackson Hydroelectric Project.



From Spada, water travels to Chaplain Reservoir, where the City's water treatment plant is located.

Spada Reservoir is located in the Upper Sultan River Watershed, an area encompassing more than 80 square miles. This is one of the wettest watersheds in the continental United States. The average annual rainfall is about 165 inches—five times the rainfall in Everett.

Water quality in the Sultan Basin is carefully monitored. To protect the naturally pristine water in Spada Reservoir, the watershed is patrolled and human activities are limited to minimize the impact on water quality. We continue to evaluate and adjust our security measures on an ongoing basis.

Water is a precious resource.



The Everett Drinking Water Treatment Plant treats the water using coagulation, flocculation, filtration and disinfection.

ENSURING AN ADEQUATE SUPPLY

Conservation helps meet the needs of people, industries, businesses and farms, while also helping fish and other aquatic life

Everett provides water to the majority of water systems in Snohomish County and administers a regional water use efficiency program. The program is planned and developed with the water systems we serve and funded from water system revenues.

More than $8.3 million has been invested in regional water conservation activities since 2001. Our current water use efficiency program includes such activities as school education, indoor and outdoor water conservation kits, leak detection kits and support, and indoor/outdoor commercial water audits. Through these efforts, we have saved more than 6.93 million gallons per day (MGD)—enough water to fill nearly 163,000 bathtubs a day.

Conservation planning previously occurred in six-year cycles as part of Everett's comprehensive water system plan. The first plan covered the period from 2001 through 2006, the second from 2007 through 2012 and the third from 2013 through 2019. The current Comprehensive Water Plan is a ten-year plan, issued in mid-2021. The water use efficiency program goal for 2020-2029 will reduce the regional demand for water by approximately 2 MGD on an annual basis and will include school education and conservation kits, along with continued support of large water users.

In 2021, regional conservation programs and offerings continued even with many facilities closed to the public due to COVID-19. Through online water conservation lessons, 541 workshops were conducted with school classes throughout Snohomish County, reaching 13,032 students. Water systems purchased 1,405 indoor conservation kits and 1,165 outdoor conservation kits. These activities saved an estimated 0.63 MGD regionally.

For conservation tips and information, visit monroewa.gov/483/conservation



Water transmission lines carry drinking water to Everett.



Treated water is delivered to about 615,000 people, or 75 percent of the businesses and households in Snohomish County.

2021 water quality analysis results

CITY OF MONROE

Detected Regulated Contaminants

Parameter	Major Source	Units	EPA Regulations: Ideal Level/ Goal (MCLG)	EPA Regulations: Maximum Allowable (MCL)	Monroe Water Results: Range or Other	Monroe Water Results: Average Value or Highest Result	Comply?
Total Coliform Bacteria	Naturally present in the environment	% Positive	0	5% Positive per Month	None	0%	Yes
Total coliform bacteria monitoring tracks microbial quality in the water distribution system. Monroe collects around 30 samples per month or 360 per year. No more than 5 percent of the monthly totals can be positive for total coliform. No total coliform was detected in 2021.							
Fluoride	Dental health additive	ppm	2	4	0.5-0.8	0.7	Yes
Fluoride is added to your water in carefully controlled levels for dental health.							
Residual Disinfectant Level (free chlorine)	Added as a drinking water disinfectant	ppm	4.0 (MRDLG)	4.0 (MRDL)	0.3-1.1	0.75	Yes
Haloacetic Acids (5) (HAA5)	By-product of drinking water chlorination	ppb	N/A	60	23-40[1]	32[2]	Yes
Total Trihalomethanes (TTHM)	By-product of drinking water chlorination	ppb	N/A	80	25-64[1]	45[2]	Yes
Haloacetic acids and trihalomethanes form as by-products of the chlorination process that is used to kill or inactivate disease-causing microbes. The TTHM and HAA5 results are from four locations in Monroe, which are monitored to determine compliance with current regulations. [1]Range of results taken from all eight locations. [2]Highest locational running annual average of the eight sites monitored.							
Turbidity	Soil erosion	NTU	N/A	TT	100%	0.09	Yes
The values reported are the lowest monthly percentage of samples that met the EPA turbidity limit and the highest four hour combined filtered water turbidity measurement obtained during the year. The EPA turbidity limit is 0.3 NTU. In 2021, no filtered water turbidity results exceeded 0.3 NTU so the lowest percentage that met the EPA limit was 100%. The plant targets production of filter water turbidities of 0.10 NTU or less.							

Lead, Copper and pH

Parameter	Major Source	Units	EPA Regulations: Ideal Level/ Goal (MCLG)	EPA Regulations: Action Level (AL)	Everett/Monroe Water Results: 90th % Level	Everett/Monroe Water Results: Homes Exceeding the AL	Comply?
Lead	Plumbing, erosion of natural deposits	ppb	0	15	2.0 5.2	0 of 108 (0 of 4)	Yes
Copper	Plumbing, erosion of natural deposits	ppm	1.3	1.3	.0931 0.1	0 of 108 (0 of 4)	Yes
USEPA and state regulations require water systems to monitor for the presence of lead and copper at household taps every three years. Lead and copper monitoring is conducted by Everett and many of the water systems that it supplies in the combined service area as a regional group. The above data was collected in 2021. The next required round of sampling will be in 2024. The 90th percent level is the highest result obtained in 90 percent of the samples collected when the results are ranked in order from lowest to highest. In the past, the results for water tested before it enters household plumbing were even lower than the tap results. This indicates that there is virtually no lead or copper in the water and that household plumbing may contribute to lead and copper at the tap.							
pH	Soda ash is added to reduce water corrosivity by increasing pH and alkalinity	s.u.	Daily Average 7.6	Min Daily Average 7.3	Average 7.6	Minimum 6.8	Yes
The Washington State Department of Health requires Everett to operate corrosion control treatment at or above a minimum daily average pH of 7.4. Everett measures pH six times per day (once every four hours). The average daily pH cannot be below 7.4 for more than nine days every six months. In 2021, the average daily pH dropped below 7.4 for one day.							

USEPA required lead statement: If present, elevated levels of lead can cause serious health problems, especially for pregnant women and young children. Lead in drinking water is primarily from materials and components associated with service lines and home plumbing. The City of Everett Utilities Division is responsible for providing high quality drinking water, but cannot control the variety of materials used in plumbing components. When your water has been sitting for several hours, you can minimize the potential for lead exposure by flushing your tap for 30 seconds to two minutes before using water for drinking or cooking. If you are concerned about lead in your water, you may wish to have your water tested. Information on lead in drinking water, testing methods and steps you can take to minimize exposure is available from the Safe Drinking Water Hotline at 1-800-426-4791 or online at epa.gov/safewater/lead.

Detected Unregulated Contaminants

Parameter	Units	Ideal Level/ Goal (MCLG)	Monroe Water Results: Range Detected	Monroe Water Results: Average Value
Bromodichloromethane	ppb	0	1.2-2.3	1.7
Chloroform (trichloromethane)	ppb	70	26-62	41
Dichloroacetic Acid	ppb	0	4-17	11
Trichloroacetic Acid	ppb	20	17-25	22
These substances are disinfection by-products for which no MCL standard has been set, but which must be monitored to determine compliance with the USEPA Stage 2 Disinfection By-products Rule MCLs for Total Trihalomethanes and Haloacetic Acids (5).				

IMPORTANT TERMS

Turbidity – Turbidity is a measure of particulates suspended in water in nephelometric turbidity units (NTU) and is an important test in determining drinking water quality. Particulates in water can include bacteria, viruses and protozoans that can cause disease.

Maximum Contaminant Level Goal (MCLG) – The level of a contaminant in drinking water below which there is no known or expected risk to health. MCLGs allow for a margin of safety.

Maximum Contaminant Level (MCL) – The highest level of a contaminant that is allowed in drinking water. MCLs are set as close to the MCLGs as feasible using the best available water treatment technology.

Maximum Residual Disinfectant Level (MRDL) – The highest level of a disinfectant allowed in drinking water. There is convincing evidence that addition of a disinfectant is necessary for control of microbial contaminants.

Maximum Residual Disinfectant Level Goal (MRDLG) – The level of a drinking water disinfectant below which there is no known or expected risk to health. MRDLGs do not reflect the benefits of the use of disinfectants to control microbial contaminants.

Treatment Technique (TT) – A required process intended to reduce the level of a contaminant in drinking water.

Action Level (AL) – The concentration of a contaminant, which, if exceeded, triggers treatment or other requirements which a water system must follow.

Parts per Million (ppm)/ Parts per Billion (ppb) – A part per million means that one part of a particular contaminant is present for every million parts of water. Similarly, parts per billion indicate the amount of a contaminant per billion parts of water.

Not Applicable (N/A) – Means EPA has not established MCLGs for these substances.

REQUIRED POLYMER STATEMENT:

During water treatment, organic polymer coagulants are added to improve the coagulation and filtration processes that remove particulates from water. The particulates that are removed can include viruses, bacteria and other disease-causing organisms. The USEPA sets limits on the type and amount of polymer that a water system can add to the water. In addition to the EPA limits, the State of Washington requires that all polymers used be certified safe for potable water use by an independent testing organization (NSF International). During treatment, Everett adds only NSF approved polymers and the levels used are far below the safe limits set by the USEPA.

THE FOLLOWING STATEMENTS ARE REQUIRED BY THE US ENVIRONMENTAL PROTECTION AGENCY.

Your drinking water facts and figures

All water sources (both tap water and bottled water) contain impurities. As water flows over the surface of the land or through the ground, it dissolves naturally occurring minerals and, in some cases, radioactive material, and can pick up substances resulting from the presence of animals or from human activity. Contaminants that may be present in source water include:

- Microbial contaminants such as viruses and bacteria, which may come from sewage treatment plants, septic systems, agricultural livestock operations and wildlife.
- Inorganic contaminants, such as salts and metals, which can be naturally occurring or result from urban surface water, industrial or domestic wastewater discharges, oil and gas production, mining or farming.
- Pesticides and herbicides, which may come from a variety of sources such as agriculture, urban surface water and residential uses.
- Organic chemical contaminants, including synthetic and volatile organic chemicals, which are by-products of industrial processes and petroleum production, and may also come from gas stations, urban stormwater runoff and septic systems.
- Radioactive contaminants, which can be naturally occurring or be the result of oil and gas production and mining activities.

In order to ensure that tap water is safe to drink, US Environmental Protection Agency (EPA) prescribes regulations which limit the amount of certain contaminants in water provided by public water systems. Food and Drug Administration (FDA) regulations establish limits for contaminants in bottled water which must provide the same protection for public health.

Drinking water, including bottled water, may reasonably be expected to contain at least small amounts of some contaminants. The presence of contaminants does not necessarily indicate that water poses a health risk. More information about contaminants and potential health effects can be obtained by calling the EPA Safe Drinking Water Hotline at 1-800-426-4791.

Some people may be more vulnerable to contaminants in drinking water than the general population. Immunocompromised people, such as people with cancer undergoing chemotherapy, people who have undergone organ transplants, people with HIV/AIDS or other immune system disorders, some elderly and infants can be particularly at risk from infections. These people should seek advice about drinking water from their health care providers. EPA and US Center for Disease Control (CDC) guidelines on appropriate means to lessen risk of infection by Cryptosporidium and other microbial contaminants are available from the Safe Drinking Water Hotline at 1-800-426-4791.



City of Monroe
Water Quality Offices
360-863-4616
sbarr@monroewa.gov

State Department of Health
1-800-521-0323
doh.wa.gov/ehp/dw

US Environmental Protection Agency
1-800-426-4791
epa.gov/safewater

To get involved in decisions affecting your drinking water, contact John Lande at jlande@monroewa.gov

City of Monroe elected officials
MAYOR: Greoffrey Thomas
CITY COUNCIL: Kevin Hanford, Ed Davis, Jason Gamble, Kirk Scarboro, Heather Fulcher, Tami Kinney & Kyle Fisher

MONROE
WASHINGTON

CONSUMER CONFIDENCE REPORT 2022



TASTE • VALUE • QUALITY

Water is a life-essential resource— yet, at less than a penny a gallon, it costs very little compared to its value.

Your water rates pay for everything it takes to operate our water system, from storage and treatment to delivering the water to your tap. Your water rates also help pay for water system improvements that ensure that we will provide high-quality drinking water for generations to come. As this year's Drinking Water Quality Report shows, this is an exceptional value for the clean, safe, great tasting drinking water you receive.

MONROE
WASHINGTON

City of Monroe Public Works Department
806 W. Main ST WA 98272

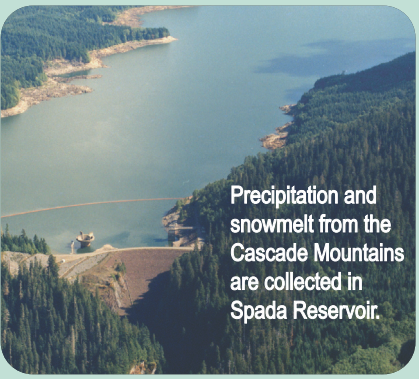

Precipitation and snowmelt from the Cascade Mountains are collected in Spada Reservoir.

FROM SPADA TO YOU

Clean, safe drinking water delivered to your tap

Your drinking water comes from Spada Reservoir, located about 15 miles northeast of Monroe at the headwaters of the Sultan River. This 50-billion-gallon storage facility serves as a collection point for rain and snowmelt from the Cascade Mountains. It was created in 1964 through a partnership between the City of Everett and the Snohomish County PUD as part of the Jackson Hydroelectric Project.

Spada Reservoir is located in the Upper Sultan River Watershed, an area encompassing more than 80 square miles. This is one of the wettest watersheds in the continental United States. The average annual rainfall is about 165 inches—three times the rainfall in Monroe.

Water quality in the Sultan Basin is carefully monitored. To protect the naturally pristine water in Spada Reservoir, the watershed is patrolled and human activities are limited to minimize the impact on water quality. We continue to evaluate and adjust our security measures on an ongoing basis.

Water is a precious resource.



From Spada, water travels to Chaplain Reservoir, where the Everett's water treatment plant is located.

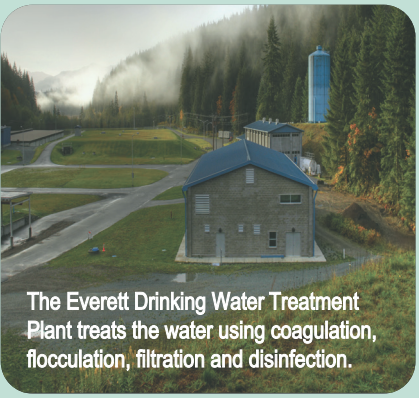

The Everett Drinking Water Treatment Plant treats the water using coagulation, flocculation, filtration and disinfection.

ENSURING AN ADEQUATE SUPPLY

Conservation helps meet the needs of people, industries, businesses and farms, while also helping fish and other aquatic life



Water transmission lines carry drinking water to Everett.



Treated water is delivered to about 615,000 people, or 75 percent of the businesses and households in Snohomish County.

Everett provides water to the majority of water systems in Snohomish County and administers a regional water use efficiency program. The program is planned and developed with the water systems we serve and funded from water system revenues.

More than $8.6 million has been invested in regional water conservation activities since 2001. Our current water use efficiency program includes such activities as school education, indoor and outdoor water conservation kits, leak detection kits and support, and indoor/outdoor commercial water audits. Through these efforts, we have saved more than 7.95 million gallons per day (MGD)—enough water to fill nearly 179,221 bathtubs a day.

Conservation planning previously occurred in six-year cycles as part of Everett's comprehensive water system plan. The first plan covered the period from 2001 through 2006, the second from 2007 through 2012 and the third from 2013 through 2019. The current Comprehensive Water Plan is a ten-year plan, issued in mid-2021. The water use efficiency program goal for 2020-2029 will reduce the regional demand for water by approximately 1.4 MGD on an annual basis and will include school education and conservation kits, along with continued support of large water users.

In 2022, 472 workshops were conducted with school classes throughout Snohomish County, reaching 12,465 students. Water systems purchased 1,405 indoor conservation kits and 3,767 outdoor conservation kits. These activities saved an estimated 0.66 MGD regionally.

For conservation tips and information, visit monroewa.gov/483/conservation

2022 Water Quality Analysis Results

City of Monroe

Detected Regulated Contaminants

Parameter	Major Source	Units	EPA Regulations		Monroe Water Results		
			Ideal Level/ Goal (MCLG)	Maximum Allowable (MCL)	Range or Other	Average Value or Highest Result	Comply?
Total Coliform Bacteria	Naturally present in the environment	% Positive	0	5% Positive per Month	None	0%	Yes
Total coliform bacteria monitoring tracks microbial quality in the water distribution system. Monroe collects 31 samples per month or 372 per year. No more than 5 percent of the monthly totals can be positive for total coliform. No total coliform was detected in 2021.							
Fluoride	Dental health additive	ppm	2	4	0.3-0.8	0.7	Yes
Fluoride is added to your water in carefully controlled levels for dental health.							
Residual Disinfectant Level (free chlorine)	Added as a drinking water disinfectant	ppm	4.0 (MRDLG)	4.0 (MRDL)	0.3-1.1	0.75	Yes
Haloacetic Acids (5) (HAA5)	By-product of drinking water chlorination	ppb	N/A	60	23-40	32	Yes
Total Trihalomethanes (TTHM)	By-product of drinking water chlorination	ppb	N/A	80	25-64	45	Yes
Haloacetic acids and trihalomethanes form as by-products of the chlorination process that is used to kill or inactivate disease-causing microbes. The TTHM and HAA5 results are from four locations in Monroe, which are monitored to determine compliance with current regulations.							
Turbidity	Soil erosion	NTU	N/A	TT	100%	0.05	Yes
The values reported are the lowest monthly percentage of samples that met the EPA turbidity limit and the highest four hour combined filtered water turbidity measurement obtained during the year. The EPA turbidity limit is 0.3 NTU. In 2022, no filtered water turbidity results exceeded 0.3 NTU so the lowest percentage that met the EPA limit was 100%. The plant targets production of filter water turbidities of 0.10 NTU or less.							

Lead, Copper and pH

Parameter	Major Source	Units	EPA Regulations		Everett/Monroe Water Results		
			Ideal Level/ Goal (MCLG)	Action Level (AL)	90th % Level	Homes Exceeding the AL	Comply?
Lead	Plumbing, erosion of natural deposits	ppb	0	15	2.0 5.2	0 of 108 (0 of 4)	Yes
Copper	Plumbing, erosion of natural deposits	ppm	1.3	1.3	.0931 0.1	0 of 108 (0 of 4)	Yes
USEPA and state regulations require water systems to monitor for the presence of lead and copper at household taps every three years. Lead and copper monitoring is conducted by Everett and many of the water systems that it supplies in the combined service area as a regional group. The above data was collected in 2021. The next required round of sampling will be in 2024. The 90th percent level is the highest result obtained in 90 percent of the samples collected when the results are ranked in order from lowest to highest. In the past, the results for water tested before it enters household plumbing were even lower than the tap results. This indicates that there is virtually no lead or copper in the water and that household plumbing may contribute to lead and copper at the tap.							
pH	Soda ash is added to reduce water corrosivity by increasing pH and alkalinity	s.u.	Daily Average 7.6	Min Daily Average 7.3	Average 7.6	Minimum 6.8	Yes
The Washington State Department of Health requires Everett to operate corrosion control treatment at or above a minimum daily average pH of 7.4. Everett measures pH six times per day (once every four hours). The average daily pH cannot be below 7.4 for more than nine days every six months. In 2022, the average daily pH dropped below 7.4 for one day.							

USEPA required lead statement: If present, elevated levels of lead can cause serious health problems, especially for pregnant women and young children. Lead in drinking water is primarily from materials and components associated with service lines and home plumbing. The City of Everett Utilities Division is responsible for providing high quality drinking water, but cannot control the variety of materials used in plumbing components. When your water has been sitting for several hours, you can minimize the potential for lead exposure by flushing your tap for 30 seconds to two minutes before using water for drinking or cooking. If you are concerned about lead in your water, you may wish to have your water tested. Information on lead in drinking water, testing methods and steps you can take to minimize exposure is available from the Safe Drinking Water Hotline at 1-800-426-4791 or online at epa.gov/safewater/lead.

Detected Unregulated Contaminants

Parameter	Units	Ideal Level/ Goal (MCLG)	Monroe Water Results	
			Range Detected	Average Value
Bromodichloromethane	ppb	0	1.1-2.2	1.6
Chloroform (trichloromethane)	ppb	70	23-50	33
Dichloroacetic Acid	ppb	0	5-16	11
Trichloroacetic Acid	ppb	20	15-26	21
These substances are disinfection by-products for which no MCL standard has been set, but which must be monitored to determine compliance with the USEPA Stage 2 Disinfection By-products Rule MCLs for Total Trihalomethanes and Haloacetic Acids (5).				

IMPORTANT TERMS

Turbidity – Turbidity is a measure of particulates suspended in water in nephelometric turbidity units (NTU) and is an important test in determining drinking water quality. Particulates in water can include bacteria, viruses and protozoans that can cause disease.

Maximum Contaminant Level Goal (MCLG) – The level of a contaminant in drinking water below which there is no known or expected risk to health. MCLGs allow for a margin of safety.

Maximum Contaminant Level (MCL) – The highest level of a contaminant that is allowed in drinking water. MCLs are set as close to the MCLGs as feasible using the best available water treatment technology.

Maximum Residual Disinfectant Level (MRDL) – The highest level of a disinfectant allowed in drinking water. There is convincing evidence that addition of a disinfectant is necessary for control of microbial contaminants.

Maximum Residual Disinfectant Level Goal (MRDLG) – The level of a drinking water disinfectant below which there is no known or expected risk to health. MRDLGs do not reflect the benefits of the use of disinfectants to control microbial contaminants.

Treatment Technique (TT) – A required process intended to reduce the level of a contaminant in drinking water.

Action Level (AL) – The concentration of a contaminant, which, if exceeded, triggers treatment or other requirements which a water system must follow.

Parts per Million (ppm)/ Parts per Billion (ppb) – A part per million means that one part of a particular contaminant is present for every million parts of water. Similarly, parts per billion indicate the amount of a contaminant per billion parts of water.

Not Applicable (N/A) – Means EPA has not established MCLGs for these substances.

REQUIRED POLYMER STATEMENT:

During water treatment, organic polymer coagulants are added to improve the coagulation and filtration processes that remove particulates from water. The particulates that are removed can include viruses, bacteria and other disease-causing organisms. The USEPA sets limits on the type and amount of polymer that a water system can add to the water. In addition to the EPA limits, the State of Washington requires that all polymers used be certified safe for potable water use by an independent testing organization (NSF International). During treatment, Everett adds only NSF approved polymers and the levels used are far below the safe limits set by the USEPA.

THE FOLLOWING STATEMENTS ARE REQUIRED BY THE US ENVIRONMENTAL PROTECTION AGENCY.

Your drinking water facts and figures

All water sources (both tap water and bottled water) contain impurities. As water flows over the surface of the land or through the ground, it dissolves naturally occurring minerals and, in some cases, radioactive material, and can pick up substances resulting from the presence of animals or from human activity. Contaminants that may be present in source water include:

- Microbial contaminants such as viruses and bacteria, which may come from sewage treatment plants, septic systems, agricultural livestock operations and wildlife.
- Inorganic contaminants, such as salts and metals, which can be naturally occurring or result from urban surface water, industrial or domestic wastewater discharges, oil and gas production, mining or farming.
- Pesticides and herbicides, which may come from a variety of sources such as agriculture, urban surface water and residential uses.
- Organic chemical contaminants, including synthetic and volatile organic chemicals, which are by-products of industrial processes and petroleum production, and may also come from gas stations, urban stormwater runoff and septic systems.
- Radioactive contaminants, which can be naturally occurring or be the result of oil and gas production and mining activities.

In order to ensure that tap water is safe to drink, US Environmental Protection Agency (EPA) prescribes regulations which limit the amount of certain contaminants in water provided by public water systems. Food and Drug Administration (FDA) regulations establish limits for contaminants in bottled water which must provide the same protection for public health.

Drinking water, including bottled water, may reasonably be expected to contain at least small amounts of some contaminants. The presence of contaminants does not necessarily indicate that water poses a health risk. More information about contaminants and potential health effects can be obtained by calling the EPA Safe Drinking Water Hotline at 1-800-426-4791.

Some people may be more vulnerable to contaminants in drinking water than the general population. Immunocompromised people, such as people with cancer undergoing chemotherapy, people who have undergone organ transplants, people with HIV/AIDS or other immune system disorders, some elderly and infants can be particularly at risk from infections. These people should seek advice about drinking water from their health care providers. EPA and US Center for Disease Control (CDC) guidelines on appropriate means to lessen risk of infection by Cryptosporidium and other microbial contaminants are available from the Safe Drinking Water Hotline at 1-800-426-4791.



City of Monroe
Water Quality Offices
360-863-4616
sbarr@monroewa.gov

State Department of Health
1-800-521-0323
doh.wa.gov/ehp/dw

US Environmental Protection Agency
1-800-426-4791
epa.gov/safewater

To get involved in decisions affecting your drinking water, contact John Lande at jlande@monroewa.gov

City of Monroe elected officials
MAYOR: Greoffrey Thomas
CITY COUNCIL: Kevin Hanford, Ed Davis, Jason Gamble, Kirk Scarboro, Heather Fulcher, Tami Kinney & Kyle Fisher

MONROE
WASHINGTON

CONSUMER CONFIDENCE REPORT 2023



TASTE • VALUE • QUALITY

Water is a life-essential resource— yet, at less than a penny a gallon, it costs very little compared to its value.

Your water rates pay for everything it takes to operate our water system, from storage and treatment to delivering the water to your tap. Your water rates also help pay for water system improvements that ensure that we will provide high-quality drinking water for generations to come. As this year's Drinking Water Quality Report shows, this is an exceptional value for the clean, safe, great tasting drinking water you receive.

MONROE
WASHINGTON

City of Monroe Public Works Department
769 Village Way WA 98272

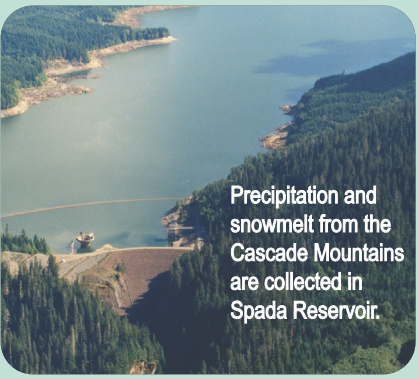

Precipitation and snowmelt from the Cascade Mountains are collected in Spada Reservoir.

FROM SPADA TO YOU

Clean, safe drinking water delivered to your tap

Your drinking water comes from Spada Reservoir, located about 15 miles northeast of Monroe at the headwaters of the Sultan River. This 50-billion-gallon storage facility serves as a collection point for rain and snowmelt from the Cascade Mountains. It was created in 1964 through a partnership between the City of Everett and the Snohomish County PUD as part of the Jackson Hydroelectric Project.

Spada Reservoir is located in the Upper Sultan River Watershed, an area encompassing more than 80 square miles. This is one of the wettest watersheds in the continental United States. The average annual rainfall is about 165 inches—three times the rainfall in Monroe.

Water quality in the Sultan Basin is carefully monitored. To protect the naturally pristine water in Spada Reservoir, the watershed is patrolled and human activities are limited to minimize the impact on water quality. We continue to evaluate and adjust our security measures on an ongoing basis.

Water is a precious resource.



From Spada, water travels to Chaplain Reservoir, where the Everett's water treatment plant is located.

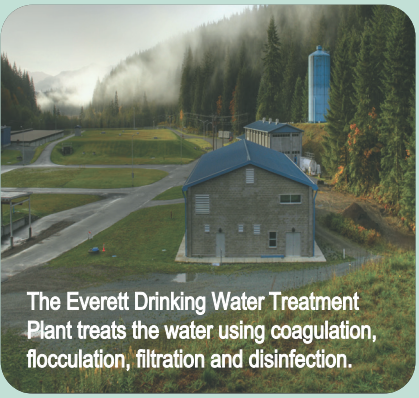

The Everett Drinking Water Treatment Plant treats the water using coagulation, flocculation, filtration and disinfection.

ENSURING AN ADEQUATE SUPPLY

Conservation helps meet the needs of people, industries, businesses and farms, while also helping fish and other aquatic life

Everett provides water to the majority of water systems in Snohomish County and administers a regional Water Use Efficiency (WUE) program. The program is planned and developed with the water systems we serve and funded from water system revenues.

More than $8.8 million has been invested in regional water conservation activities since 2001. Our current water use efficiency program includes such activities as school education, indoor and outdoor water conservation kits, leak detection kits and support, and indoor/outdoor commercial water audits. Through these efforts, we have saved more than 8.27 million gallons per day (MGD)—enough water to fill nearly 195,277 bathtubs a day.

Conservation planning previously occurred in ten-year cycles as part of Everett's comprehensive water system plan.

The current Comprehensive Water System plan (2020-2029) was issued in mid-2021. The plan states that the WUE program will reduce the regional demand for water by approximately 1.4 MGD on an annual basis through school education and conservation kits, along with continues support of large water users.

In 2023, 546 workshops were conducted with school classes throughout Snohomish County, reaching 14,355 students. Water systems purchased 2,205 indoor conservation kits and 4,296 outdoor conservation kits. These activities saved an estimated 0.68 MGD regionally.



Water transmission lines carry drinking water to Everett.



Treated water is delivered to about 640,000 people, or 75 percent of the businesses and households in Snohomish County.

For conservation tips and information, visit monroewa.gov/483/conservation

2023 Water Quality Analysis Results

City of Monroe

Detected Regulated Contaminants

Parameter	Major Source	Units	EPA Regulations		Monroe Water Results		
			Ideal Level/ Goal (MCLG)	Maximum Allowable (MCL)	Range or Other	Average Value or Highest Result	Comply?
Total Coliform Bacteria	Naturally present in the environment	% Positive	0	5% Positive per Month	None	0%	Yes
Total coliform bacteria monitoring tracks microbial quality in the water distribution system. Monroe collects 31 samples per month or 372 per year. No more than 5 percent of the monthly totals can be positive for total coliform. No total coliform was detected in 2023.							
Fluoride	Dental health additive	ppm	2	4	0.5-0.8	0.7	Yes
Fluoride is added to your water in carefully controlled levels for dental health.							
Residual Disinfectant Level (free chlorine)	Added as a drinking water disinfectant	ppm	4.0 (MRDLG)	4.0 (MRDL)	0.2-1.1	0.7	Yes
Haloacetic Acids (5) (HAA5)	By-product of drinking water chlorination	ppb	N/A	60	24-41	32	Yes
Total Trihalomethanes (TTHM)	By-product of drinking water chlorination	ppb	N/A	80	27-54	41	Yes
Haloacetic acids and trihalomethanes form as by-products of the chlorination process that is used to kill or inactivate disease-causing microbes. The TTHM and HAA5 results are from four locations in Monroe, which are monitored to determine compliance with current regulations.							
Turbidity	Soil erosion	NTU	N/A	TT	100%	0.04	Yes
The values reported are the lowest monthly percentage of samples that met the EPA turbidity limit and the highest four hour combined filtered water turbidity measurement obtained during the year. The EPA turbidity limit is 0.3 NTU. In 2022, no filtered water turbidity results exceeded 0.3 NTU so the lowest percentage that met the EPA limit was 100%. The plant targets production of filter water turbidities of 0.10 NTU or less.							

Lead, Copper and pH

Parameter	Major Source	Units	EPA Regulations		Everett/Monroe Water Results		
			Ideal Level/ Goal (MCLG)	Action Level (AL)	90th % Level	Homes Exceeding the AL	Comply?
Lead	Plumbing, erosion of natural deposits	ppb	0	15	2.0 5.2	0 of 108 (0 of 4)	Yes
Copper	Plumbing, erosion of natural deposits	ppm	1.3	1.3	.093 0.1	0 of 108 (0 of 4)	Yes
USEPA and state regulations require water systems to monitor for the presence of lead and copper at household taps every three years. Lead and copper monitoring is conducted by Everett and many of the water systems that it supplies in the combined service area as a regional group. The above data was collected in 2021. The next required round of sampling will be in 2024. The 90th percent level is the highest result obtained in 90 percent of the samples collected when the results are ranked in order from lowest to highest. In the past, the results for water tested before it enters household plumbing were even lower than the tap results. This indicates that there is virtually no lead or copper in the water and that household plumbing may contribute to lead and copper at the tap.							
pH	Soda ash is added to reduce water corrosivity by increasing pH and alkalinity	s.u.	Daily Average 7.6	Min Daily Average 7.3	Average 7.6	Minimum 7.1	Yes
The Washington State Department of Health requires Everett to operate corrosion control treatment at or above a minimum daily average pH of 7.4. Everett measures pH six times per day (once every four hours). The average daily pH cannot be below 7.4 for more than nine days every six months. In 2022, the average daily pH dropped below 7.4 for one day.							

USEPA required lead statement: If present, elevated levels of lead can cause serious health problems, especially for pregnant women and young children. Lead in drinking water is primarily from materials and components associated with service lines and home plumbing. The City of Everett Utilities Division is responsible for providing high quality drinking water, but cannot control the variety of materials used in plumbing components. When your water has been sitting for several hours, you can minimize the potential for lead exposure by flushing your tap for 30 seconds to two minutes before using water for drinking or cooking. If you are concerned about lead in your water, you may wish to have your water tested. Information on lead in drinking water, testing methods and steps you can take to minimize exposure is available from the Safe Drinking Water Hotline at 1-800-426-4791 or online at epa.gov/safewater/lead.

Unregulated Contaminant Monitoring Rule 5 (UCMR5)

The City collected quarterly samples at the entry point to the water distribution system according to the Fifth Unregulated Contaminant Rule (UCMR5). These samples were tested for 29 per- and polyfluoroalkyl substances (PFAS) and lithium. No PFA's or lithium were detected.

Detected Unregulated Contaminants

Parameter	Units	Ideal Level/ Goal (MCLG)	Monroe Water Results	
			Range Detected	Average Value
Bromodichloromethane	ppb	0	1.4-3.1	2.2
Chloroform (trichloromethane)	ppb	70	25-63	42
Dichloroacetic Acid	ppb	0	4-18	11
Trichloroacetic Acid	ppb	20	15-19	17
These substances are disinfection by-products for which no MCL standard has been set, but which must be monitored to determine compliance with the USEPA Stage 2 Disinfection By-products Rule MCLs for Total Trihalomethanes and Haloacetic Acids (5).				

IMPORTANT TERMS

Turbidity – Turbidity is a measure of particulates suspended in water in nephelometric turbidity units (NTU) and is an important test in determining drinking water quality. Particulates in water can include bacteria, viruses and protozoans that can cause disease.

Maximum Contaminant Level Goal (MCLG) – The level of a contaminant in drinking water below which there is no known or expected risk to health. MCLGs allow for a margin of safety.

Maximum Contaminant Level (MCL) – The highest level of a contaminant that is allowed in drinking water. MCLs are set as close to the MCLGs as feasible using the best available water treatment technology.

Maximum Residual Disinfectant Level (MRDL) – The highest level of a disinfectant allowed in drinking water. There is convincing evidence that addition of a disinfectant is necessary for control of microbial contaminants.

Maximum Residual Disinfectant Level Goal (MRDLG) – The level of a drinking water disinfectant below which there is no known or expected risk to health. MRDLGs do not reflect the benefits of the use of disinfectants to control microbial contaminants.

Treatment Technique (TT) – A required process intended to reduce the level of a contaminant in drinking water.

Action Level (AL) – The concentration of a contaminant, which, if exceeded, triggers treatment or other requirements which a water system must follow.

Parts per Million (ppm)/ Parts per Billion (ppb) – A part per million means that one part of a particular contaminant is present for every million parts of water. Similarly, parts per billion indicate the amount of a contaminant per billion parts of water.

Not Applicable (N/A) – Means EPA has not established MCLGs for these substances.

REQUIRED POLYMER STATEMENT:

During water treatment, organic polymer coagulants are added to improve the coagulation and filtration processes that remove particulates from water. The particulates that are removed can include viruses, bacteria and other disease-causing organisms. The USEPA sets limits on the type and amount of polymer that a water system can add to the water. In addition to the EPA limits, the State of Washington requires that all polymers used be certified safe for potable water use by an independent testing organization (NSF International). During treatment, Everett adds only NSF approved polymers and the levels used are far below the safe limits set by the USEPA.

THE FOLLOWING STATEMENTS ARE REQUIRED BY THE US ENVIRONMENTAL PROTECTION AGENCY.

Your drinking water facts and figures

All water sources (both tap water and bottled water) contain impurities. As water flows over the surface of the land or through the ground, it dissolves naturally occurring minerals and, in some cases, radioactive material, and can pick up substances resulting from the presence of animals or from human activity. Contaminants that may be present in source water include:

- Microbial contaminants such as viruses and bacteria, which may come from sewage treatment plants, septic systems, agricultural livestock operations and wildlife.
- Inorganic contaminants, such as salts and metals, which can be naturally occurring or result from urban surface water, industrial or domestic wastewater discharges, oil and gas production, mining or farming.
- Pesticides and herbicides, which may come from a variety of sources such as agriculture, urban surface water and residential uses.
- Organic chemical contaminants, including synthetic and volatile organic chemicals, which are by-products of industrial processes and petroleum production, and may also come from gas stations, urban stormwater runoff and septic systems.
- Radioactive contaminants, which can be naturally occurring or be the result of oil and gas production and mining activities.

In order to ensure that tap water is safe to drink, US Environmental Protection Agency (EPA) prescribes regulations which limit the amount of certain contaminants in water provided by public water systems. Food and Drug Administration (FDA) regulations establish limits for contaminants in bottled water which must provide the same protection for public health.

Drinking water, including bottled water, may reasonably be expected to contain at least small amounts of some contaminants. The presence of contaminants does not necessarily indicate that water poses a health risk. More information about contaminants and potential health effects can be obtained by calling the EPA Safe Drinking Water Hotline at 1-800-426-4791.

Some people may be more vulnerable to contaminants in drinking water than the general population. Immunocompromised people, such as people with cancer undergoing chemotherapy, people who have undergone organ transplants, people with HIV/AIDS or other immune system disorders, some elderly and infants can be particularly at risk from infections. These people should seek advice about drinking water from their health care providers. EPA and US Center for Disease Control (CDC) guidelines on appropriate means to lessen risk of infection by Cryptosporidium and other microbial contaminants are available from the Safe Drinking Water Hotline at 1-800-426-4791.



City of Monroe
Water Quality Offices
360-863-4616
sbarr@monroewa.gov

State Department of
Health 1-800-521-0323
doh.wa.gov/ehp/dw

US Environmental Protection Agency
1-800-426-4791
epa.gov/safewater

To get involved in decisions affecting your drinking water, contact John Lande Public Works Sewer and Water Operations Manager at jlande@monroewa.gov

City of Monroe elected officials
MAYOR: Greoffrey Thomas
CITY COUNCIL: Kevin Hanford, Jacob Walker, Jason Gamble, Kirk Scarboro, Heather Fulcher, Tami Beaumont & Kyle Fisher

MONROE
WASHINGTON

Appendix W-H

Coliform Monitoring Plan

THIS PAGE INTENTIONALLY BLANK

Coliform Monitoring Plan Template

Coliform Monitoring Plan for: Monroe Water System

A. System Information

Plan Date: April 1, 2016

Water System Name Monroe Water Systems	**County** Snohomish	**System I.D. Number** 55820
Name of Plan Preparer Jordan Ottow	**Position** Environmental Compliance Supervisor	**Daytime Phone #** 360-863-4546
Sources: DOH Source Number, Source Name	DOH Source #: S01, S02, S03 Source Name: Everett	
Storage: List and Describe	North Hill 1.15 MG, Ingraham 2 MG, Trombley/Res 5 4.5 MG, DOC .75 MG, Springhill 100,000g, Sky Meadow 100,000g, Lord Hill 137,500g	
Treatment: Source Number & Process	DOH Source #: 92. Process: off-site generated hypochlorite (stored).	
Pressure Zones: Number and name	TBD	
Population by Pressure Zone	TBD	
Number of Routine Samples Required Monthly by Regulation: 20 (25 in Sept)	**Number of Sample Sites Needed to Represent the Distribution System:** 20	

B. Laboratory Information

Laboratory Name Monroe Waste Water Treatment Plant Laboratory	**Office Phone #** 360-863-3220
Address 522 S. Sam St. Monroe, WA 98272	**After Hours Phone #** 425-754-3771
Hours of Operation M – F, 7am-3:30pm	
Contact Name Linda Gleason – Lab Analyst	
Emergency Laboratory Name AM Test Laboratory	**Office Phone #** 425-885-1664
Address 13600 NE 126th Pl. #C Kirkland, WA 98034	**After Hours #**
Hours of Operation M-F, 7am – 5pm	
Contact Name Chris Young – Water Quality	

C. Wholesaling

	Yes	No
	X	
Water System Name: Marbelo Water System Contact Name: Dave or Sandra Telephone Numbers: 206-282-4200		
	X	
Water System Name: Washington State Department of Corrections Contact Name: Kelly Dykes Telephone Numbers: 360-794-2349		

D. Routine, Repeat, and Triggered Source Sample Locations*

Upstream sample site = (us) **Downstream sample site = (ds)**

Investigative sample = i

Location/Address for Routine Sample Sites		**Location/Address for** Repeat Sample Sites		
X1. **12845 Phillips Ridge Rd.**		**1-1. 12845 Phillips Ridge Rd.**		
		1-2. 12821 Phillips Ridge Rd. (us)		
		1-3. 12859 Phillips Ridge Rd. (ds)		
		1-4.		
X2. 17288 Beaton Rd.		**2-1. 17288 Beaton Rd.**		
		2-2. 17301 Beaton Rd. (Us)		
		2-3. 17201 Beaton Rd. (Ds)		
		2-4.		
X3. 16886 Wales St.		**3-1. 16886 Wales St.**		
		3-2. 16904 Wales St. (Us)		
		3-3. 16807 Wales St. (Ds)		
		3-4.		
X4. 17510 Mountain View Rd.		**4-1. 17510 Mountain View Rd.**		

		4-2. 17528 Mountain View Rd. (Us)		
		4-3. 17492 Mountain View Rd. (Ds)		
		4-4.		
X5. 16022 -169th Pl. SE, Snohomish		**5-1. 16022 -169th Pl. SE**		
		5-2. 16030 -169th Pl. SE (Us)		
		5-3. 16016 -169th Pl. SE (Ds)		
		5-4.		
X6. 15113 -141st Ave. SE, Snohomish		**6-1. 15113 -141st Ave. SE. Snoho**		
		6-2. 15004 -141st Ave. SE. Snoho (Us)		
		6-3. 15131 -141st Ave. SE. Snoho (Ds)		
		6-4.		
X7. 12814 -127th Ave. SE, Snohomish		**7-1 12814 -127th Ave. SE**		
		7-2. 12830 -127th Ave. SE (Us)		
		7-3. 12808 -127th Ave. SE (Ds)		
		7-4.		
X8. 12125 Treosti Rd., Snohomish		**8-1. 12125 Treosti Rd.**		
		8-2. 12320 Old Sno-Monroe Rd. (Us)		
		8-3. 11431 Old Sno-Monroe Rd.(Ds)		
		8-4.		
X9. 16923 W. Main St.		**9-1. 16923 W. Main St.**		
		9-2. 16624 -167th Ave. SE. (Us)		
		9-3. 17150 W. Main St. (Ds)		
		9-4.		
X10. 17585 -163rd Pl. SE.		**10-1. 17585 -163rd Pl. SE.**		
		10-2. 17581 -163rd Pl. SE. (Us)		
		10-3. 16700 -177th St. (Ds)		

		10-4.		
X11. 17839 -160th Pl. SE.		**11-1. 17839 -160th Pl. SE.**		
		11-2. 17729 -160th Pl. SE. (Us)		
		11-3. 17851 -160th Pl. SE. (Ds)		
		11-4.		
X12. 17201 -136th Pl. SE.		**12-1. 17201 -136th Pl. SE.**		
		12-2. 17167 -136th Pl. SE. (Us)		
		12-3. 17225 -136th Pl. SE. (Ds)		
		12-4.		
X13. 18470 Blueberry Ln.		**13-1. 18470 Blueberry Ln.**		
		13-2. 18510 Blueberry Ln. (Us)		
		13-3. 18450 Blueberry Ln. (Ds)		
		13-4.		
X14. 324 Elizabeth St.		**14-1. 324 Elizabeth St.**		
		14-2. 320 Elizabeth St. (Us)		
		14-3. 336 Elizabeth St. (Ds)		
		14-4.		
X15. 408 Park St.		**15-1. 408 Park St.**		
		15-2. 440 Park St. (Us)		
		15-3. 330 Park St. (Ds)		
		15-4.		
X16. 330 Sumac Dr.		**16-1. 330 Sumac Dr.**		
		16-2. 315 Sumac Dr. (Us)		
		16-3. 522 S. Sam St. (Ds)		
		16-4.		
X17. 135 Charles St.		**17-1. 135 Charles St.**		
		17-2. 131 Charles St. (Us)		

		17-3. 144 Charles St. (Ds)		
		17-4.		
X18. 15423 Calhoun Rd.		**18-1. 15423 Calhoun Rd.**		
		18-2. 15403 Calhoun Rd. (Us)		
		18-3. 15427 Calhoun Rd. (Ds)		
		18-4.		
X19. 13223 Wagner Rd.		**19-1. 13223 Wagner Rd.**		
		19-2. 13305 Wagner Rd. (Us)		
		19-3. 22122 -132nd St. (Ds)		
		19-4.		
X20. 20309 -118th St.		**20-1. 20309 -118th St.**		
		20-2. 20317 -118th St. (Us)		
		20-3. 20305 -118th St. (Ds)		
		20-4.		
X21. 12531 Chain Lk. Rd.		**21-1. 12531 Chain Lk Rd.**		
		21-2. 12514 Chain Lk. Rd. (Us)		
		21-3. 12606 Chain Lk. Rd. (Ds)		
		21-4.		
X1i. Spinghill Reservoir		**1i-1. 15006 -139th Ave. SE. Snoh**		
		1i-2. 15505/6 -139th Ave. SE Snoho. (Us)		
		1i-3. 15505 139th Ave. SE. Snoh (Ds)		
		1i-4.		
X2i. Sky Meadow Reservoir		**2i-1. 14212 -134th Dr. SE. Snoho.**		
		2i-2. 14212 -134th Dr. SE. Snoho (Us)		
		2i-3. 13626 -134th Dr. SE. Snoho (Ds)		
		2i-4.		

X3i. Lord Hill Reservoir		**3i-1. 12918 -150th St. SE. Snoho**		
		3i-2. 14815 -127th Ave. SE. Snoho (Us)		
		3i-3. 14731 -127th Ave. SE. Snoho (Ds)		
		3i-4.		
X4i. DOC		**4i-1. 17302 170th Dr.**		
		4i-2. 17001 Tester Rd. (Us)		
		4i-3. 16744 170th Dr. SE. (Ds)		
		4i-4.		
X5i. Ingraham Reservoir		**5i-1. 13803 Ingraham Rd.**		
		5i-2. 13705 Ingraham Rd. (Us)		
		5i-3. 13930 Ingraham Rd. (Ds)		
		5i-4.		
X6i. North Hill Reservoir		**6i-1. 10805 -202nd St. SE**		
		6i-2. 20218 Pipeline Rd. (Us)		
		6i-3. 10814 -202nd St. SE (Ds)		
		6i-4.		
X7i. North Hill Pump Station		**7i-1. 20218 Pipeline Rd.**		
		7i-2. Wagner Tap (Us)		
		7i-3. North Hill Reservoir (Ds)		
		7i-4.		
X8i. Trombley Reservoir/ Reservoir 5		**8i-1. 13125 -191st Ave. Se**		
		8i-2. 13104 197th Ave. SE (Us)		
		8i-3. 13311 191st St. SE (Ds)		
		8i-4.		

Important Notes for Sample Collector:

1. Schedule a date to collect samples with the WWTP lab early in the month and early in the week.
2. Do not collect samples in a week when there is a holiday or when a key staff member is on vacation.
3. Assess the representative status of each sample site each time a sample is collected. If a sample site appears to have abnormalities the sampler should locate a substitute sample site. Circumstances that would be considered "abnormal" would include, but is not limited to be construction at the facility where the sample is located, modification of the plumbing at the sample site, or an activity where at the sample site that may have compromised the sanitary integrity of the sample faucet. Inform Water Quality Lead (WQL) the sample site may need to be changed. WQL will update the CMP if site needs to be changed.
4. Measure the free chlorine at each sample site and record measurement on the lab form.
5. Always review the lab results. Notify WQL immediately if a sample comes back unsatisfactory.

E. Routine Sample Rotation Schedule

Each month that coliform samples are collected the route is changed so that the sample collector isn't repeating the same route consecutively. The sample collector begins the route in a different section of the distribution system each month to vary the time of day a specific site is sampled from month to month.

F. Level 1 and level 2 Assessment Contact Information

Name: Jordan Ottow Water Distribution Manager 2	**Office Phone:** 360-863-4546 **After Hours Phone:** 425-239-0189
Address: 806 West Main St Monroe, WA	**Email:** jottow@monroewa.gov
Name: Scott Barr Water Distribution Manager 4	**Office Phone:** 360-863-4616 **After Hours Phone** 425-239-0189
Address: 806 West Main St Monroe, WA	**Email:** sbarr@monroewa.gov

- Must conduct a **Level 1 Assessment** within 30 days of any of the following events:
  - A failure to collect three repeat samples for each unsatisfactory routine sample
  - Two or more unsatisfactory coliform sample results are reported for the same month
- Must conduct a **Level 2 Assessment** within 30 days of any of the following events:
  - Confirmation of E.coli contamination
  - Second failure in a 12-month period to collect three repeat samples for each unsatisfactory sample
  - Second time in a 12-month period that two or more unsatisfactory coliform sample results are reported in the same month

G. E. coli Present Sample Response

Distribution System *E. coli* Response Checklist				
Background Information	**Yes**	**No**	**N/A**	**To Do List**
We inform staff members about activities within the distribution system that could affect water quality.	**X**	☐	☐	☐
We document all water main breaks, construction & repair activities, and low pressure and outage incidents.	**X**	☐	☐	☐
We can easily access and review documentation on water	**X**	☐	☐	☐

main breaks, construction & repair activities, low pressure and outage incidents.				
Our Cross-Connection Control Program is up-to-date.	X	☐	☐	☐
We test all cross-connection control devices annually as required, with easy access to the proper documentation.	X	☐	☐	☐
We routinely inspect all treatment facilities for proper operation.	X	☐	☐	☐
We have procedures in place for disinfecting and flushing the water system if it becomes necessary.	X	☐	☐	☐
We can activate an emergency intertie with an adjacent water system in an emergency.	☐	X	☐	☐
We have a map of our service area boundaries.	X	☐	☐	☐
We have consumers who may not have access to bottled or boiled water.	☐	☐	X	☐
There is a sufficient supply of bottled water immediately available to our customers who are unable to boil their water.	☐	☐	X	☐
We have identified the contact person at each day care, school, medical facility, food service, and other customers who may have difficulty responding to a Health Advisory.	☐	☐	☐	X
We have messages prepared and translated into different languages to ensure our consumers will understand them.	☐	☐	☐	X
We have the capacity to print and distribute the required number of notices in a short time period.	X	☐	☐	☐
Policy Direction	**Yes**	**No**	**N/A**	**To Do List**
We have discussed the issue of *E. coli*-present sample results with our policy makers.	☐	☐	☐	X
If we find *E. coli* in a routine distribution sample, the policy makers want to wait until repeat test results are available before issuing advice to water system customers.	☐	☐	☐	X

Distribution System *E. coli* Response Checklist				
Potential Public Notice Delivery Methods	**Yes**	**No**	**N/A**	**To Do List**
It is feasible to deliver a notice going door-to-door.	X	☐	☐	☐
We have a list of all of our customers' addresses.	X	☐	☐	☐
We have a list of customer telephone numbers or access to a Reverse 9-1-1 system.	X	☐	☐	☐
We have a list of customer email addresses.	☐	X	☐	☐
We encourage our customers to remain in contact with us using social media.	☐	☐	X	☐
We have an active website we can quickly update to include	X	☐	☐	☐

important messages.				
Our customers drive by a single location where we could post an advisory and expect everyone to see it.	☐	**X**	☐	☐
We need a news release to supplement our public notification process.	☐	**X**	☐	☐

Distribution System *E. coli* Response Plan

If we have *E. coli* in our distribution system we will immediately:

1. Call DOH.
2. Collect repeat and triggered source samples per Part D. Collect additional investigative samples as necessary
3. Put together a response team that is familiar with the distribution system.
4. Members of the response team will hand deliver DOH approved door hangers notifying the customers to not drink the water. Contact phone numbers and instructions will be included. This is to be done in the first 24 hours of discovery of the unsatisfactory sample.
5. Shut off pumps as needed.
6. Assess the area and develop a plan to isolate the affected area.
7. Check with staff to determine whether anything unusual was happening in the water system service area, especially since the previous month's samples.
8. Review new construction activities, water main breaks, and pressure outages that may have occurred during the previous month.
9. CCS should look into possible cross-connections in the specified area.
10. Water quality collector should assess sample sites.
11. Look for obvious leaks or breaks.
12. The system was effectively disinfected following any construction or repair work
13. Discuss with DOH whether to issue a Health Advisory based on the findings in the previous steps.

Reservoirs and Storage Tanks *E. coli*-Present Response Plan

If we have *E. coli* in a reservoir or storage tank we will immediately:

1. Call DOH.
2. Collect repeat and triggered source samples per Part D. Collect additional investigative samples as necessary
3. Members of the response team will hand deliver DOH approved door hangers notifying the customers to not drink the water. Contact phone numbers and instructions will be included. This is to be done in the first 24 hours of discovery of the unsatisfactory sample.
4. There are no openings that allow entry of surface water, debris, insects, etc.
5. The access hatch has an overlapping, watertight cover and a neoprene-type seal.
6. Vents are clean, directed downward, and screened (minimum 24-mesh).
7. Overflow and drain lines are protected with screens or angle-flap valves and discharge above ground. The drainpipe should not be submerged in nonpotable water.
8. There are no signs of dirt, insects, growth, sediment, or debris inside the tank
9. There are no cracks, leaks, or vegetative growth on the outside of the tank.

H. System Map

Appendix W-I

Disinfectant By-Product Monitoring Plan

THIS PAGE INTENTIONALLY BLANK

DBP Monitoring Plan
(Quarterly Schedule)

System Name:	Monroe Water System
PWSID#:	558201
Population:	20,000
Type of Source Water:	**Surface water**
Completed by:	Scott Barr
Date:	6/16/2024

Routine Monitoring Requirments

Monitoring Frequency (Routine Monitoring):	Quarterly
Number of TTHM Samples Required:	4
Number of HAA5 Samples Required:	4

See Routine Monitoring Reference tab to determine number of samples required

Reduced Monitoring Schedule

Monitoring Frequency (Reduced Monitoring):	Quarterly
Number of TTHM Samples Required:	
Number of HAA5 Samples Required:	

See Reduced Monitoring Reference tab to determine number of samples required

Monitoring Locations and Month Assigned

Monitoring Location (Name of Site)	Assigned Sampling Month			
	1st Qtr	2nd Qtr	3rd Qtr	4th Qtr
17201 136th Pl	X	X	X	X
16886 Wales St	X	X	X	X
16924 W Main St	X	X	X	X
12109 Old Snohomish Monroe Rd	X	X	X	X

Determining Compliance for TTHM and HAA5

Our system is required to monitor quarterly. Each quarter we will calculate a locational running annual average (LRAA) for TTHM and HAA5 at each monitoring location. Compliance will be achieved if the TTHM and the HAA5 LRAA at each monitoring location for the four most recent quarters is less than or equal to 0.080 mg/L for TTHM and less than or equal to 0.060 mg/l for HAA5.

Because compliance is based on a locational running annual average, the same location(s) must be used each quarter.

Operational Evaluation Level (OEL)
Calculated each quarter using the most recent 3 quarters of sample results, with Q3 being the most recent (multiplied by 2) and Q1 being the first of the 3 quarters.

$$\mathbf{OEL} = \frac{\mathbf{[Q1 + Q2 + 2\times(Q3)]}}{\mathbf{4}}$$

If the calculated OEL exceeds the MCLs for TTHM (0.080 mg/L) or HAA5 (0.060 mg/L) then the system has an OEL exceedance and is required to conduct an operational evaluation and submit a report within 90 days.

To qualify for reduced monitoring:
The TTHM LRAA must be less than or equal to 0.040 mg/L AND the HAA LRAA must be less than or equal to 0.030 mg/L at each monitoring location.

AND for systems that use surface water the source water annual average TOC level, before any treatment, must be less than or equal to 4.0 mg/L (based on routine monthly samples or reduced quarterly samples). Please note, if you are a wholesale customer, you will need to get this data from your supplying system.

Disinfectant Residual Monitoring
Chlorine residuals must be measured at the same time and place as routine or repeat coliform samples MRDL for chlorine and chloramines = 4.0 mg/l as Cl2

Determining Compliance for disinfectant residuals
Compliance is based on the running annual average (RAA) of 12 consecutive months. Daily residual measurements will / will not be included in the compliance calculations (circle one)

(Attach a distribution map with sample locations. You will need to print a hard copy for your records and make it available upon request. You do not need to submit a copy to DOH. If you need this publication in an alternate format, call (800) 525-0127. For TTY/TDD call (800) 833-6388.)

_Utility Map

with ArcGIS Web AppBuilder

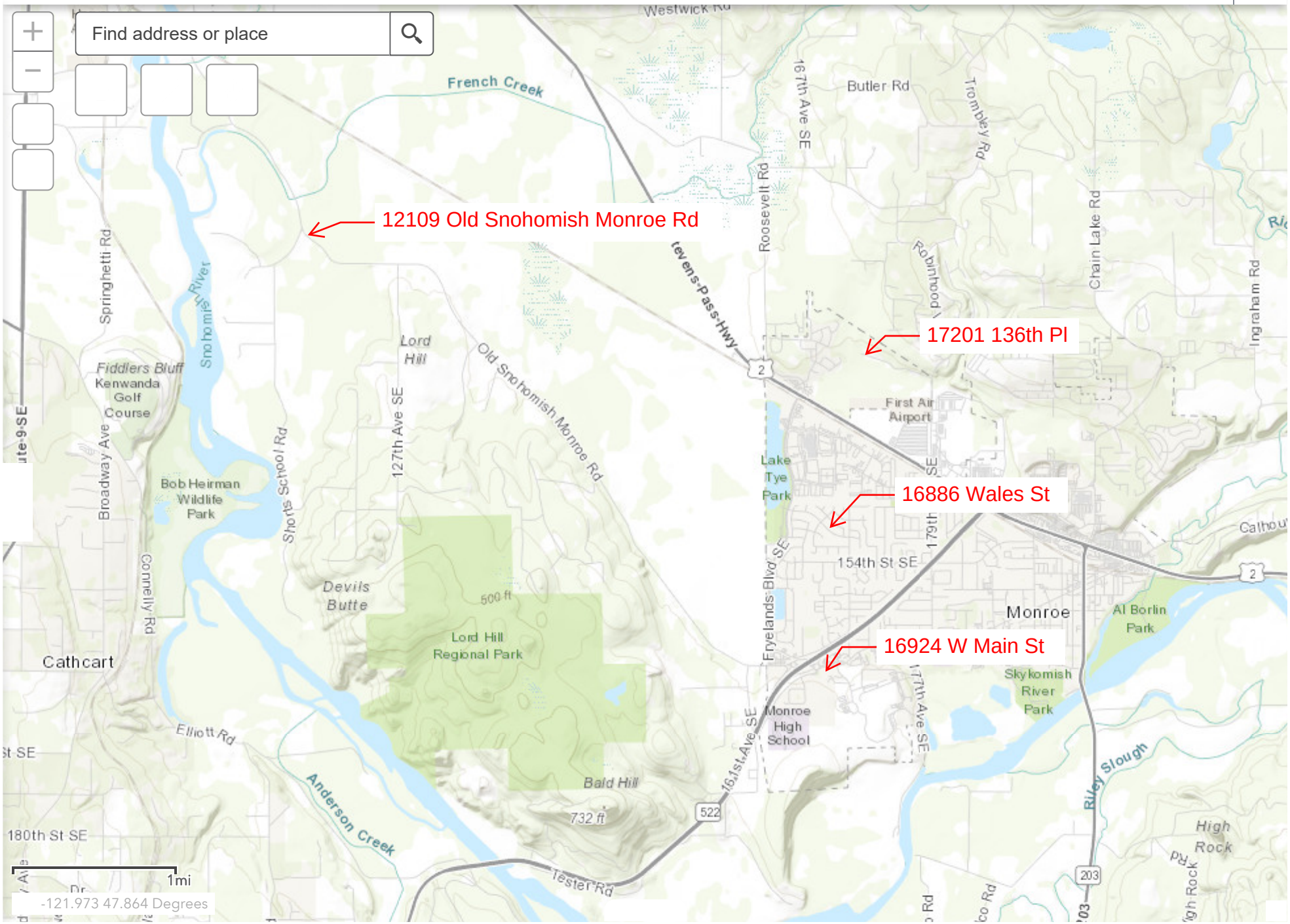

Appendix W-J

Lead and Copper Rule Compliance Monitoring Plan

THIS PAGE INTENTIONALLY BLANK

Revised Everett Regional Lead and Copper Rule Compliance Monitoring Plan

May 23, 2018

Table of Contents

Section Title *Page*

1.0 Purpose of the regional LCR monitoring program 1
2.0 Regulatory background 1
3.0 Description of the Everett water supply system 1
4.0 History of the Everett regional LCR monitoring program 2
5.0 Revised Everett Regional Monitoring Plan 3
5.1. Overview 3
5.2. Participation requirements and system eligibility 3
5.3. Approximate regional LCR monitoring schedule 4
5.4. Sample quantity assignments 5
5.5. Site selection 6
5.6. Site replacement due to participant attrition 6
5.7. Sample collection methods 7
5.8. Sample transport and storage 7
5.9. Sample analysis 7
6.0 Follow-up monitoring and investigation requirements 8
6.1. Overview 8
6.2 Initial follow-up procedures for above AL routine samples 8
6.3 Additional follow-up if repeat results are above the AL 9
6.4 Most common causes of previous high lead or copper results 10
7.0 Reporting 10
7.1 Laboratory to Everett and participant systems 10
7.2. Everett to DOH 12
7.3 Everett to participant systems 12
7.4 Participant systems to customer volunteers 13
8.0 Specific regional LCR violation compliance strategies 13
8.1. Failure by a system to collect assigned samples 13
8.2. Failure of a system to use LCR compliant sample sites 13
8.3. Regional failure to collect required number of samples 13
8.4. Exceedance of an action limit by the regional group 14
Appendices 15

1.0 Purpose of the regional monitoring program

The fundamental premise for the regional LCR monitoring program as defined by the Washington State Dept of Health Office of Drinking Water (WA DOH) is for the bulk of the consecutively connected water distribution systems that make up the Everett Water Service Area to conduct LCR compliance monitoring as a single water distribution system. Coordinated monitoring across the greater water service area is thought to provide a more accurate and comprehensive measure of the effectiveness of the corrosion treatment process that is employed at Everett's water treatment plant which serves all of the participating systems.

This 2018 revised Everett regional LCR compliance plan has been developed to bring the program up to date with the EPA guidance for regional LCR monitoring programs and also with the changes in the state and federal regulatory environment that have occurred since the original 1992 Everett consecutive systems LCR monitoring plan was developed and implemented.

2.0 Regulatory background

On June 7, 1991, EPA published a regulation to control lead and copper in drinking water. The rule replaced the previous standard for lead of 50 ppb at the entry point to the distribution system. This regulation is known as the Lead and Copper Rule (also referred to as the LCR or 1991 Rule). Lead and copper enter drinking water primarily through corrosion of plumbing materials. The rule established a maximum contaminant level goal (MCLG) of zero for lead in drinking water and a treatment technique to reduce corrosion within the distribution system.

The treatment technique for the LCR requires systems to monitor drinking water at selected customer taps. If lead concentrations exceed an action limit (AL) level of 15 ppb or copper concentrations exceed an action limit (AL) level of 1.3 ppm in more than 10% of customer taps sampled, the system must undertake a number of additional actions to control corrosion. If the AL level for lead is exceeded, the system must also inform the public about steps they should take to protect their health and may have to replace lead service lines under the system's control. Once a system demonstrates the effectiveness of its corrosion control program via more frequent monitoring, a system is allowed to reduce LCR tap sample monitoring frequency and quantity.

3.0 Description of the Everett water supply system

Everett's source is surface water supplied from the 70 square mile Sultan Basin watershed located on the western front of the Cascade Mountains 30 miles east of the City of Everett. Runoff is stored in Spada Lake Reservoir (50 billion gal max storage) which is located at the bottom of the watershed. Facilities include a

second raw water storage basin located 8 miles west at Lake Chaplain Reservoir (approx 6 billion gal max storage), a 132 MGD direct filtration treatment plant (disinfection with chlorine, coagulation, flocculation, filtration, fluoridation, and corrosion control treatment via pH adjustment with soda ash) located at the south end of Lake Chaplain Reservoir, and three 18-21 mile long large diameter water transmission pipelines connecting the treatment plant to the City of Everett. In addition to Everett, the system supplies twelve other larger WA DOH Class A water systems (1000 to 55,000 connections) and over thirty small class A systems, either via direct intertie to the transmission pipelines or by third party intertie to the distribution system of one of the direct supply systems. The total population served by the regional supply system is approximately 570,000. See Appendix 1 for a map of the greater Everett water service area.

4.0 History of the Everett regional LCR program

The initial implementation of the 1991 LCR required large systems to begin tap monitoring prior to medium and small systems. The City of Everett and its largest wholesale customer Alderwood Water District began compliance tap monitoring in the spring of 1992. Both systems exceeded the action limit for lead in the first round of monitoring.

Following the initial round of monitoring by Alderwood and Everett, the Washington State DOH approached Everett about developing a regional LCR tap monitoring program for all Class A water systems supplied by Everett. City and WA DOH staff developed a consecutive systems plan for an Everett regional group composed of all of the Class A systems supplied by Everett. The regional group collected the first round of consecutive system tap samples in the fall of 1992. The 90th percentile lead results for the samples collected in this round were just below the lead action limit at 13 µg/L. Lead service lines were found to be nonexistent in the regional service area. To further evaluate lead sources in the distribution systems, the first round of regional of monitoring also employed a fractionated sample collection method that collected incremental samples from test faucets, home piping and adjoining water mains. The results from this incremental round identified the main source of lead in the Everett service area testing locations to be lead leached from brass faucets.

Everett made adjustments to the corrosion treatment process at the treatment plant in 1993, and conducted a LCR required corrosion treatment optimization study in 1994. Following the first corrosion treatment optimization adjustment, the 90th percentile results for LCR tap sampling conducted in 1993 were 10 µg/L. Following the completion of the corrosion optimization study the City made further refinements to the corrosion treatment process. The 90th percentile lead results from further rounds of testing in 1996 and 1997 declined to 8 and 6 µg/L respectively.

In 1999, WA DOH approved optimized treatment status for the Everett system and set pH as the optimized corrosion treatment control parameter for the treatment plant. In addition, WA DOH also approved reduced monitoring for the

regional program to once every three years at a reduced quantity of sampling locations (125). Beginning with the 2000 monitoring round, the 90th percentile results for lead in the three most recent rounds of monitoring reached and have remained at 3 µg/L (five times below the action limit). The 90th percentile results for copper also reflect declines similar to lead, declining from 0.407 mg/L in 1993 to 0.068 and 0.072 mg/L in 2003 and 2006 respectively. The last two rounds of LCR monitoring (2012 and 2015) all of the samples collected were under the AL for both lead and copper.

5.0 Revised Everett Regional Sampling Plan

5.1 Overview

DOH has delegated the authority and responsibility for management of the revised regional LCR monitoring plan to the City of Everett, Public Works Department. Along with coordinating each round of tap monitoring conducted under this plan and reporting the results to the participant systems and to WA DOH ODW, Everett staff will also be responsible for determining system eligibility and participation in the monitoring program. Each participating system will be responsible for collecting samples at LCR compliant monitoring locations by the deadlines described in the regional plan. Any participating systems that obtain initial individual tap sample results that are higher than the lead or copper action limits are obligated to conduct follow up monitoring and investigation at the above-action-limit sites to determine the representativeness of the initial tap sample results and to evaluate the cause of the high values. If a system obtains follow-up results over the action limits that cannot be explained, the system will be removed from the regional monitoring plan and referred to DOH for further monitoring or investigation to determine the extent and cause of the unexplained high follow-up monitoring result(s). Once a participating system has satisfied WA DOH as to the cause(s) of their previously unexplained high sample results, or corrected any problems that were determined to cause the high results, the system will be allowed to return to the regional monitoring program. Any system that fails to meet its obligations to or agreements with the regional monitoring program will be ineligible for future participation in the program.

5.2 Participation Requirements and System Eligibility

5.2.1. Participation Agreement

Prior to the start of each round of tap monitoring, a regional LCR monitoring program participant agreement will be mailed to each eligible water system. An official representative of the water system must sign the agreement and return it to the Everett regional LCR coordinator by the deadline specified at the time the agreements are sent out. See Appendix 2 for a general copy of the agreement.

5.2.2. Conditions of Participation

- Participant systems agree to conduct monitoring as directed by Everett staff and as detailed in this plan.
- Systems agree to abide by decisions made by Everett staff as to their systems eligibility to participate.
- Systems are responsible for keeping Everett LCR coordination staff informed and updated on the identity of their key contact(s) for LCR monitoring, and their contact information.
- Participating systems are responsible for keeping themselves informed as to their systems specific requirements and responsibilities under the plan and the LCR regulations.
- Whenever one or more of their initial monitoring sample results are higher than the action limit values for lead and copper, systems agree to conduct follow up monitoring and report the results to Everett and DOH ODW according to the regional plan.

5.2.3. Certification of separation by multiple source systems

At the start of each monitoring round water systems that supply water from other sources in addition to water from the Everett system must also certify in writing that:

- The system will only collect samples for the Everett regional LCR program from areas of their system that exclusively receive Everett water.
- That the area of the distribution system from which regional samples are collected has been hydraulically isolated from the system's other water sources for at least one year prior to the start of sample collection for the monitoring round.

The certification submittal must also include:

- An estimate of the population served with Everett water.
- A water distribution system map of the service area that indicates the location of the source water isolation valves and the locations of the Everett regional LCR sampling sites.

5.2.4. Prior failure to participate

Several small Class A water systems served by Everett are ineligible to participate in the regional program because they failed to deliver their assigned sample(s) during past monitoring rounds. These systems will remain ineligible to participate under this revised plan. These systems should consult with their DOH regional engineer to determine their LCR monitoring requirements.

5.3 Approximate LCR regional plan monitoring schedule

The following is an approximate schedule that will be followed during years in which tap monitoring is required:

- March 1st (or the first business day in March) Everett LCR coordination staff will mail sampling program agreements and notices to the water system LCR contacts.
- April 15th. Everett will conduct an optional coordination meeting for the participating systems. The meeting will cover the schedule, sampling procedures, reporting deadlines, etc.
- May 1st. Participating systems will be required to return their notice of intent to participate and a copy of the participation agreement signed by the system official to the Everett LCR coordination staff no later than May 1st. Multiple source systems must also provide their certification of separation at this time.
- July 15th. Everett will make sampling kits and sample collection information forms available for pickup by participating systems (approximately two weeks prior to the start of routine tap monitoring).
- July 31st. Regional program systems must pick up their sample kit(s) by this date.
- August 1st through September 30thth. Systems must collect tap samples and water quality parameters samples between these dates. Samples will be analyzed by the Everett Environmental Laboratory (EEL) or by a contract lab selected by the EEL if the laboratory is unable to conduct the required sample analysis.

  Note: water quality parameters monitoring will also be conducted in the Everett, Edmonds, Silver Lake, and Alderwood systems during this time period.
- August 15th to October 30th. Follow up monitoring by systems which obtained sample results higher than the action limits for copper or lead during the initial round of tap monitoring must be conducted. The analyzing laboratory (usually EEL) must analyze the samples on a "quick-turn-around" basis. Systems that obtain initial follow up results that are greater than the action limits for lead or copper must also contact the customers from whom those results were obtained and provide public education on the potential health impacts. When possible, the system will collect the follow up sample(s) within five working days of receipt of the results and prior to September 30th.
- September 30th (or later). Systems that obtain sample results above the action limits from follow-up samples will be removed from the program and referred to DOH for guidance on conducting additional more intensive follow up monitoring within their service area.

5.4 Sample quantity assignments

5.4.1 Routine lead and copper tap samples

WA DOH has defined 100 samples as the minimum quantity of lead and copper tap samples required for each round of Everett regional tap monitoring (this quantity is twice the number required by the LCR regulations for an individual system of population 100,000 or greater). To ensure the minimum quantity requirement is met, 105 to 115 samples will be targeted for collection.

Everett coordinating staff will apportion the sample collection assignments to the participant systems. Small systems will be assigned a single sample. With the exception of the three multiple source systems, sample quantity assignments for all of the medium and large system sample quantities will be based on the fraction of the total regional system population that each system's total service population comprises. The system population used for the apportioning calculation will be that reported on the WA DOH Sentry website, at the time the Everett staff is planning the upcoming round of sample collection. Sample quantity assignments for the three multiple source system's will be based on the population served with Everett water as reported on their regional LCR system separation certificate for the current round of monitoring. The fraction or percentage of the total population for each medium to large system will be multiplied by the number of samples left to assign after each small system has been assigned a sample.

See Appendix 3 for an example of a system participant and sample apportionment list.

5.4.2. Water quality parameters (WQP) samples

WQP samples (temperature, pH, conductivity and alkalinity) will be collected from established representative sites in the Everett, Alderwood, Silver Lake, and Edmonds water distribution systems. To minimize variability due to sample collection and analysis errors and bias, all WQP samples will be collected and analyzed by a water quality technician or analyst from the City of Everett EMC group. The technician/analyst will coordinate with the respective staffs of Alderwood and Edmonds to collect the WQP samples required from those two systems.

See Appendix 4 for an example WQP site list from the 2018 sample round.

5.5. Site selection

Each participating system is responsible for selection of sample sites that meet the selection criteria laid out in the LCR regulations as described in [40CFR141.86(a)].

5.6. Site replacement due to volunteer customer participant attrition

The EPA LCR monitoring guidance and the federal regulations "encourage" the use of the same sample sites during each round of

monitoring. However, due to the long term and permanent nature of the monitoring requirements combined with the use of volunteer customer taps, many of the sites that were used originally have eventually become unavailable for monitoring. Many of the original home owners have moved, died or declined further participation in the program. When new sample sites must be added, each system participating in the regional LCR program is responsible for obtaining replacement sites that meet the LCR site criteria in [40CFR141.86(a)].

Each participating system is also responsible for notifying DOH of any monitoring location changes they make within their system.

5.7. Sample collection methods

Each system must collect samples according to the requirements of the LCR regulations [40CFR141.86(b)]. A sample collection instruction form will be provided with each lead and copper sample container. Systems are responsible for ensuring their customer volunteers follow the monitoring instructions and that they fill out the sample information form and sign the statement located on bottom of the form. The statement certifies the customer followed the sample collection procedures. As required by recent EPA guidance, customer sampler instructions will include an instruction to leave tap screens in place during sample tap set up and sample collection.

See Appendix 5 for a copy of the sampling procedure instructions.

5.8. Sample transport and storage

Samples should be stored in insulated coolers with cold packs and delivered to the laboratory the same day that they are collected. Samples that are held for more than 72 hours prior to delivery to the laboratory will not be accepted. Any samples rejected for excess hold time must be recollected from the same location as the original.

5.9. Sample analysis

5.9.1 Analytical Laboratory.

Lead, copper, alkalinity, and conductivity samples will be analyzed at the Everett Environmental Laboratory (EEL) using methods approved for analysis for the LCR. The laboratory will follow the LCR sample preservation and holding requirements. Accreditation with the Washington State Dept of Ecology (DOE) laboratory program for the required methods will be maintained during all LCR sample analysis.

5.9.2. Alternate laboratory requirements.

If the EEL is unavailable to conduct sample analysis, the EEL staff will select a third party contract laboratory that is DOE accredited to

analyze the LCR regional program lead and copper samples. The Everett regional LCR coordinator will be consulted before any substitute contract laboratory is selected. The EEL must verify that the contactor can meet the same method requirements, detection limits, and reporting limits that the EEL provides.

5.9.3. Field analysis.

pH and temperature measurements for water quality parameters (WQP) monitoring will be conducted by Everett field staff using approved methods.

6.0 Follow up monitoring and investigation requirements

6.1 Overview

Systems participating in the regional monitoring program are required to resample any location where the routine results are greater than the LCR action limits for lead or copper (15 ug/L for lead and 1.3 mg/L for copper) and to investigate the probable causes for the high routine tap sample result(s). Each system that obtains high routine sample results will conduct the follow-up monitoring as soon as possible, but not more than five working days after, notification of the results by the lab or the Everett LCR coordinator. Initial follow-up procedures for high routine sample results are detailed in 6.2

Systems that obtain high repeat results (greater than the action limits) from follow-up monitoring will be temporarily removed from the regional program and referred to WA DOH for guidance on conducting additional intensive follow-up monitoring and investigation to determine if their system has a system specific water corrosion problem.

6.2. Initial follow-up procedures for routine samples above the AL

6.2.1. Each system will interview the customer volunteer to verify whether or not the sample set-up and collection procedure was followed during collection of the original routine tap sample. The system will also attempt to determine if the customer has made any plumbing changes, particularly faucet replacements, in the year prior to sample collection.

6.2.2. Each system will provide additional information about lead in tap water to any customer volunteer (such as Everett's "*Concerned About Lead?*" brochure) whose tap results are greater than the action limits for lead and copper.

6.2.3. Each system that obtains results above the action limits for lead or copper will arrange to resample those locations within five working days of their receipt of the high initial results. Systems will use the standard LCR regional tap monitoring procedure (Appendix 5) to collect the follow-up sample(s) and will not make any modifications to the

procedure. The same taps that were used to collect the original routine sample will be used to collect the investigative resample(s).

6.2.4. Each system should request the laboratory to analyze the samples and report the results on a short turn around basis.

6.2.5. Each system conducting initial follow up for lead or copper at a tap in their system must also collect water quality parameters (WQP) samples from the test tap and at least five other locations within the system. Each of the WQP samples will be analyzed for pH, alkalinity, conductivity, and temperature.

6.2.6. Within five working days of receiving the analytical results from the laboratory, any system that conducts follow up or investigation on initial sample results above the action limits will report the results and any findings of the follow-up via email, fax, or telephone to the WA DOH engineer and to the Everett LCR regional coordinator.

6.3. Requirements for additional follow-up if repeat results are above the Action Limit (AL)

6.3.1. Intensive follow-up monitoring will not be required if the following conditions are met:

- The other routine sample(s) that were collected from the water system are below the LCR action limits for lead and copper;
- The results of the single repeat follow-up sample(s) are below the action limits;
- The probable cause of each individual high result can be reasonably identified (i.e. new faucet installed, customer held water in plumbing longer than instructed, etc);
- The results of the follow-up WQP samples from the system are similar to the expected values for pH, alkalinity, and temperature.

6.3.2. Follow-up sample results with unidentified causes

If a follow-up repeat sample is above an action limit and the cause of the high result cannot be reasonably identified, the following actions will be taken:

- The system will be temporarily removed from the regional tap monitoring program.
- The system will consult with WA DOH regarding conduct of additional lead/copper tap monitoring, system WQP monitoring, and any additional investigation into the cause(s) of the high result(s) to determine if a corrosion problem exists within the system.
- Systems that complete investigation of their unexplained high results to the satisfaction of the DOH engineer and demonstrate

that they do not have a system specific corrosion problem will be eligible to return to the regional monitoring program for future LCR required tap monitoring.

- Systems will be reinstated to the regional monitoring program following WA DOH approval and notification to the Everett LCR staff of such change in LCR monitoring status.

6.3.3. Failure to conduct follow-up monitoring

Failure by a system to conduct follow-up monitoring will result in permanent expulsion from the regional LCR tap monitoring program. The system will return to individual system monitoring status and will be referred to WA DOH for guidance, citation, or enforcement action.

6.4. Most common causes of high lead or copper results

The following are some of the most common causes for routine results over the action limits for lead that have been identified during past rounds of lead and copper tap monitoring. These causes should be considered when investigating initial tap monitoring results over the action limits for lead or copper:

6.4.1. Customer volunteer installed a new brass faucet one year or less prior to collecting their LCR tap sample.

6.4.2. Customer volunteer used lead containing materials to change or renovate the plumbing that supplies the test tap (New solder will leach at higher rates than older solder that has been oxidized and passivated).

6.4.3. Customer used the plumbing system to ground the household electrical system or a household appliance.

7.0 Reporting

7.1. Laboratory to Everett LCR coordinator and participant systems

7.1.1. Preliminary routine tap monitoring informal reports

The Everett LCR coordinator will arrange with the laboratory to obtain results of any routine tap sample results that are over the action limits as soon as possible.

The laboratory will report the results of any routine tap sample results that are greater than 15 ug/L for lead or 1.3 mg/L for copper to the system that collected the sample(s) and to the Everett LCR coordinating staff.

The preliminary reports on any high results must include the following information:

- System name

- Sample site street address
- Laboratory sample ID
- Lead and copper results for each sample.

7.1.2. Final comprehensive regional and individual system reports.

The laboratory will provide a comprehensive electronic report of results in the required WA DOH format to the Everett regional LCR coordinator by November 1st of the year in which monitoring occurred. Along with the compiled regional report, the report file workbook must include separate reports (one per tab) of the results for each individual system. The system name, sample site street address, laboratory sample ID, and the results for each sample must be reported on the compiled regional report sent to WA DOH. The Everett regional LCR plan coordinator will review the final report and send it to WA DOH and to each participating system.

See Appendix 6 for an example report excerpted from the final DOH report from the 2006 round of monitoring.

(*Note: Appendix 6 contains a copy of the 2006 comprehensive report and an example report of one individual system. Future reports will be modified to include the system name, PWSID #, sample location address and lab sample ID number for each sample.*)

7.1.3. Follow-up monitoring results reports

The laboratory will report the results of any follow-up monitoring conducted at LCR tap sample sites for lead or copper to the contact person for the system that collected the samples and to the Everett LCR coordinator. At a maximum, the sample results must be reported within 30 days of their receipt at the laboratory. Within five days of receiving the report, each water system must send their follow-up lead and copper results on the report to the DOH engineer and to the Everett LCR coordinator.

The Everett LCR coordinator is responsible for consulting with DOH to determine which follow-up samples must be included on the final LCR report and which (if any) will be invalidated and removed from the report. The LCR coordinator will also keep the lab informed as to which samples must be included on the final report.

7.1.4. Intensive monitoring reports after follow-up sample collection and analysis.

Systems that are required by WA DOH to undertake further investigation and monitoring within their system after obtaining repeat unexplained high results will coordinate directly with the laboratory and WA DOH on how and where to report their intensive follow-up results.

7.2. Everett to WA DOH

7.2.1. Final LCR report

Everett LCR coordination staff will email copies of the final tap sample report to the WA DOH regional engineer. If directed to by the WA DOH regional engineer, Everett will also email the report to other WA DOH staff. The final report is due to WA DOH not later than ten days after the year in which monitoring is conducted (January 10th of the year following the monitoring year).

Along with the lead and copper results, the final report must include the following information for each sample:

- the laboratory sample ID
- the address of the sampling location
- the name of the water system where the sample was collected
- the water system ID the system where the sample was collected

Except when invalidated by WA DOH, all sample results obtained from initial follow-up monitoring will be listed on the final compiled Everett regional LCR report and included in the 90th percentile calculation for the regional program. This would include repeat follow-up samples collected after September 30th.

7.2.2. Follow up tap sample results reports.

When follow-up investigative monitoring is conducted by a participant system, the water system will report the results of the monitoring to the regional LCR coordinator and the WA DOH engineer within five working days of receiving the report(s). The WA DOH engineer or other WA DOH staff will inform the Everett coordinator whether the sample results should be invalidated or included on the final LCR regional monitoring report to DOH. Except when invalidated by DOH, all sample results obtained from repeat follow-up monitoring will be included in the final Everett regional LCR report and used to calculate the 90th percentile for the regional group.

7.3. Everett to water system participants

7.3.1. The Everett regional LCR program coordinator will send copies of the any high individual system preliminary results as soon as possible, but not more than five days after receipt of the results from the laboratory.

7.3.2. Everett will also send copies of the final comprehensive regional report to each system at the same time it provides the report to DOH.

7.4. Water systems to customer volunteers

7.4.1. Reports to customer volunteers

Participating water systems are required by WA DOH to report their individual lead and copper sample results to each of their customer volunteers. With the exception of results that are higher than the action limits for lead or copper, each water system will determine the timing and method of reporting to its customer volunteers.

7.4.2. Reports of high results to customer volunteers

Although the method of notification will be determined by each system, the timing of notification of high individual results must follow the schedule requirements of the plan (within five days of receipt of the high result(s)).

8.0 Specific regional LCR violation compliance strategies

Because regional programs are not specifically described in detail in the federal or state LCR regulations, EPA and WA DOH require that the responses to certain potential violation or compliance scenarios be described and defined for the regional plan.

8.1. Failure of a participant water system to collect assigned samples

Water systems that fail to collect their assigned samples will be expelled from the regional program, returned to individual system status for LCR compliance, and referred to WA DOH for guidance, citation, or enforcement action.

8.2. Failure to collect samples from LCR compliant sampling locations

Systems that fail to collect their assigned samples from sample sites that meet the criteria described in the LCR regulation [40CFR141.86(a)] will be expelled from the regional program, returned to individual system status for LCR compliance monitoring, and referred to WA DOH for guidance, citation, or enforcement action.

8.3. Failure of regional group to collect the minimum number of required samples

Although the LCR regulations do not specify what follow up action would be required for a system that fails to collect the required number of samples, failure of the regional group to collect the sample minimum quantity set by WA DOH for each monitoring round of the regional monitoring program would be considered a monitoring violation for the purposes of this plan.

If the regional group fails to collect the required minimum, the participating systems would resume standard monitoring (once every 6 months) as a regional group. Resumption of reduced monitoring would begin again when approved by WA DOH, or when the regional program results meet the

criteria set out in 141.86(d)(4)(v) [90th percentile result for lead is ≤ 0.005 mg/L and the 90th percentile result for copper is ≤ 0.65 mg/L] in two consecutive six month monitoring periods.

8.4. Exceedence of an Action Limit (AL) by the regional group

If the 90th percentile results for lead or copper samples collected for the regional sample program exceed either action limit, the regional sampling program must resume monitoring every six months at the required minimum 100 sites. If the monitoring results from the two rounds of every-six-months monitoring are below the action limits, but above 0.005 mg/L for lead and 0.065 mg/l for copper, WA DOH would decide when to allow reduction of monitoring to an annual or triennial frequency. If the results for two consecutive six month or two annual monitoring rounds are less than or equal to 0.005 mg/L and 0.65 mg/L respectively [see 40CFR141.86(d)(v)], the regional systems would be able to reduce monitoring to triennial without further WA DOH approval. During increased monitoring at both six month and annual intervals, WQP monitoring will also be increased from one set of 30 per round to two sets of 30 WQP samples per round. When the program qualifies to resume reduced triennial monitoring, the WQP sample frequency would also be reduced to a single set of samples for each round.

Appendices

Appendix 1. Map of the Everett Water Service Area 16

Appendix 2. Copy of system participation agreement with Everett.....17

Appendix 3. Example of sample apportionment list.....19

Appendix 4. WQP site list.....20

Appendix 5. Copy of sample collection procedures.....21

Appendix 6. Example final regional and individual system reports.....24

Appendix 7. Everett and DOH contact and plan update information 29

_Utility Map

with ArcGIS Web AppBuilder

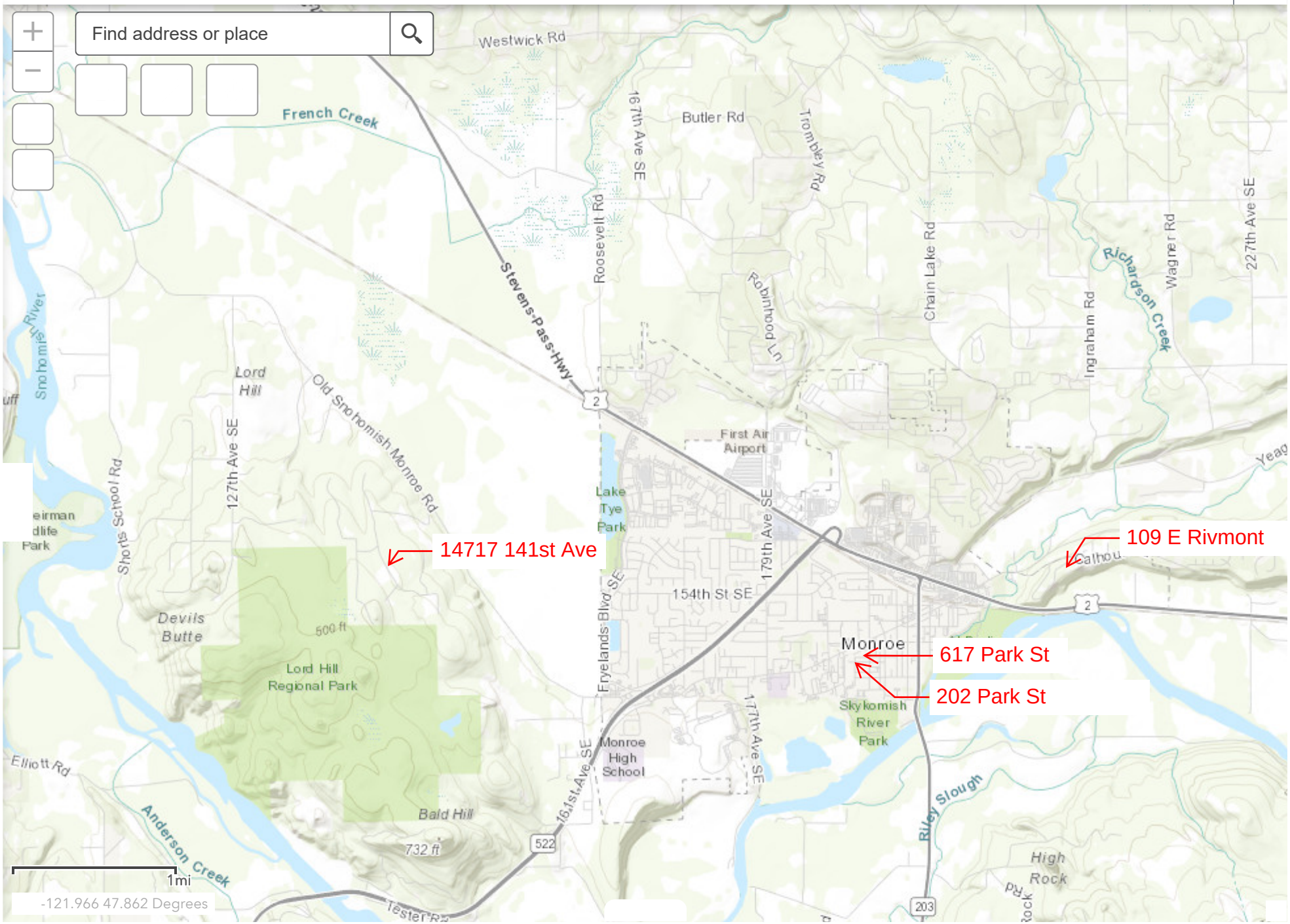

Appendix W-K

Emergency Response Plan Excerpt

THIS PAGE INTENTIONALLY BLANK

Table of Contents

I. **Introduction** 1

A. Purpose *1*

B. Goals *1*

C. *Requirement* *1*

D. Access Control *2*

E. Plan Overview *2*

II. **General Emergency Planning information** 4

A. Planning Partnerships *4*

B. Mutual aid/Supply agreements *5*

C. *Relationship Between ERP and Other Plans* *5*

III. **Emergency Response Plan - Core Elements** 7

A. System Specific Information *7*

1. PWS IDs and System Owners 7
2. Administrative Contact Information 7
3. Population Served and Service Connections 7
4. General Description of the Water System 8
5. Critical System Components 9

B. Roles and Responsibilities *10*

Refer to City of Monroe Comprehensive Emergency Management Plan

C. *Response Capability Identified in the Water System VA* *10*

D. Communication Procedures *12*

1. Notification Order, Level I, II, III 12
2. Internal Notification List 16
3. External Notification List 17
4. Critical Customers Notification List 19
5. Contact Information for Firefighting Water Alternate Sources 20
6. Contact Information for Bulk and Bottled Water Suppliers 21
7. Public/ Media Notification 21

E. Personnel Safety *22*

1. Facility Protective Actions 22
2. Personnel Accountability 23
3. Off-site Protective Actions 23
4. First Aid and Emergency Medical Treatment 23

F. Protective Action Protocols *24*

1. Sheltering-in-Place Protocol 24
2. Evacuation Procedures 25
3. Evacuee Assembly Areas 26
4. Shelter Locations 27

G. *Identification of Alternate Water Sources* *28*

1. Alternate Raw Water Sources 28
2. Interconnects and Agreements with Other Utilities 28
3. Water Sources for Short-Term Outages 28
4. Amount of Water Needed for Various Durations 28

H. Equipment and Chemical Supplies 29

1. Facility Emergency Equipment List 29
2. Personnel Protective and Other Emergency Equipment 40
3. Telephone Equipment 44
4. VHF Radio Communications 44

I. Property Protection 44

J. Water sampling and monitoring 45

IV. Decision Process and ERP Activation 46

A. Threat Warning 46

B. ERP Activation 47

C. Emergency Operations Center (EOC) activation 48

1. EOC Activation 48
2. COMPREHENSIVE Emergency MANAGEMENT PLAN ACTIVATION 49

V. Action Plans (APs) 50

A. Initial Response to Terrorist Threats and Actual Incidents 50

B. Man-Made Threats Documented in the Vulnerability Analysis 51

C. Natural Disasters 52

VI. Emergency Plan Approval, Update, Training, and Exercises 53

A. Plan Review and Approval 53

1. Monroe Approval Authority 53

B. Practice and Update Schedule 53

1. Schedule and Responsibility for Training and Exercises 53
2. Schedule for ERP Review and Update 53

C. Assessment of ERP Effectiveness 54

D. Training, Exercises, and Drills 54

VII. References and Links 56

VIII. Appendices 58

A. Procedures and Plans 58

Appendix 1A- Press Release BOIL WATER ALERT - Water Distribution System Contaminated with Known Contaminant 59

Appendix 1B - Press Release DO NOT DRINK - Unknown Contaminant Has Contaminated Drinking Water Supply 62

Appendix 1C - Press Release DO NOT DRINK - Utility Investigates Contamination Threat Monitors Situation 65
Appendix 1D - Press Release DO NOT DRINK - Utility Receives Contamination Threat, Shuts Down Water Distribution System 67
Appendix 1E - Press Release WATER PIPELINE DAMAGED -Areas Without Water 69
Appendix 1F - Press Release DO NOT DRINK - Known Contaminant Has Contaminated Drinking Water Supply 70
Appendix 2 - Threat Evaluation Worksheet 75
Appendix 3 - Security Incident Report Form 79
Appendix 4 - Witness Account Report Form 82
Appendix 5 - Phone Threat Report Form 85
Appendix 6 - Written Threat Report Form 89
Appendix 7 - Water Quality/ Consumer Complaint Report Form 91
Appendix 8 - Public Health Information Report Form 93
Appendix 9 - Suspect Description Form 96
Appendix 10 - Maintaining Crime Scene Integrity 98
Appendix 11 - IT Incident Response and Reporting Checklist 100
Appendix 12 - Telephone Bomb Threat Checklist 103
Appendix 13 - ERP Certification Form 105

B. Action Plans 107

1. AP 1A - Threat of or Actual Contamination to Water System POSSIBLE STAGE 107
2. AP 1B - Threat of or Actual Contamination to Water System CREDIBLE STAGE 111
3. AP 1C - Contamination to Water System CONFIRMED STAGE 113
4. AP 2 - Structural Damage from Explosive Device 117
5. AP 80 - Natural Event - Earthquake 120
6. AP 9 - Water Supply Interruption 124
7. AP 10A- Bomb Threat (Telephone/In Person) 129
8. AP 1OB - Bomb Threat (Suspicious Package/ Letter) 133
9. AP 10C - Bomb Threat (Written Threat Received) 138

Appendix 4

Certification of Completion of an Emergency Response Plan

I. INTRODUCTION

This section presents the purpose, goals, requirements, access control, and plan overview of the Emergency Response Plan, ERP, for the City of Monroe. *Note that the ERPActivation process is described in Section IV.*

A. PURPOSE

The purpose of this Emergency Response Plan (ERP), is to provide Monroe with a standardized response and recovery protocol to prevent, minimize, and mitigate injury and damage resulting from emergencies or disasters of man-made or natural origin.

The ERP also describes how Monroe will respond to potential threats or actual terrorist scenarios identified in the vulnerability assessment (VA), as well as additional emergency response situations. Included in this ERP are specific Action Plans APs that will be utilized to respond to events and incidents.

B. GOALS

The goals of this Emergency Response Plan (ERP) are to:

- Be able to identify an emergency quick and initiate timely and effective response plan.
- Ensure adequate water storage and supply for fire suppression.
- Be able to notify local, state, and federal agencies quickly so they can assist in the response, if necessary.
- Protect public health by quickly being able to determine whether the water is unsafe to drink or use, notify customers of the situation immediately and effectively, and advise them of appropriate protective action.
- Quickly respond and repair damages to minimize system down time.
- Provide emergency public information concerning customer service.

C. REQUIREMENT

This ERP has been designed to comply with Section 1433(b) of the Safe Drinking Water Act as amended by the Public Health Security and Bioterrorism Preparedness and Response Act of 2002 (Public Law 107-188, Title IV - Drinking Water Security and Safety).

Monroe has provided the required certification to the EPA that this emergency response plan incorporates the results of the vulnerability assessment completed for the system and includes plans, procedures, and identification of equipment that can be implemented or utilized in the event of a terrorist attack on the water system.
Monroe will maintain a copy of the ERP for five years after submission of the EPA

certification, as required by the Bioterrorism Act.

Guidance from the following EPA guidance documents is incorporated in this ERP.

- "Guidance for Water Utility Response, Recovery & Remediation Actions For Man-Made And/ Or Technological Emergencies" (EPA 810-R-02-001).
- "Large Water System Emergency Response Plan Outline: Guidance to Assist Community Water Systems in Complying with the Public Health Security and Bioterrorism Preparedness and Response Act of 2002" (EPA 810-F-03-007, July 2003).
- "Response Protocol Toolbox: Planning for and Responding to Drinking Water Contamination Threats and Incidents" (EPA-817-D-03-001 to 007, Interim Final - December 2003).
- "Small and Medium Water System Emergency Response Plan Guidance to Assist Community Water Systems in Complying with the Public Health Security and Bioterrorism Preparedness and Response Act of 2002".

D. ACCESS CONTROL

Because of the sensitive nature of the information contained in this ERP, an access control protocol has been established under the direction of the City of Monroe's Emergency Management Coordinator. Distribution of the ERP is limited to those individuals directly involved in Monroe's emergency planning and response activities. The ERP copies are numbered prior to distribution, and recipients are required to sign and date a statement that includes their ERP number and their agreement not to reproduce the ERP without permission from the Emergency Management Coordinator. A secure copy of the ERP is maintained in an off-premises location, known to the Emergency Management Coordinator, if the utility's copies cannot beaccessed.

E. PLAN OVERVIEW

This ERP is organized into 8 sections as described below:

Section 1: Introduction: Describes the purpose, goals, regulatory requirements, access control protocol and overall organization of the ERP.

Section 2: General Emergency Planning Information: Describes Monroe's emergency planning partnerships, general emergency response policies, procedures and documents, and summarizes the scenarios from the VA that are addressed in the ERP.

Section 3: Emergency Response Plan - Core Elements: Provides specific information about Monroe's water system, identifies alternate water sources, presents emergency response chain-of-command information, and describes Monroe's communication procedures, personnel safety provisions, critical equipment sources, property protection procedures, training programs, and ERP assessment protocol.

Section 4: Decision Process and ERP Activation: How threats may be received into the utility as well as what steps to take in order to activate the emergency response procedures and or the emergency operations center are discussed in this section.

Section 5: Action Plans: This section initiates action in response to an incident from which point specific Action Plans in Section VIII.B can be utilized. Site specific threats to Monroe that have been categorized as high risk in the vulnerability assessment, natural disasters, and significant events are summarized here.

Section 6: Emergency Plan Approval, Update, Training, and Exercises: Describes the ERP review and approval process and provides a plan for ERP updates and emergency response training program management.

Section 7: References and Links: Provides references and web links to additional emergency planning information for water utilities.

Section 8: Appendices - Contains specific protocols and plans as well as the APs that will be used.

Appendix W-L

Drought Response Plan

THIS PAGE INTENTIONALLY BLANK

CITY OF EVERETT
2001 DROUGHT RESPONSE PLAN
(5-17-01)
(Updated 3-14-05)
(Proposed changes 7-22-15 REVISED)

OBJECTIVE

The Drought Response Plan (DRP) establishes procedures for managing water supply and demand during periods of weather-related shortages. This will help maintain essential public health and safety services, and minimize adverse impacts on the local economy, the environment, and the lifestyle of our residents.

OVERVIEW

Droughts are natural occurring but unpredictable weather events of varying frequency, duration and severity. In the Everett Water Service Area (EWSA), unusual weather events can cause shortages by affecting the annual refill and draw-down of the Spada Reservoir. This can occur in one or more of the following ways:

- A dry fall and/or winter can disrupt the refill cycle which normally replenishes the Spada Reservoir.
- A less than normal winter snowpack can limit the volume of flows from snowmelt in the spring to refill Spada Reservoir.
- Unusually warm and dry spring weather can cause an early melting of the snowpack and an early filling and draw-down of Spada Reservoir.
- Unusually warm and dry summer weather can significantly increase peak summer season demands and the draw-down of Spada Reservoir.

The DRP identifies the range of demand reduction actions that are available and defines the mechanism(s) by which decisions will be made during a drought event. Since each drought situation has unique characteristics, the DRP cannot address all scenarios, or all of the supply and demand management actions that might be appropriate to a given situation. As a result, the DRP is a general framework of actions that will be tailored to meet the specific needs of drought-related supply situation.

In addition to meeting the needs of the City and its wholesale water customers, the DRP is designed to achieve three goals. First, the DRP ensures that an adequate quantity of high quality water is maintained throughout a drought event. Second, the DRP ensures that adequate instream flows are maintained in the Sultan River for fish and wildlife habitat. Third, where feasible, the DRP maintains adequate storage for the

generation of hydroelectric power. While there is little latitude with the first two goals, the third may be suspended depending on the severity of a drought event.

DATA NEEDS

The DRP provides a blueprint for managing a drought situation to forestall a worsening drought-related supply condition. For the DRP to be effective, it is critical to establish a channel of clear, timely, and specific information on the supply conditions early in the process. At a minimum, this information should include:

- Regular updates on the level of Spada Reservoir
- Weather and precipitation forecasts from the Climate Prediction Center and Northwest River Forecast Center.
- Water demand forecasts identifying normal and high consumption levels and projected consumption patterns based on historical data for previous drought conditions.

COORDINATION

The City of Everett water supply system provides water to the majority of Snohomish County through contracts with wholesale water customers, or purveyors. Given this relationship, drought management actions must be implemented throughout the EWSA to be effective. Regionally consistent actions are important for a number of reasons:

- A unified message and approach is easier to communicate to the public and easier for the public to understand.
- Public support and cooperation is likely to be higher if drought management actions are equitable throughout the EWS.
- It is easier to forecast and manage demand if drought management actions are consistent throughout the EWSA.

DRP STAGES

Data from other water utilities that have faced drought situations indicates that customers prefer the opportunity to meet targeted demand reductions through voluntary actions before mandatory restrictions are put in place. As a result, the DRP provides a four-stage approach to dealing with a drought event. Each stage provides an increasingly aggressive set of actions that will be implemented as drought conditions become more severe.

The four stages of the DRP include a variety of communications, internal operating adjustments, and supply and demand management strategies. These stages are characterized as follows:

- Advisory Stage – The public is informed that a water shortage may occur and is encouraged to use water wisely.
- Voluntary Stage – This stage relies on voluntary cooperation to meet demand-reduction goals. During this stage, the City and its purveyors will implement supply-side actions and recommend voluntary actions for their retail customers.
- Mandatory Stage – During this stage, the City and its purveyors will implement more aggressive supply-side actions and will limit or prohibit certain retail water use activities.
- Emergency Stage – If supply conditions worsen and the mandatory stage does not meet the required demand reduction, this stage will establish emergency restrictions, which may include rate surcharges.

Recommendations for implementing the last three stages of the DRP will be made to the City's Public Works Director by a Drought Advisory Committee which will be formed at the direction of the Public Works Director. The Drought Advisory Committee will be composed of:

- Two (2) representatives from the City's Public Works Department,
- One (1) representative from the City's Parks Department,
- One (1) representative from the City's Facilities Department,
- One (1) representative from the City's Administration Group,
- One (1) representative from the Snohomish County PUD and,
- Two (2) representatives from the Everett Water Utilities Committee (EWUC). This should include one from Alderwood, the largest wholesale water customer.

STAGE 1 – ADVISORY

The Advisory Stage will be triggered by the City's Public Works Director, after consultation with the representatives from EWUC and SnoPUD, and water supply experts, upon determination it is necessary as a precautionary measure for maintaining a reliable water supply. This determination should be based on the following conditions and professional discretion.

A. Both of the following two conditions exist after Jan. 1 and prior to April 1:

- Spada Reservoir storage is less than 80 percent of normal operating capacity, due to exceptionally low precipitation, and/or carryover storage from the previous year.
- The snowpack and inflows that feed Spada Reservoir are less than 80 percent of normal levels..

B. The following condition exists after April 1:

- The 50% Probability Projection shows that the Spada Reservoir will drop to 1380 elevation ("No Power Generation" level).and there is a forecast of low fall precipitation for refill. This projection has a 50% probability of being exceeded and a 50% probability of not being exceeded (i.e. having a reservoir level below the projection.)

The Advisory Stage will focus on external communications. The City will inform wholesale and retail customers that the potential exists for a future water shortage. This message will include the following basic elements:

- There is a lower than normal supply of water in the Spada reservoir.
- The conditions may return to normal, but it is too early to tell.
- If the conditions don't improve, additional steps may have to be taken to reduce water consumption.
- Customers are encouraged to use water wisely to avoid the possibility of more stringent actions.

In addition to advising customers about the potential of water shortage, the Advisory Stage will prompt a number of actions:

- The Drought Advisory Committee will be assembled to monitor the situation and assign responsibilities.

- Data collection (e.g., stream flows, snowpack conditions, weather forecasts, reservoir levels) and computer modeling of projected supply, demand storage will be intensified.
- The City will develop a fact sheet that outlines the water situation for water system customer service staff throughout the EWSA. (Note: This should be initiated prior to any drought declaration.
- Planning and preparation for the Voluntary Stage will be initiated including an assessment of staffing impacts, training needs, and communication strategies.
- The City and/or its purveyors may consider the need for a rate surcharge to promote water conservation.

STAGE 2 – VOLUNTARY

The Voluntary Stage will be triggered by the City's Public Works Director, after consultation with the Drought Advisory Committee and water supply experts, upon determination it is necessary to maintain a reliable water supply. This determination should be based on the following conditions and professional discretion:

A. Both of these conditions exist prior to June 1st:

- Spada Reservoir storage is not projected to be at standard operating capacity as of June 1, due to an exceptionally low snowpack, precipitation, and/or carryover storage from the previous year.
- Spada Reservoir storage and predicted inflows are at, or below, 75 percent of normal levels and indicate the need for a more systematic response to the water supply situation.

B. After June 1st, the 50% Probability Projection for Spada Reservoir goes below 1380 elevation and there is a projection for low fall precipitation to start refilling the reservoir.

The Voluntary Stage will be a call to action. The City will inform wholesale and retail customers that water supply conditions have not improved and that their help is needed to reduce water consumption. This message will include the following elements:

- The water supply in Spada reservoir continues to be significantly lower than normal.
- There is a reasonable probability that the conditions will not return to normal in the near future.
- Water purveyors in the EWSA are taking steps to limit water use.

- Customers are encouraged to voluntarily reduce demand to avoid the need for more stringent actions in the future.

In the Voluntary Stage, the City and its purveyors will implement a number of water-saving steps and will ask retail customers to limit certain specific water-related activities. These actions are shown in Figure 1:

FIGURE 1: Stage 2 Voluntary Actions

City/Purveyor Actions	Retail Customer Actions
• Limit all non-essential domestic uses of water	• Limit all non-essential domestic uses of water
• Limit landscape irrigation around public facilities	• Limit car washing, driveway cleaning, and pressure washing
• Limit irrigation of parks and median/gateway areas	• Limit irrigation of golf fairways and cemeteries
• Limit street washing and other non-essential services	•
• Limit the frequency of water system flushing activities	• Limit recreational uses of water

In addition to promoting voluntary water consumption, the Voluntary Stage will prompt a number of other actions:

- The Drought Advisory Committee will begin meeting on a regular basis to coordinate internal and external actions, including setting goals for Stage 2.
- Systematic communications will be established with elected officials throughout the EWSA.
- A communications plan will be developed and implemented to keep customers informed about the water situation, promote conservation strategies, and encourage behavioral changes.
- Watering (irrigation) guidelines will be established and communicated to the City's wholesale and retail customers.
- Planning and preparation for the Mandatory Stage will be initiated including an assessment of staffing impacts, training needs, and communication strategies.
- The City and/or its purveyors may implement a rate surcharge to promote water conservation.

<u>STAGE 3 – MANDATORY</u>

The Public Works Director will authorize progressing to Mandatory Stage based on the recommendations of the Drought Advisory Committee. This will be triggered by two primary conditions:

- Supply conditions have become progressively more serious, this trend is expected to continue or worsen, and the goals established in the Voluntary Stage have not been achieved.
- Supply modeling indicates that demand levels must be reduced by specific, quantifiable levels to avoid serious impacts on the ability to meet essential water needs in the future. Supply modeling indicates that expected demands may not be met if this trend continues.

The Mandatory Stage will identify specific water conservation actions customers are required to take. The City will inform its wholesale and retail customers that voluntary actions have not been successful and that restrictions must be imposed to address the water shortage situation. This message will include the following elements:

- The water supply in Spada reservoir is lower than normal and is unlikely to return to normal conditions.
- The voluntary approach has not resulted in the necessary savings.
- Water purveyors in the EWSA are instituting water restrictions to ensure that there is an adequate supply throughout the duration of the shortage period.
- Customers are instructed to eliminate certain water-use activities to avoid more stringent measures in the future.
- Water purveyors will be implementing an enforcement plan to monitor water use and address violations.

In the Mandatory Stage, the City and its purveyors will eliminate all non-essential uses of water and will ask retail customers to eliminate a variety of water-related activities. These actions are shown in Figure 2:

FIGURE 2: Stage 3 Mandatory Actions

City/Purveyor Actions	Retail Customer Actions
• Eliminate all non-essential services	• Eliminate all non-essential

and uses of water	domestic uses of water
• Eliminate landscape irrigation around public facilities	• Eliminate washing cars, spray cleaning, and pressure washing
• Eliminate irrigation of parks and median/gateway areas	• Eliminate irrigation of residential gardens and lawns
• Eliminate non-essential system flushing activities	• Eliminate irrigation of golf fairways and cemeteries
• Eliminate non-essential sewer flushing activities	• Eliminate all recreational uses of water
• Restrict Fire Department training activities	• Reduce commercial uses of water to prescribed levels
• Limit water sales outside the normal service area	• Reduce process water usage to prescribed levels

In addition to prescribing mandatory conservation actions, the Mandatory Stage will prompt a number of other actions:

- Water purveyors in the EWSA will be assigned a percent reduction goal they are required to achieve.
- A communications plan will be developed and implemented to inform customers about the severity of the water situation and to publicize the restrictions.
- An enforcement plan will be developed that defines the enforcement mechanism(s), identifies staffing and management of the enforcement process, and defines procedures for dealing with violators.
- A policy will be developed for granting water restriction exemptions that identifies the exemption criteria, an application procedure, and the evaluation/determination process.
- Planning and preparation for the Emergency Stage will be initiated including an assessment of staffing impacts, training needs, and communication strategies.
- The City and/or its purveyors may implement a rate surcharge.

STAGE 4 – EMERGENCY

The likelihood of the Emergency Stage is extremely remote and no drought-related emergency has occurred in the history of the City. The Emergency Stage identifies actions that will be taken only when a shortage of water for public health and safety is imminent. This stage is characterized by two things. First, increasingly stringent restrictions will be established and enforced. Second, significant rate surcharges may be implemented to reduce consumption.

The City will inform its wholesale and retail customers that all previous actions have not been successful and that emergency restrictions must be imposed to address the water shortage. This message will include the following elements:

- The water shortage problem is severe and has become a public emergency.
- All non-essential uses of water must be eliminated.
- Taste and odor water quality problems may occur due to system-wide reductions of water consumption and system flushing.
- Water pressure problems may occur throughout the water system.
- There will be increased enforcement of the water-use restrictions and violators will be fined.
- The City and/or purveyors may implement a rate surcharge.

Given the unique nature of the Emergency Stage, a list of actions will be developed by the Drought Advisory Committee based on the characteristics of the water shortage event.

Appendix W-M

Capital Improvement Project Sheets

THIS PAGE INTENTIONALLY BLANK

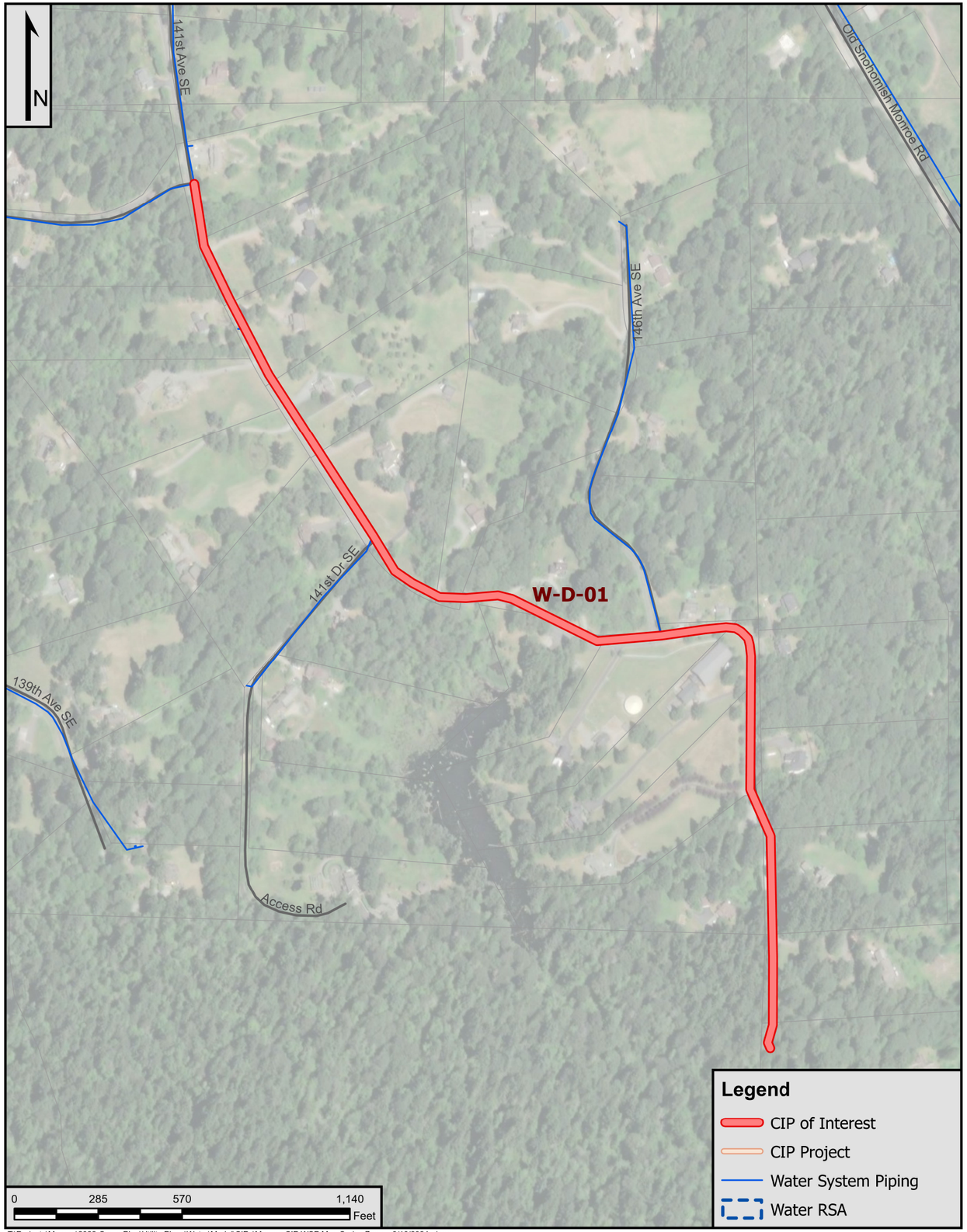

T:\Projects\Monroe\2022-Comp Plan\Utility Plans\Water\Model\CIPs\Monroe CIP WSP Map Series 7.aprx 9/10/2024 rjones

City of Monroe Utility Plan Update - Water

Project Name: W-D-01

Project Information

Project Description:
Replace 6" AC - 141st Ave SE; 6-year, Priority A
Existing: 6-inch, AC
Proposed: 8-inch, DI

Project Duration:	2025 - 2026	**Length of Pipe (ft):**	4,200 ft
Special Considerations:		**Project Location:**	Piping along 141st Ave SE from Access Road south to dead end of 141st Ave SE

Estimated Cost Breakdown

Total Opinion of Probable Project Cost	$ 1,970,000

Assumptions:

Total Opinion of Probably Project Cost is rounded up to the nearest $10,000 and presented as 2024 dollars. To escalate to future dollars: from 2024 for the first 6 years of the Capital Improvement Program an inflation factor of 3.0% is utilized, and for years 7 to 20, an inflation factor of 2.4% is utilized.

City Notes:

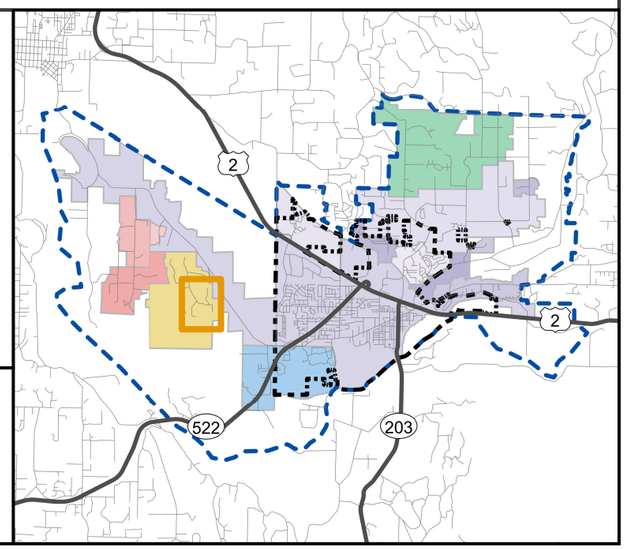

bhc CONSULTANTS
September 2024

Credits: Maxar

Water System: City of Monroe 2023 and 2024

Snohomish County base data 2023

Data sources supplied may not reflect current or actual conditions. This map is a geographic representation based on information available. It does not represent survey data. No warranty is made concerning the accuracy, currency, or completeness of data depicted on this map. BHC Consultants LLC., assumes no responsibility for the validity of any information presented herein, nor any responsibility for the use or misuse of the data.

COPYRIGHT © 2024 BHC CONSULTANTS LLC., ALL RIGHTS RESERVED

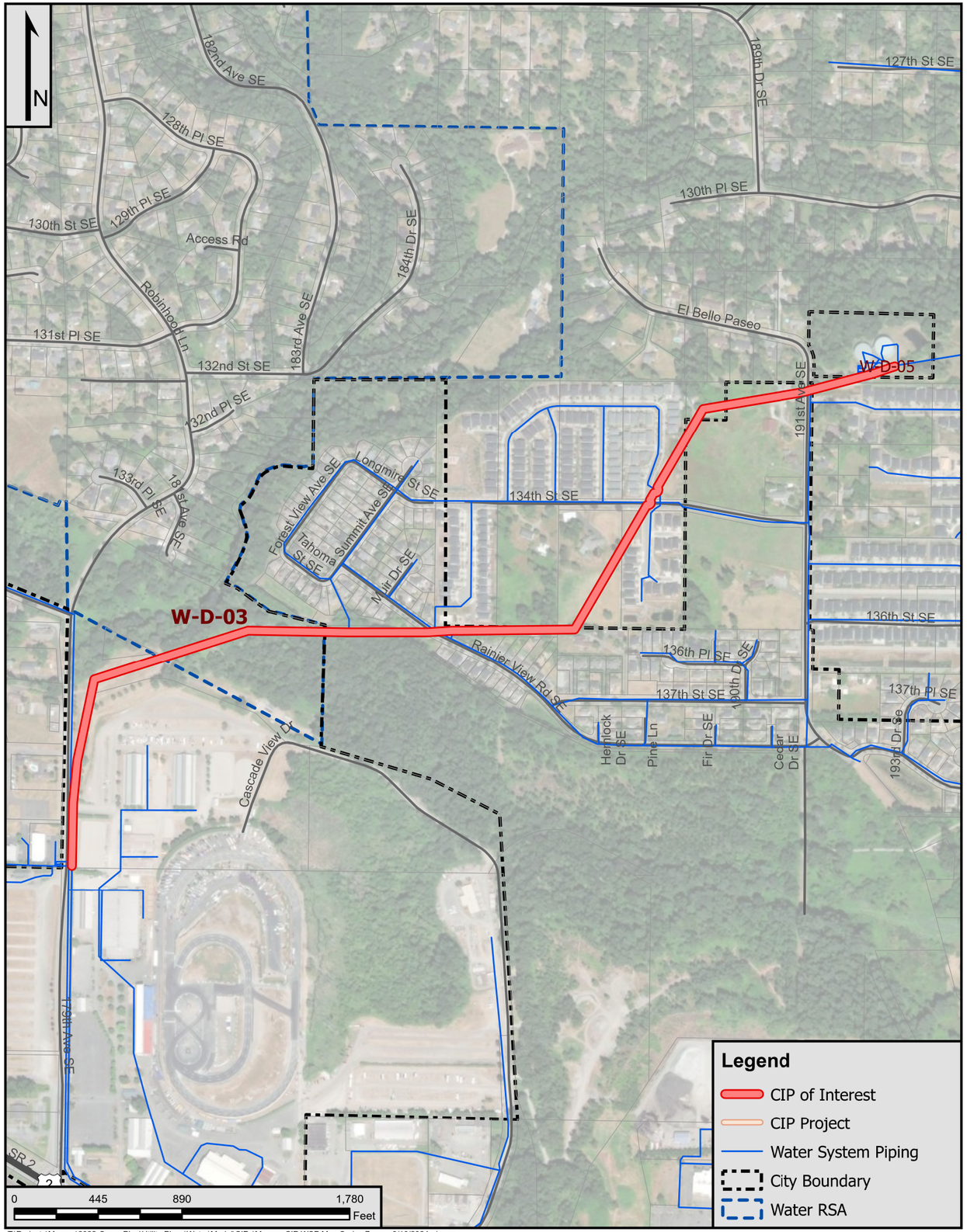

T:\Projects\Monroe\2022-Comp Plan\Utility Plans\Water\Model\CIPs\Monroe CIP WSP Map Series 7.aprx 9/10/2024 rjones

City of Monroe Utility Plan Update - Water

Project Name: W-D-03

Project Information

Project Description:
Trombley Hill from Reservoir to Airport/179th SE; 6-year, Priority A
Existing: 16-inch, AC, DI
Proposed: 16-inch, DI, HDPE

Project Duration:	2025 - 2026	**Length of Pipe (ft):**	6,100 ft

Special Considerations:
Transmission main does not primarily follow roads. Where this piping heads west along the city limits, the transmission line is near a gas main and will be HDPE from there south to the PRV Station.

Project Location:
Transmission main piping from Trombley Reservoir Campus to Airport PRV Station.

Estimated Cost Breakdown

Total Opinion of Probable Project Cost	$ 4,060,000

Assumptions:
Total Opinion of Probably Project Cost is rounded up to the nearest $10,000 and presented as 2024 dollars. To escalate to future dollars: from 2024 for the first 6 years of the Capital Improvement Program an inflation factor of 3.0% is utilized, and for years 7 to 20, an inflation factor of 2.4% is utilized.

City Notes:

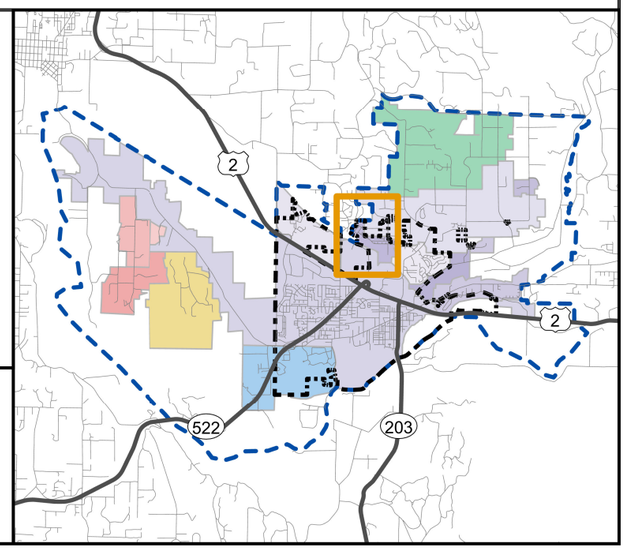

bhc CONSULTANTS
September 2024

Credits: Maxar

Water System: City of Monroe 2023 and 2024

Snohomish County base data 2023

Data sources supplied may not reflect current or actual conditions. This map is a geographic representation based on information available. It does not represent survey data. No warranty is made concerning the accuracy, currency, or completeness of data depicted on this map. BHC Consultants LLC., assumes no responsibility for the validity of any information presented herein, nor any responsibility for the use or misuse of the data.

COPYRIGHT © 2024 BHC CONSULTANTS LLC., ALL RIGHTS RESERVED

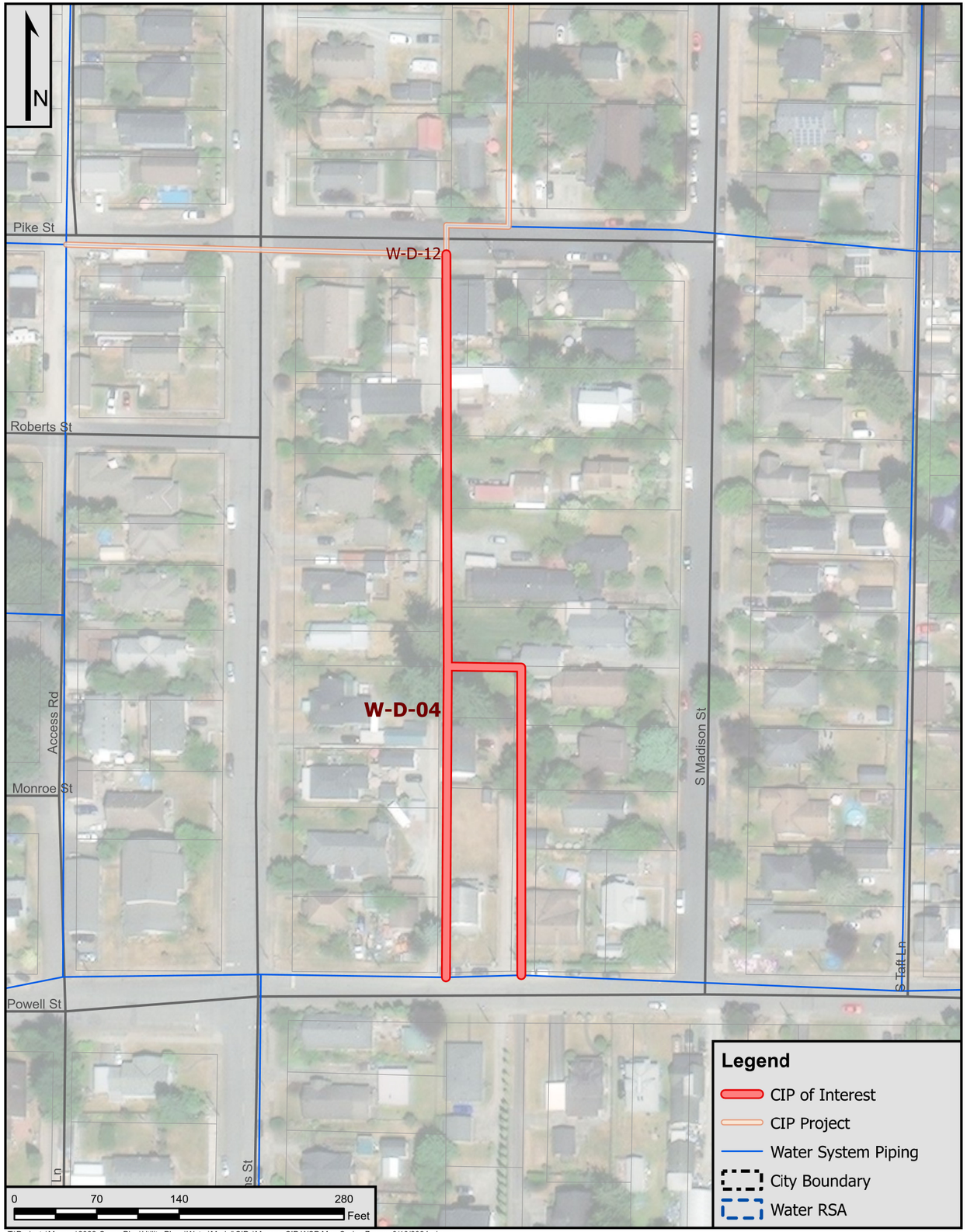

T:\Projects\Monroe\2022-Comp Plan\Utility Plans\Water\Model\CIPs\Monroe CIP WSP Map Series 7.aprx 9/10/2024 rjones

City of Monroe Utility Plan Update - Water

Project Name: W-D-04

Project Information

Project Description:
Wilson Lane SE Pipe Replacement; 6-year, Priority A
Existing: 4-inch, AC
Proposed: 8-inch, DI

Project Duration:	2025	**Length of Pipe (ft):**	1,000 ft
Special Considerations:		**Project Location:**	Replace residential piping along Wilson Lane SE from Pike St south to Powell St

Estimated Cost Breakdown

Total Opinion of Probable Project Cost	$ 150,000

Assumptions:

Total Opinion of Probably Project Cost is rounded up to the nearest $10,000 and presented as 2024 dollars. To escalate to future dollars: from 2024 for the first 6 years of the Capital Improvement Program an inflation factor of 3.0% is utilized, and for years 7 to 20, an inflation factor of 2.4% is utilized.

City Notes:

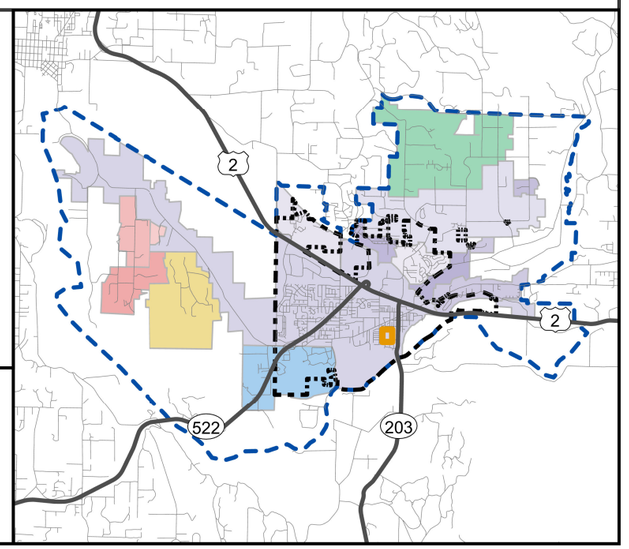

bhc CONSULTANTS
September 2024

Credits: Maxar, Microsoft

Water System: City of Monroe 2023 and 2024

Snohomish County base data 2023

Data sources supplied may not reflect current or actual conditions. This map is a geographic representation based on information available. It does not represent survey data. No warranty is made concerning the accuracy, currency, or completeness of data depicted on this map. BHC Consultants LLC., assumes no responsibility for the validity of any information presented herein, nor any responsibility for the use or misuse of the data.

COPYRIGHT © 2024 BHC CONSULTANTS LLC., ALL RIGHTS RESERVED

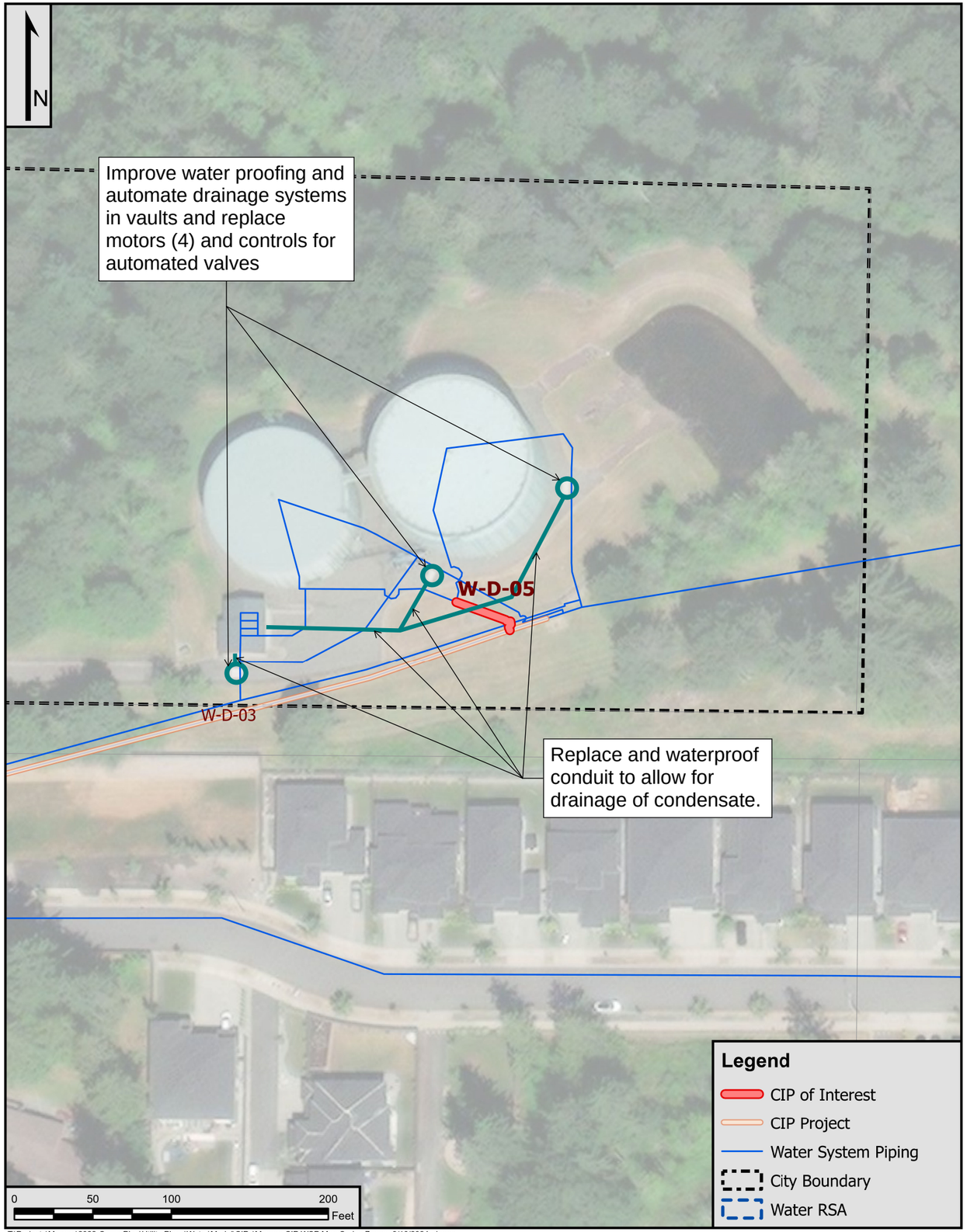

T:\Projects\Monroe\2022-Comp Plan\Utility Plans\Water\Model\CIPs\Monroe CIP WSP Map Series 7.aprx 9/10/2024 rjones

City of Monroe Utility Plan Update - Water

Project Name: W-D-05

Project Information

Project Description:
Replace local piping at Trombley Tank Campus; 6-year, Priority A
Existing: 10-inch, DI
Proposed: 12-inch, DI

Project Duration:	2025	**Length of Pipe (ft):**	100 ft

Special Considerations:

Replacement of critical transmission main.
Replace / waterproof conduit to allow for drainage of condensate, improve waterproffing, and automate drainage systems in campus vaults. Replace four motors and controls for automated valves.

Project Location:

Replace piping from the 12-inch mains connecting south of the Trombley Reservoirs and extends south to the transmission main to the west of the Trombley PRV

Estimated Cost Breakdown

Total Opinion of Probable Project Cost	$ 80,000

Assumptions:

Total Opinion of Probably Project Cost is rounded up to the nearest $10,000 and presented as 2024 dollars. To escalate to future dollars: from 2024 for the first 6 years of the Capital Improvement Program an inflation factor of 3.0% is utilized, and for years 7 to 20, an inflation factor of 2.4% is utilized.

City Notes:

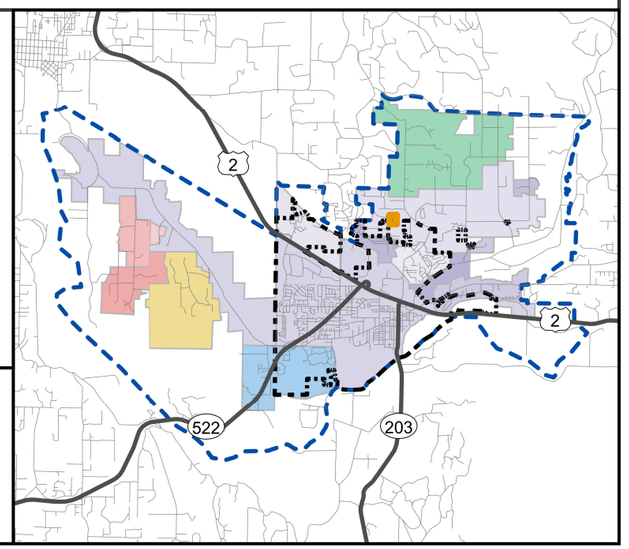

bhc CONSULTANTS
September 2024

Credits: Maxar

Water System: City of Monroe 2023 and 2024

Snohomish County base data 2023

Data sources supplied may not reflect current or actual conditions. This map is a geographic representation based on information available. It does not represent survey data. No warranty is made concerning the accuracy, currency, or completeness of data depicted on this map. BHC Consultants LLC., assumes no responsibility for the validity of any information presented herein, nor any responsibility for the use or misuse of the data.

COPYRIGHT © 2024 BHC CONSULTANTS LLC., ALL RIGHTS RESERVED

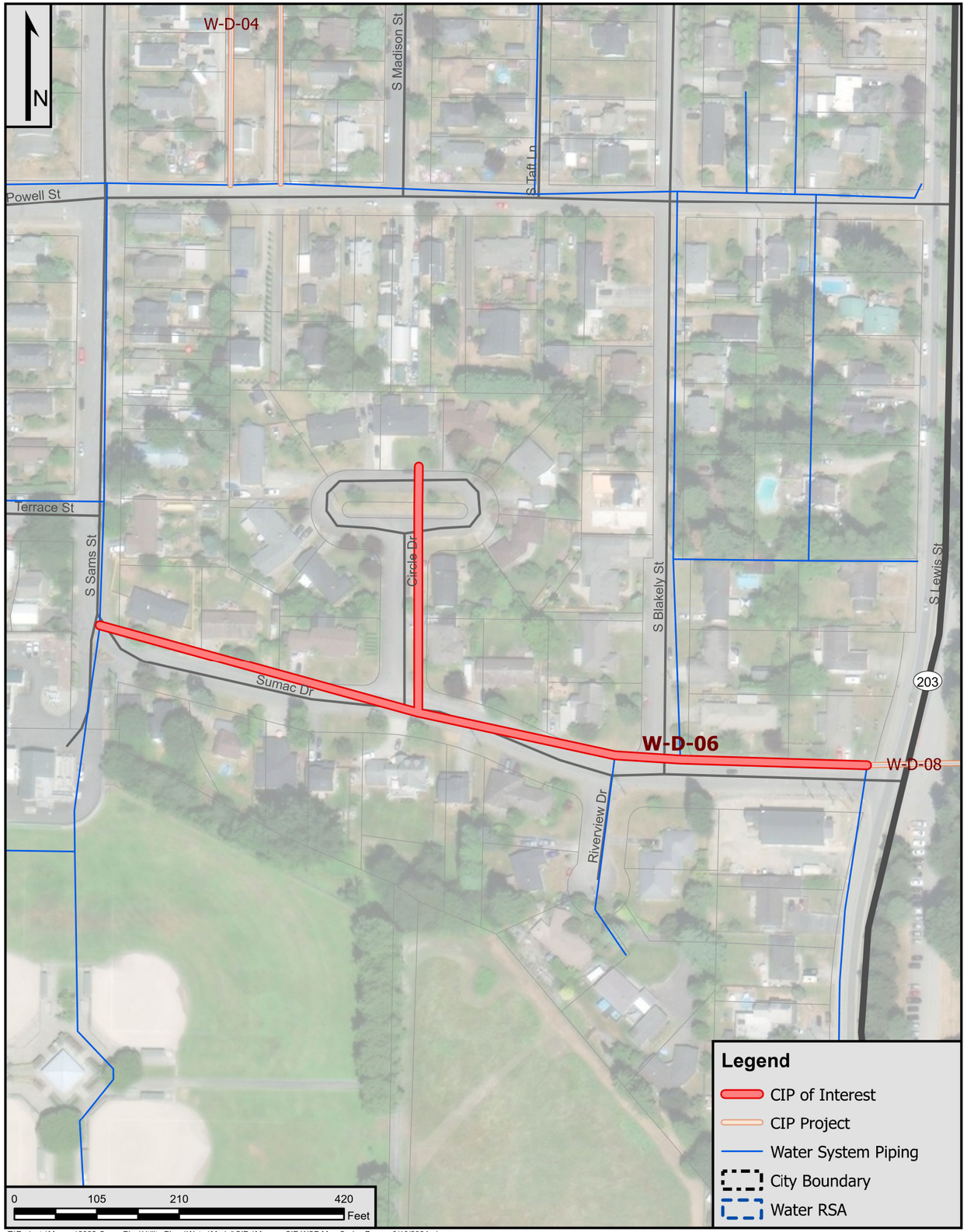

T:\Projects\Monroe\2022-Comp Plan\Utility Plans\Water\Model\CIPs\Monroe CIP WSP Map Series 7.aprx 9/10/2024 rjones

City of Monroe Utility Plan Update - Water

Project Name: W-D-06

Project Information

Project Description:
Circle Dr. to Sumac Pipe Replacement; 6-year, Priority A
Existing: 6-inch, AC
Proposed: 8-inch, DI

Project Duration:	2025	**Length of Pipe (ft):**	1,400 ft
Special Considerations:		**Project Location:**	Replace piping along Sumac Dr. from S Lewis St west to S Sam St

Estimated Cost Breakdown

Total Opinion of Probable Project Cost	$ 140,000

Assumptions:

Total Opinion of Probably Project Cost is rounded up to the nearest $10,000 and presented as 2024 dollars. To escalate to future dollars: from 2024 for the first 6 years of the Capital Improvement Program an inflation factor of 3.0% is utilized, and for years 7 to 20, an inflation factor of 2.4% is utilized.

City Notes:

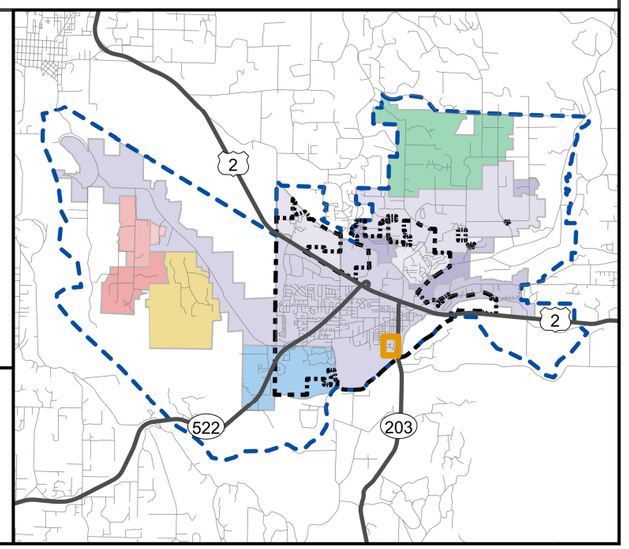

bhc CONSULTANTS
September 2024

Credits: Maxar

Water System: City of Monroe 2023 and 2024

Snohomish County base data 2023

Data sources supplied may not reflect current or actual conditions. This map is a geographic representation based on information available. It does not represent survey data. No warranty is made concerning the accuracy, currency, or completeness of data depicted on this map. BHC Consultants LLC., assumes no responsibility for the validity of any information presented herein, nor any responsibility for the use or misuse of the data.

COPYRIGHT © 2024 BHC CONSULTANTS LLC., ALL RIGHTS RESERVED

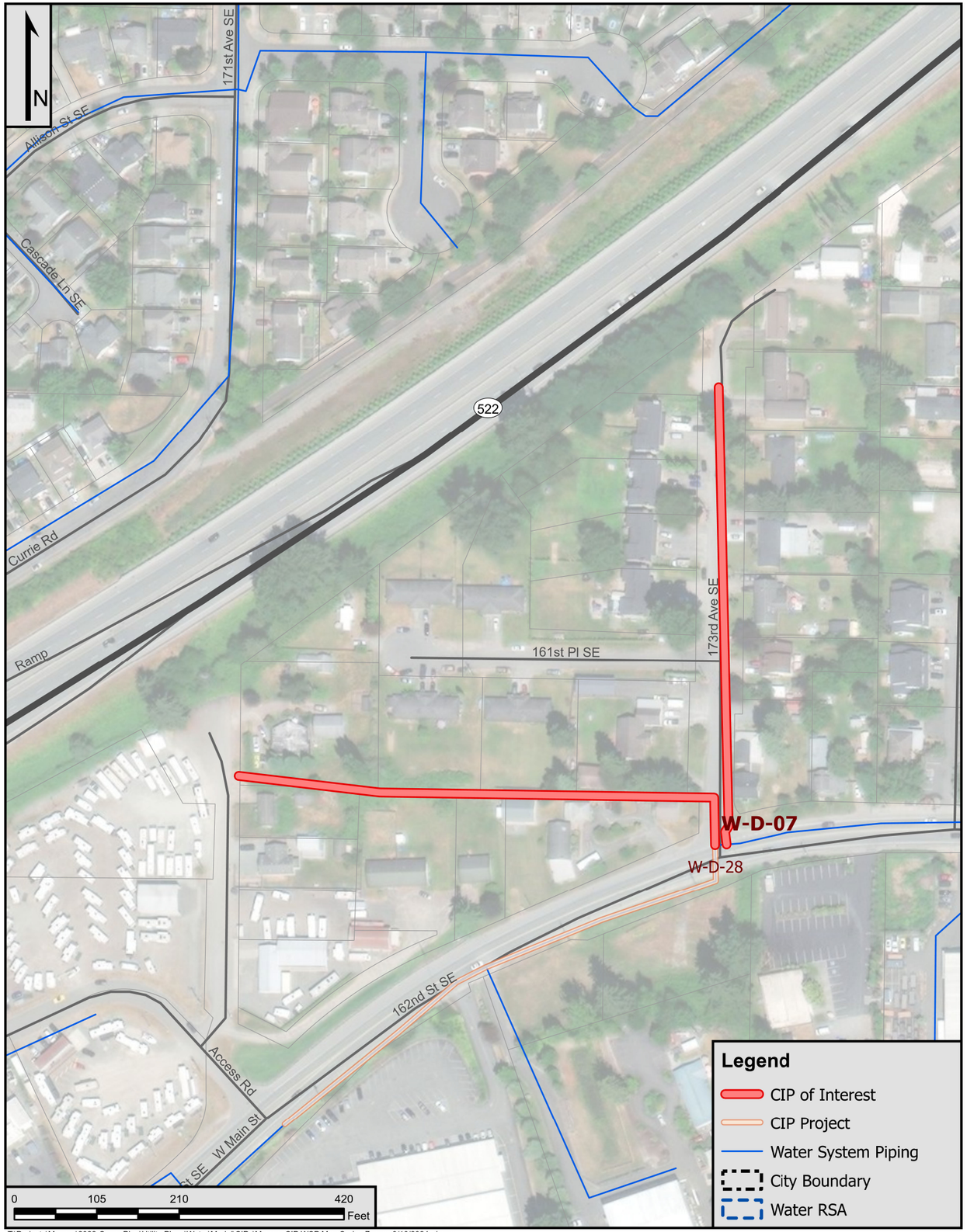

T:\Projects\Monroe\2022-Comp Plan\Utility Plans\Water\Model\CIPs\Monroe CIP WSP Map Series 7.aprx 9/10/2024 rjones

City of Monroe Utility Plan Update - Water

Project Name: W-D-07

Project Information

Project Description:
Replace AC 171st-173rd-161st; 6-year, Priority A
Existing: 6-inch, 8-inch, AC, DI
Proposed: 8-inch, DI

Project Duration:	2025 - 2026	**Length of Pipe (ft):**	1,300 ft

Special Considerations:

Project Location:
Replace piping north of main and 173rd Dr SE. One length of pipe extends north along 173rd Dr SE and the other serves local residences to the west of 173rd Dr SE along 161st Pl SE.

Estimated Cost Breakdown

Total Opinion of Probable Project Cost	$ 200,000

Assumptions:
Total Opinion of Probably Project Cost is rounded up to the nearest $10,000 and presented as 2024 dollars. To escalate to future dollars: from 2024 for the first 6 years of the Capital Improvement Program an inflation factor of 3.0% is utilized, and for years 7 to 20, an inflation factor of 2.4% is utilized.

City Notes:

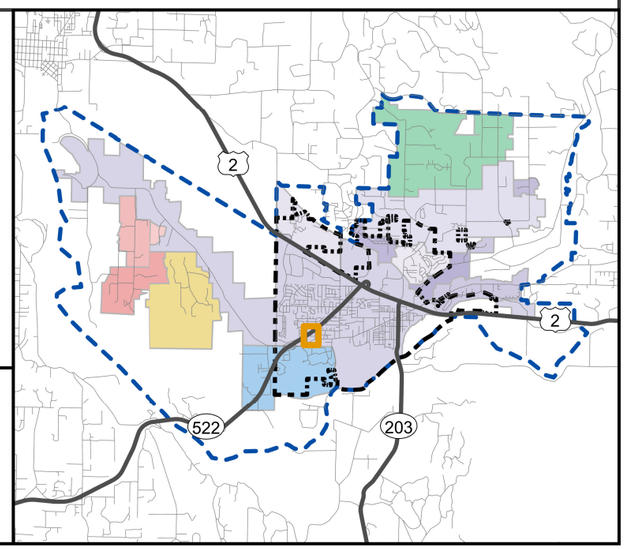

CONSULTANTS
September 2024

Credits: Maxar

Water System: City of Monroe 2023 and 2024

Snohomish County base data 2023

Data sources supplied may not reflect current or actual conditions. This map is a geographic representation based on information available. It does not represent survey data. No warranty is made concerning the accuracy, currency, or completeness of data depicted on this map. BHC Consultants LLC., assumes no responsibility for the validity of any information presented herein, nor any responsibility for the use or misuse of the data.

COPYRIGHT © 2024 BHC CONSULTANTS LLC., ALL RIGHTS RESERVED

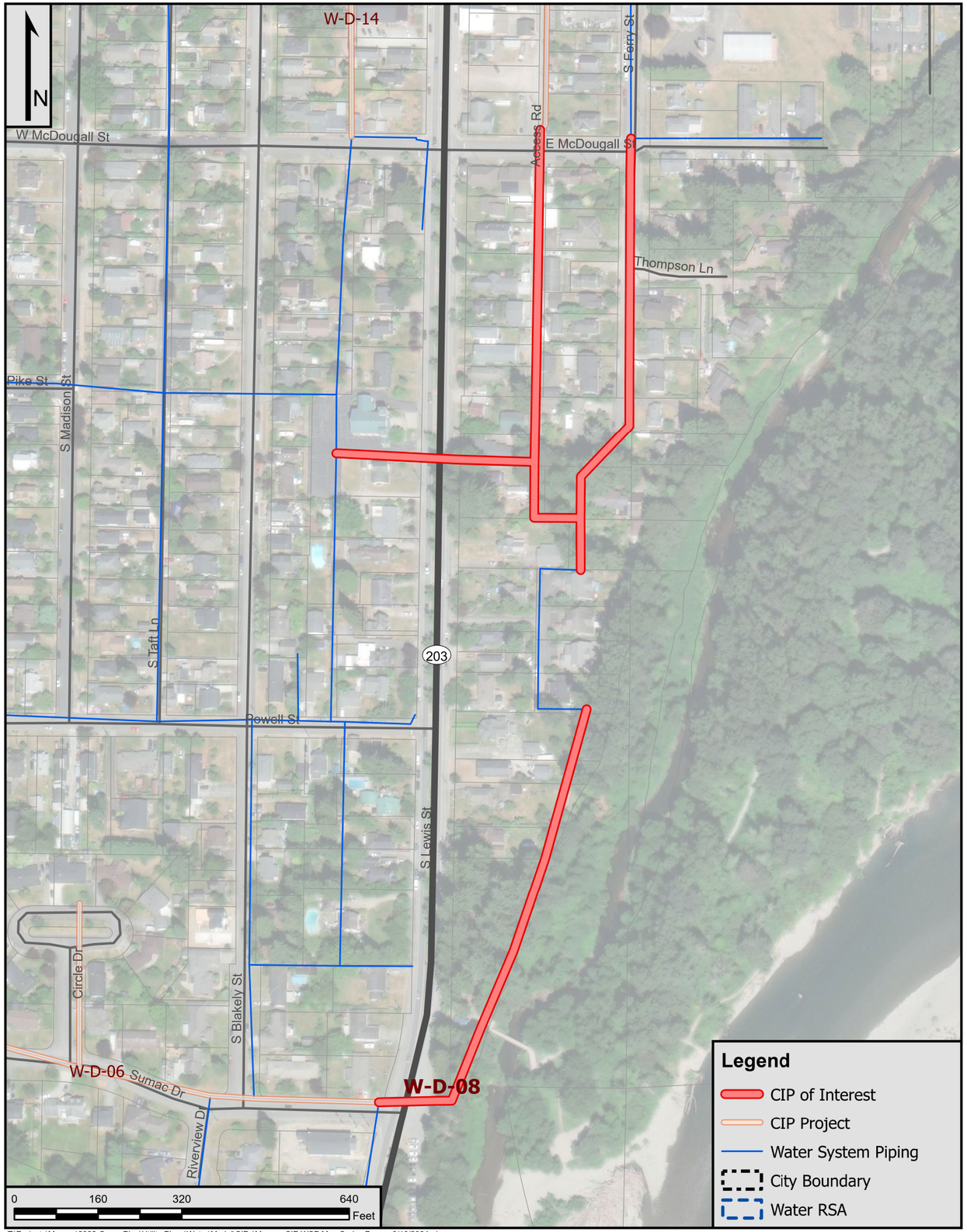

T:\Projects\Monroe\2022-Comp Plan\Utility Plans\Water\Model\CIPs\Monroe CIP WSP Map Series 7.aprx 9/10/2024 rjones

City of Monroe Utility Plan Update - Water

Project Name: W-D-08

Project Information

Project Description:
AC Pipe Repl. ($100,000/yr) - Lewis Street East Side McDougall to Lewis Park; 6-year, Priority A
Existing: 4-inch, 6-inch, AC
Proposed: 8-inch, DI

Project Duration:	2025 - 2026	**Length of Pipe (ft):**	3,100 ft

Special Considerations:
Portions of this project are in Al Borlin Park

Project Location:
Replace piping from Sumac Dr and S Lewis St extending north to Powell St north to E McDougall with piping along S Ferry Ave and the alley between S Lewis St and S Ferry Ave

Estimated Cost Breakdown

Total Opinion of Probable Project Cost	$ 190,000

Assumptions:
Total Opinion of Probably Project Cost is rounded up to the nearest $10,000 and presented as 2024 dollars. To escalate to future dollars: from 2024 for the first 6 years of the Capital Improvement Program an inflation factor of 3.0% is utilized, and for years 7 to 20, an inflation factor of 2.4% is utilized.

City Notes:

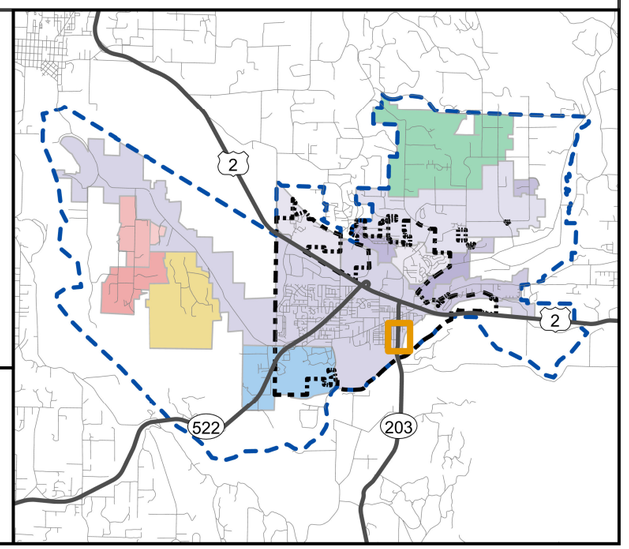

bhc CONSULTANTS
September 2024

Credits: Maxar

Water System: City of Monroe 2023 and 2024

Snohomish County base data 2023

Data sources supplied may not reflect current or actual conditions. This map is a geographic representation based on information available. It does not represent survey data. No warranty is made concerning the accuracy, currency, or completeness of data depicted on this map. BHC Consultants LLC., assumes no responsibility for the validity of any information presented herein, nor any responsibility for the use or misuse of the data.

COPYRIGHT © 2024 BHC CONSULTANTS LLC., ALL RIGHTS RESERVED

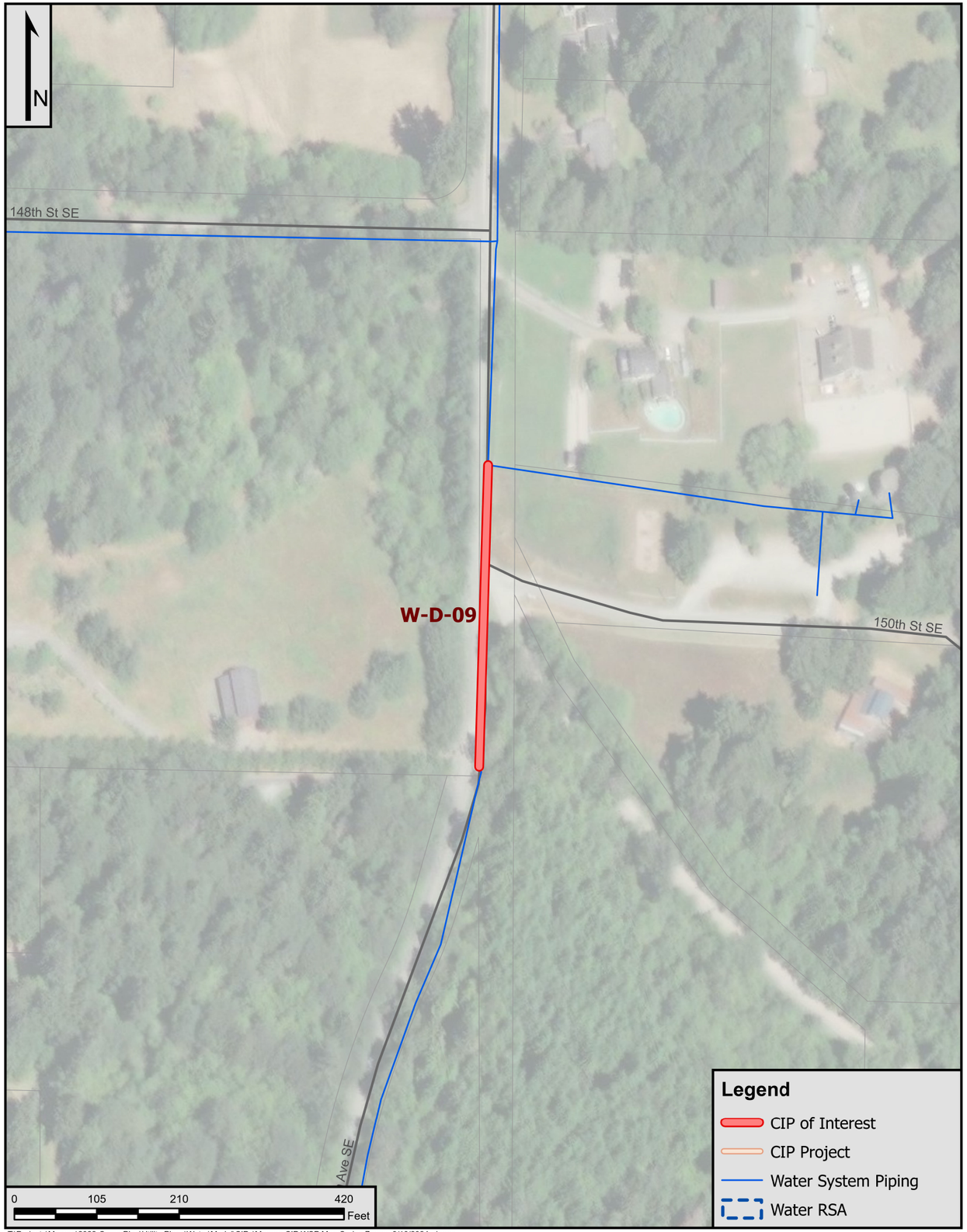

T:\Projects\Monroe\2022-Comp Plan\Utility Plans\Water\Model\CIPs\Monroe CIP WSP Map Series 7.aprx 9/10/2024 rjones

City of Monroe Utility Plan Update - Water

Project Name: W-D-09

Project Information

Project Description:
Install 8" along 127th; 6-year, Priority A
Existing: None,
Proposed: 8-inch, DI

Project Duration:	2025 - 2026	**Length of Pipe (ft):**	400 ft

Special Considerations:
Project will complete the loop around 127th Ave SE to 148th St SE and to 123rd Ave SE

Project Location:
Install piping along 127th from 150th to tie in with the Lord Hill Reservoirs

Estimated Cost Breakdown

Total Opinion of Probable Project Cost	$ 220,000

Assumptions:
Total Opinion of Probably Project Cost is rounded up to the nearest $10,000 and presented as 2024 dollars. To escalate to future dollars: from 2024 for the first 6 years of the Capital Improvement Program an inflation factor of 3.0% is utilized, and for years 7 to 20, an inflation factor of 2.4% is utilized.

City Notes:

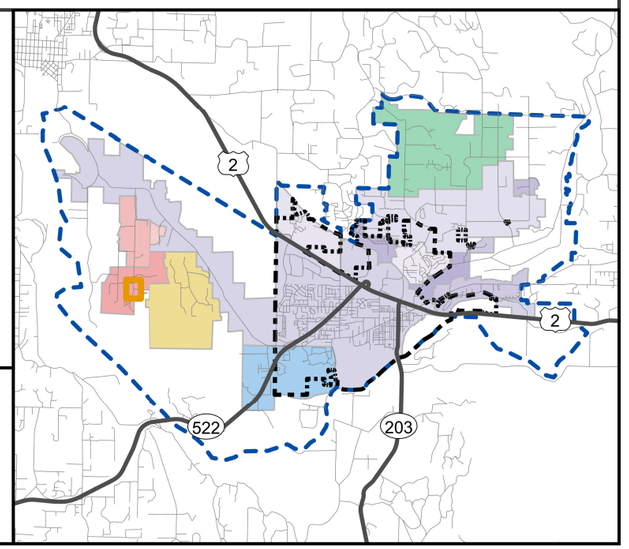

bhc CONSULTANTS
September 2024

Credits: Maxar

Water System: City of Monroe 2023 and 2024

Snohomish County base data 2023

Data sources supplied may not reflect current or actual conditions. This map is a geographic representation based on information available. It does not represent survey data. No warranty is made concerning the accuracy, currency, or completeness of data depicted on this map. BHC Consultants LLC., assumes no responsibility for the validity of any information presented herein, nor any responsibility for the use or misuse of the data.

COPYRIGHT © 2024 BHC CONSULTANTS LLC., ALL RIGHTS RESERVED

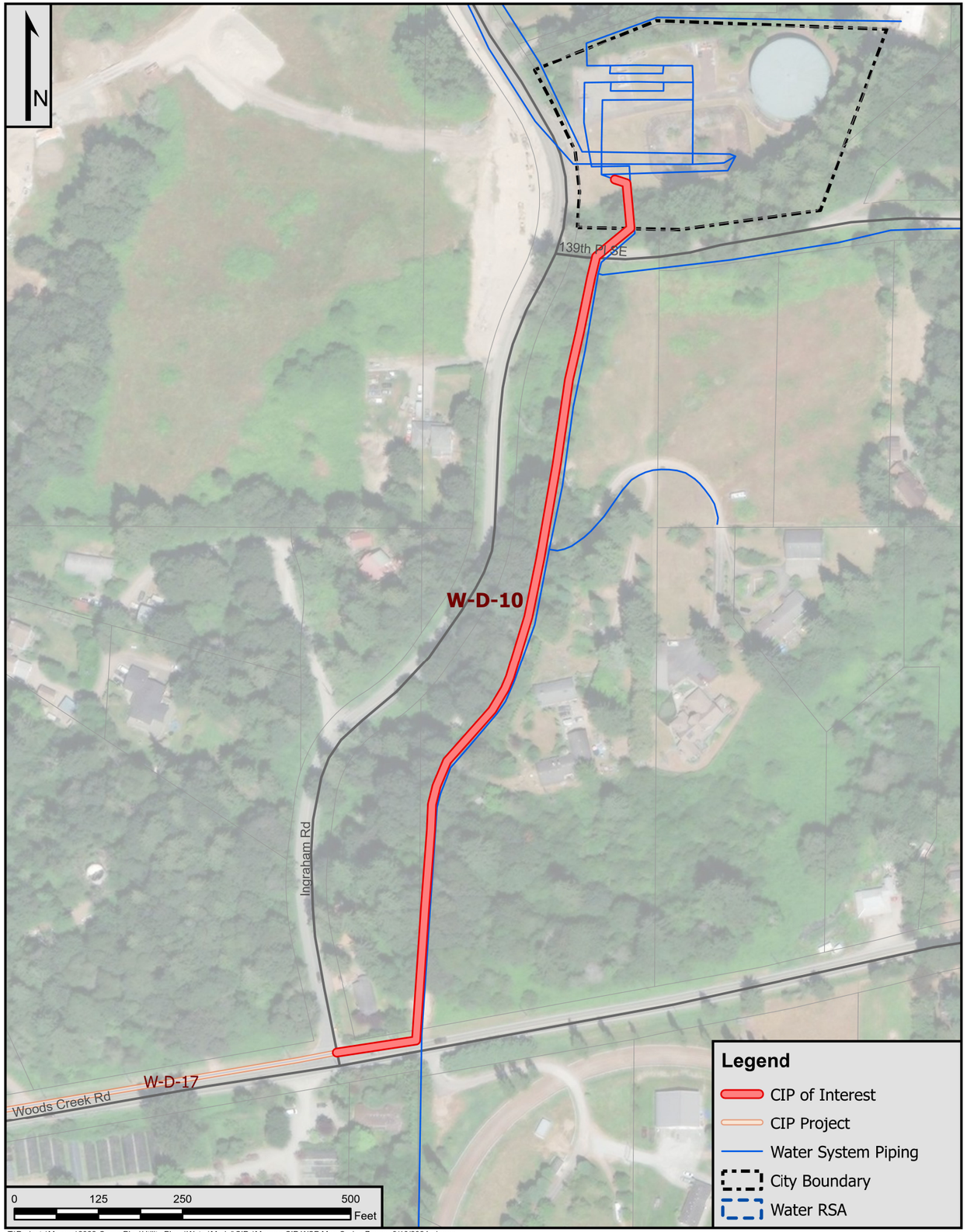

T:\Projects\Monroe\2022-Comp Plan\Utility Plans\Water\Model\CIPs\Monroe CIP WSP Map Series 7.aprx 9/10/2024 rjones

City of Monroe Utility Plan Update - Water

Project Name: W-D-10

Project Information

Project Description:
Ingraham 12" CI Replacement PH 3; 6-year, Priority A
Existing: 10-inch, DI
Proposed: 12-inch, DI

Project Duration:	2025 - 2029	**Length of Pipe (ft):**	1,500 ft

Special Considerations:
Transmission main

Project Location:
Piping east of Ingraham Road extending from the Ingraham Hill Reservoir Campus south to Woods Creek Rd.

Estimated Cost Breakdown

Total Opinion of Probable Project Cost	$ 3,060,000

Assumptions:
Total Opinion of Probably Project Cost is rounded up to the nearest $10,000 and presented as 2024 dollars. To escalate to future dollars: from 2024 for the first 6 years of the Capital Improvement Program an inflation factor of 3.0% is utilized, and for years 7 to 20, an inflation factor of 2.4% is utilized.

City Notes:

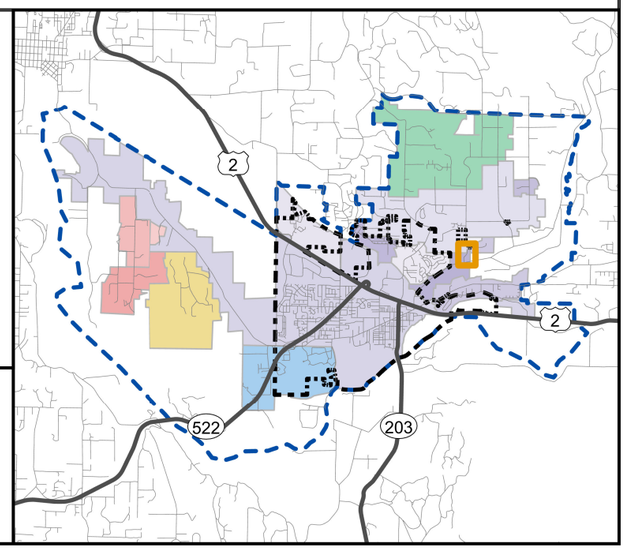

bhc CONSULTANTS
September 2024

Credits: Maxar

Water System: City of Monroe 2023 and 2024

Snohomish County base data 2023

Data sources supplied may not reflect current or actual conditions. This map is a geographic representation based on information available. It does not represent survey data. No warranty is made concerning the accuracy, currency, or completeness of data depicted on this map. BHC Consultants LLC., assumes no responsibility for the validity of any information presented herein, nor any responsibility for the use or misuse of the data.

COPYRIGHT © 2024 BHC CONSULTANTS LLC., ALL RIGHTS RESERVED

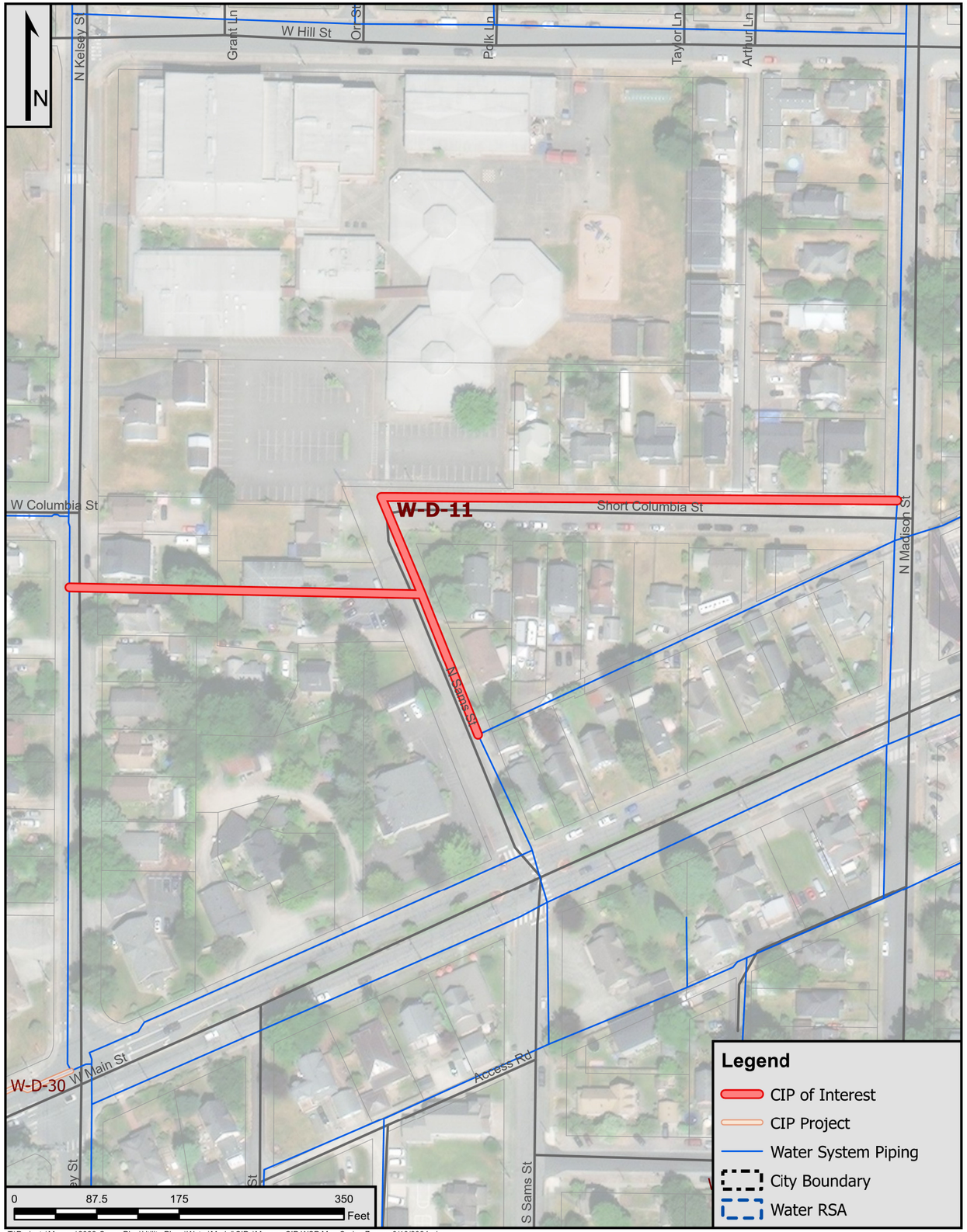

T:\Projects\Monroe\2022-Comp Plan\Utility Plans\Water\Model\CIPs\Monroe CIP WSP Map Series 7.aprx 9/10/2024 rjones

City of Monroe Utility Plan Update - Water

Project Name: W-D-11

Project Information

Project Description:
Short Columbia; 6-year, Priority A
Existing: 4-inch, 6-inch, AC
Proposed: 8-inch, DI

Project Duration:	2025 - 2026	**Length of Pipe (ft):**	1,200 ft
Special Considerations:		**Project Location:**	Piping along Short Columbia from North Madison St west to Kelsey St with portions along E Sam St.

Estimated Cost Breakdown

Total Opinion of Probable Project Cost	$ 300,000

Assumptions:

Total Opinion of Probably Project Cost is rounded up to the nearest $10,000 and presented as 2024 dollars. To escalate to future dollars: from 2024 for the first 6 years of the Capital Improvement Program an inflation factor of 3.0% is utilized, and for years 7 to 20, an inflation factor of 2.4% is utilized.

City Notes:

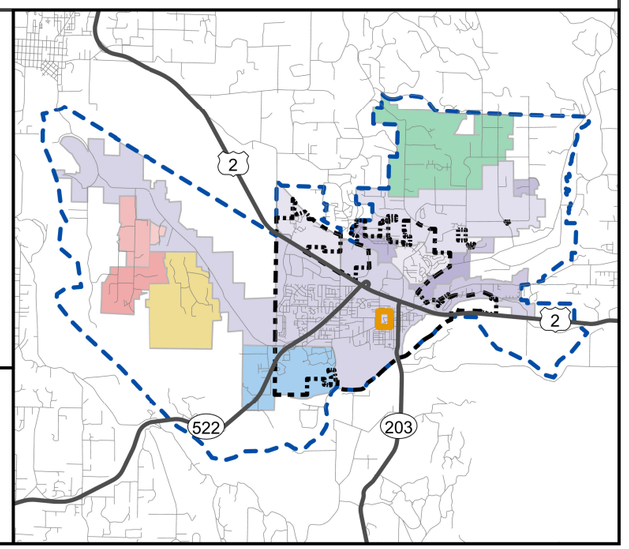

bhc CONSULTANTS
September 2024

Credits: Maxar

Water System: City of Monroe 2023 and 2024

Snohomish County base data 2023

Data sources supplied may not reflect current or actual conditions. This map is a geographic representation based on information available. It does not represent survey data. No warranty is made concerning the accuracy, currency, or completeness of data depicted on this map. BHC Consultants LLC., assumes no responsibility for the validity of any information presented herein, nor any responsibility for the use or misuse of the data.

COPYRIGHT © 2024 BHC CONSULTANTS LLC., ALL RIGHTS RESERVED

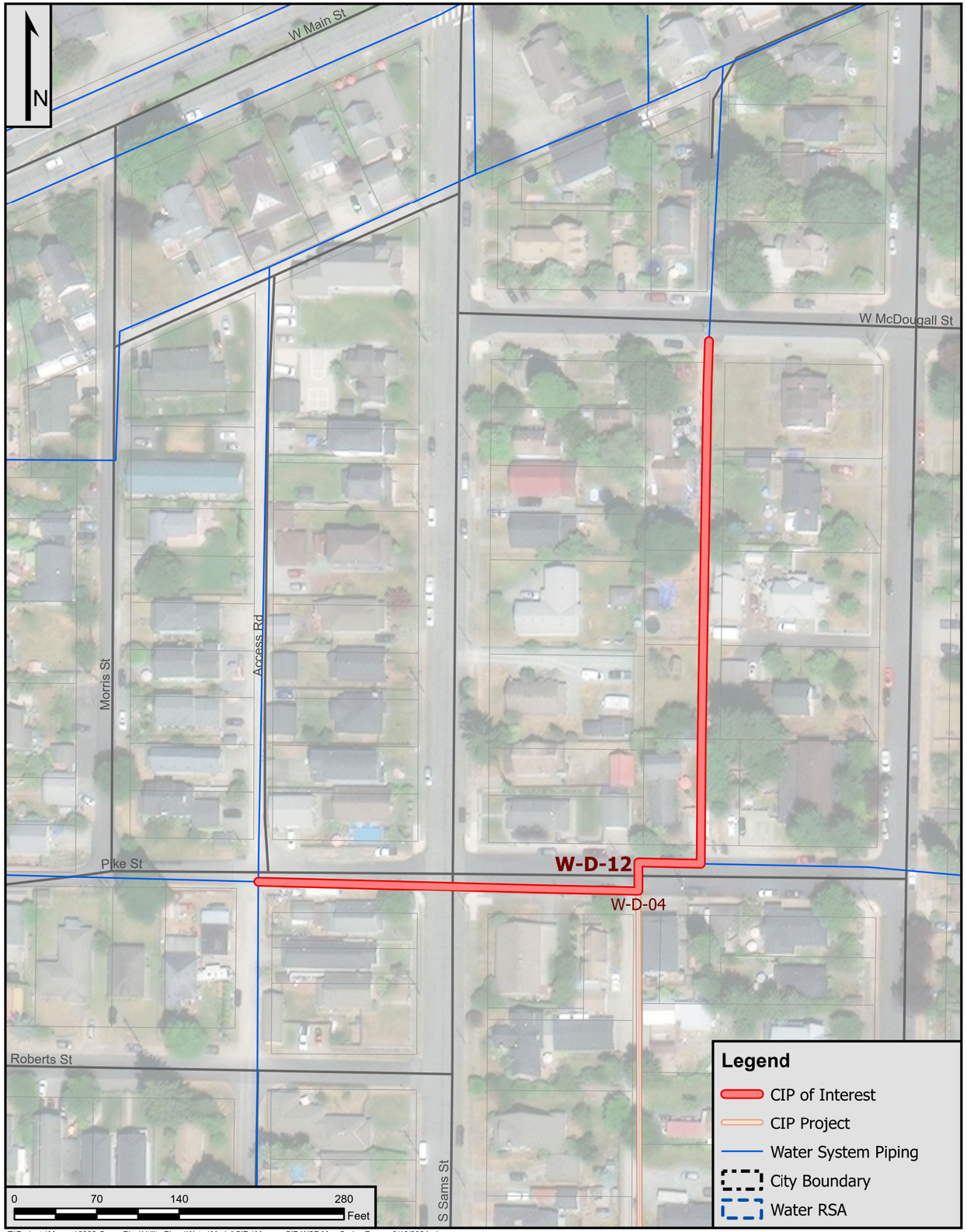

T:\Projects\Monroe\2022-Comp Plan\Utility Plans\Water\Model\CIPs\Monroe CIP WSP Map Series 7.aprx 9/10/2024 rjones

City of Monroe Utility Plan Update - Water

Project Name: W-D-12

Project Information

Project Description:
Alley between Madison and Sams/McDougall and Pike; 6-year, Priority A
Existing: 4-inch, AC
Proposed: 8-inch, DI

Project Duration:	2026 - 2027	**Length of Pipe (ft):**	900 ft
Special Considerations:		**Project Location:**	Replacement in Alley between Madison and Sam St from W McDougall St south to Pike St and extending east along Pike St to Adams Ln

Estimated Cost Breakdown

Total Opinion of Probable Project Cost	$ 300,000

Assumptions:

Total Opinion of Probably Project Cost is rounded up to the nearest $10,000 and presented as 2024 dollars. To escalate to future dollars: from 2024 for the first 6 years of the Capital Improvement Program an inflation factor of 3.0% is utilized, and for years 7 to 20, an inflation factor of 2.4% is utilized.

City Notes:

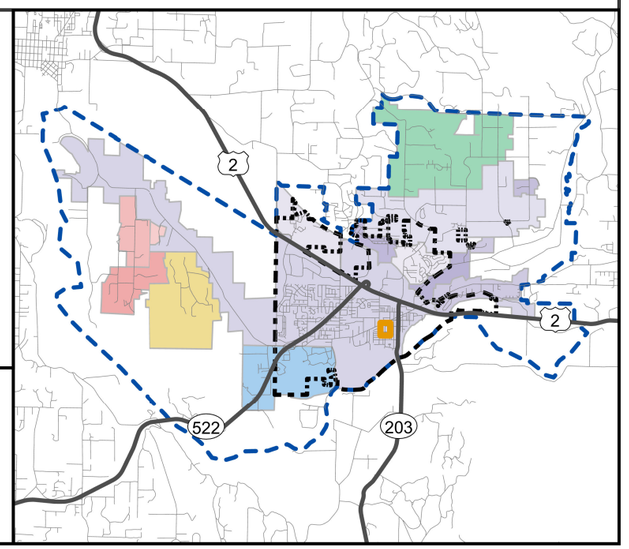

bhc CONSULTANTS
September 2024

Credits: Maxar

Water System: City of Monroe 2023 and 2024

Snohomish County base data 2023

Data sources supplied may not reflect current or actual conditions. This map is a geographic representation based on information available. It does not represent survey data. No warranty is made concerning the accuracy, currency, or completeness of data depicted on this map. BHC Consultants LLC., assumes no responsibility for the validity of any information presented herein, nor any responsibility for the use or misuse of the data.

COPYRIGHT © 2024 BHC CONSULTANTS LLC., ALL RIGHTS RESERVED

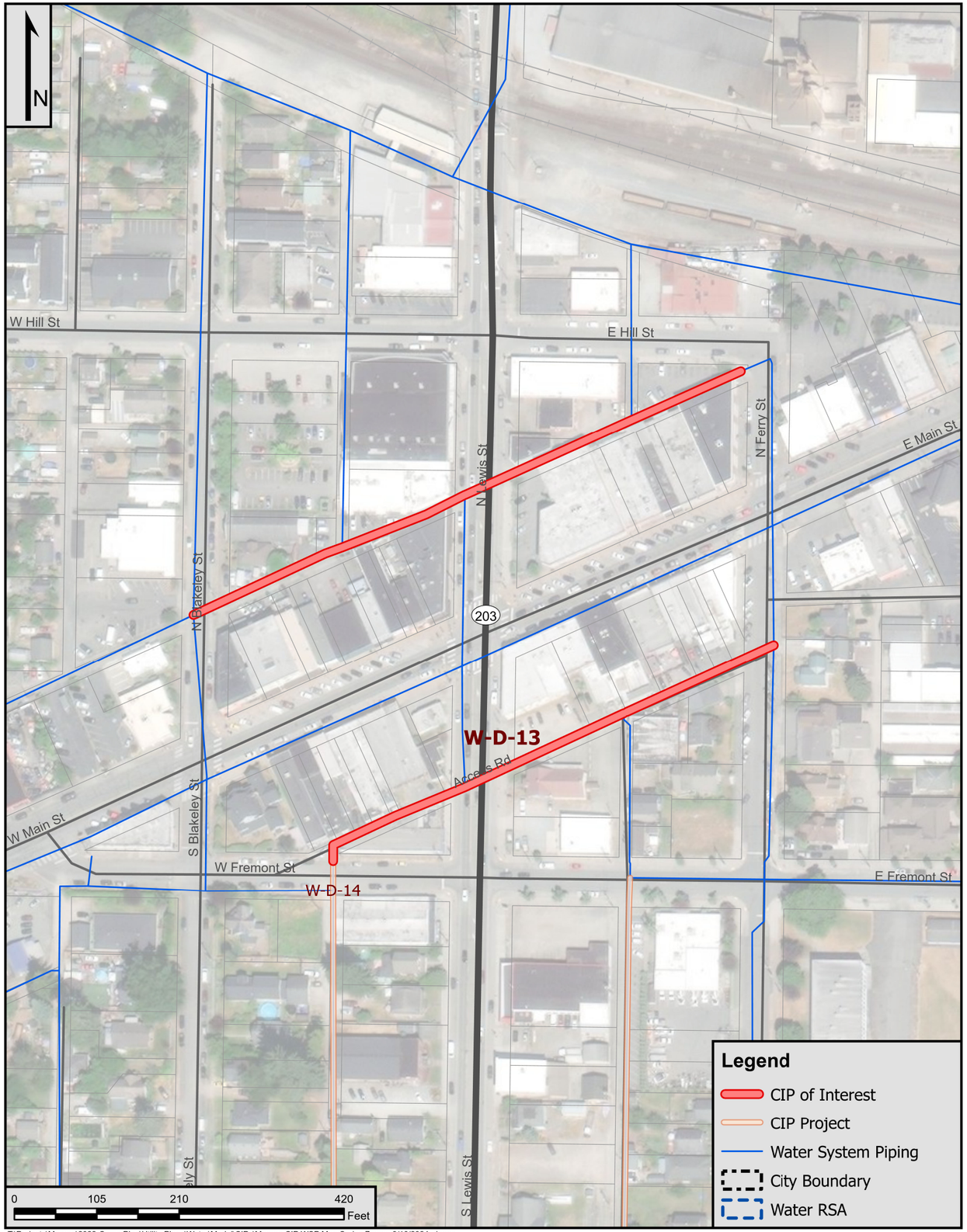

T:\Projects\Monroe\2022-Comp Plan\Utility Plans\Water\Model\CIPs\Monroe CIP WSP Map Series 7.aprx 9/10/2024 rjones

City of Monroe Utility Plan Update - Water

Project Name: W-D-13

Project Information

Project Description:
Alley parallel to Main St at Ferry to N Blakeley east to N Madison; 6-year, Priority A
Existing: 6-inch, AC
Proposed: 8-inch, 12-inch, DI

Project Duration:	2026 - 2027	**Length of Pipe (ft):**	1,400 ft

Special Considerations:

Piping east of the 6-inch connection in the alley between E Hill St and E Main St to South Ferry Avenue replaced with 12-inch piping

Project Location:

Replacement in alleys north and south of Main St from S Ferry Ave to S Blakeley St on the north side and from S Ferry Ave to W Fremont St on the south side of Main St.

Estimated Cost Breakdown

Total Opinion of Probable Project Cost	$ 650,000

Assumptions:

Total Opinion of Probably Project Cost is rounded up to the nearest $10,000 and presented as 2024 dollars. To escalate to future dollars: from 2024 for the first 6 years of the Capital Improvement Program an inflation factor of 3.0% is utilized, and for years 7 to 20, an inflation factor of 2.4% is utilized.

City Notes:

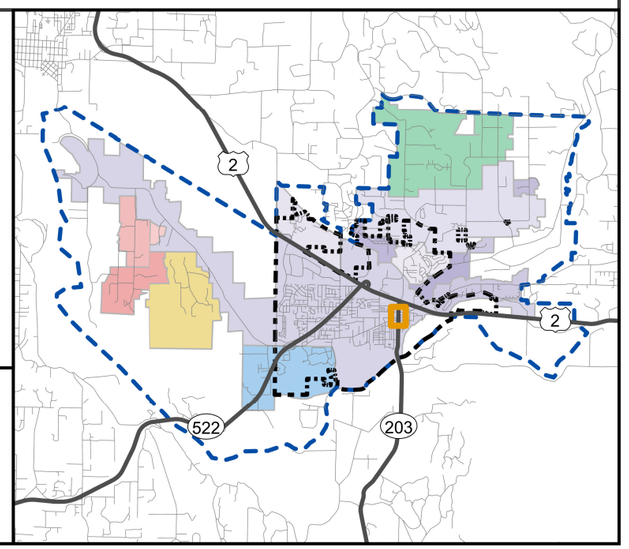

September 2024

Credits: Maxar

Water System: City of Monroe 2023 and 2024

Snohomish County base data 2023

Data sources supplied may not reflect current or actual conditions. This map is a geographic representation based on information available. It does not represent survey data. No warranty is made concerning the accuracy, currency, or completeness of data depicted on this map. BHC Consultants LLC., assumes no responsibility for the validity of any information presented herein, nor any responsibility for the use or misuse of the data.

COPYRIGHT © 2024 BHC CONSULTANTS LLC., ALL RIGHTS RESERVED

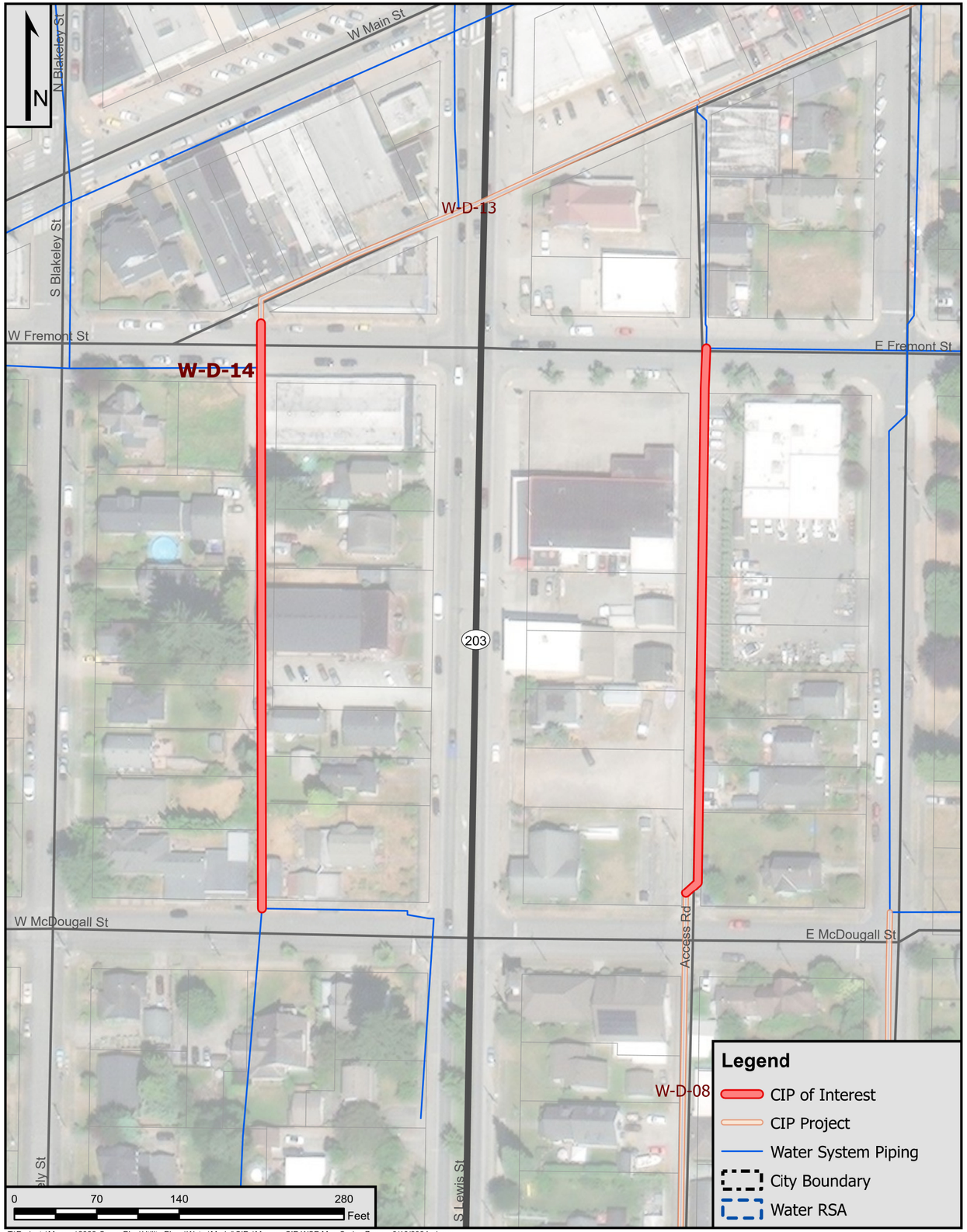

T:\Projects\Monroe\2022-Comp Plan\Utility Plans\Water\Model\CIPs\Monroe CIP WSP Map Series 7.aprx 9/10/2024 rjones

City of Monroe Utility Plan Update - Water

Project Name: W-D-14

Project Information

Project Description:
Alley parallel to Lewis and Blakeley Freemont to McDougall; 6-year, Priority A
Existing: 4-inch, AC, DI, UNK
Proposed: 10-inch, DI

Project Duration:	2026 - 2027	**Length of Pipe (ft):**	1,000 ft
Special Considerations:		**Project Location:**	Replacement between W Fremont St to W McDougall St in alley between S Blakeley St and S Lewis St and in alley between S Ferry Ave and S Lewis St

Estimated Cost Breakdown

Total Opinion of Probable Project Cost	$ 260,000

Assumptions:

Total Opinion of Probably Project Cost is rounded up to the nearest $10,000 and presented as 2024 dollars. To escalate to future dollars: from 2024 for the first 6 years of the Capital Improvement Program an inflation factor of 3.0% is utilized, and for years 7 to 20, an inflation factor of 2.4% is utilized.

City Notes:

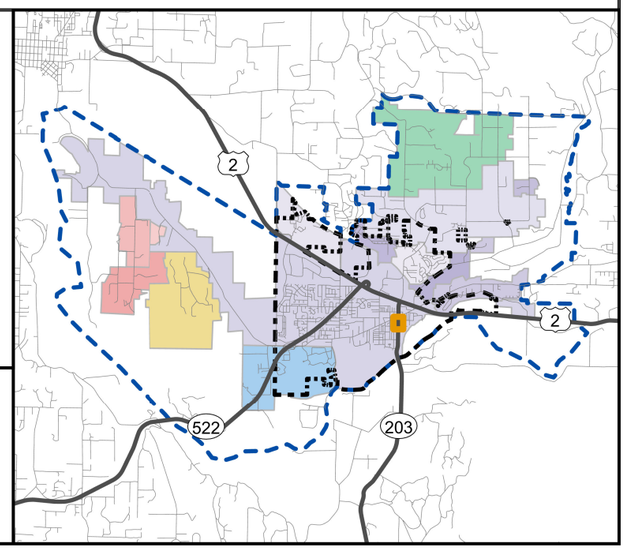

September 2024

Credits: Maxar

Water System: City of Monroe 2023 and 2024

Snohomish County base data 2023

Data sources supplied may not reflect current or actual conditions. This map is a geographic representation based on information available. It does not represent survey data. No warranty is made concerning the accuracy, currency, or completeness of data depicted on this map. BHC Consultants LLC., assumes no responsibility for the validity of any information presented herein, nor any responsibility for the use or misuse of the data.

COPYRIGHT © 2024 BHC CONSULTANTS LLC., ALL RIGHTS RESERVED

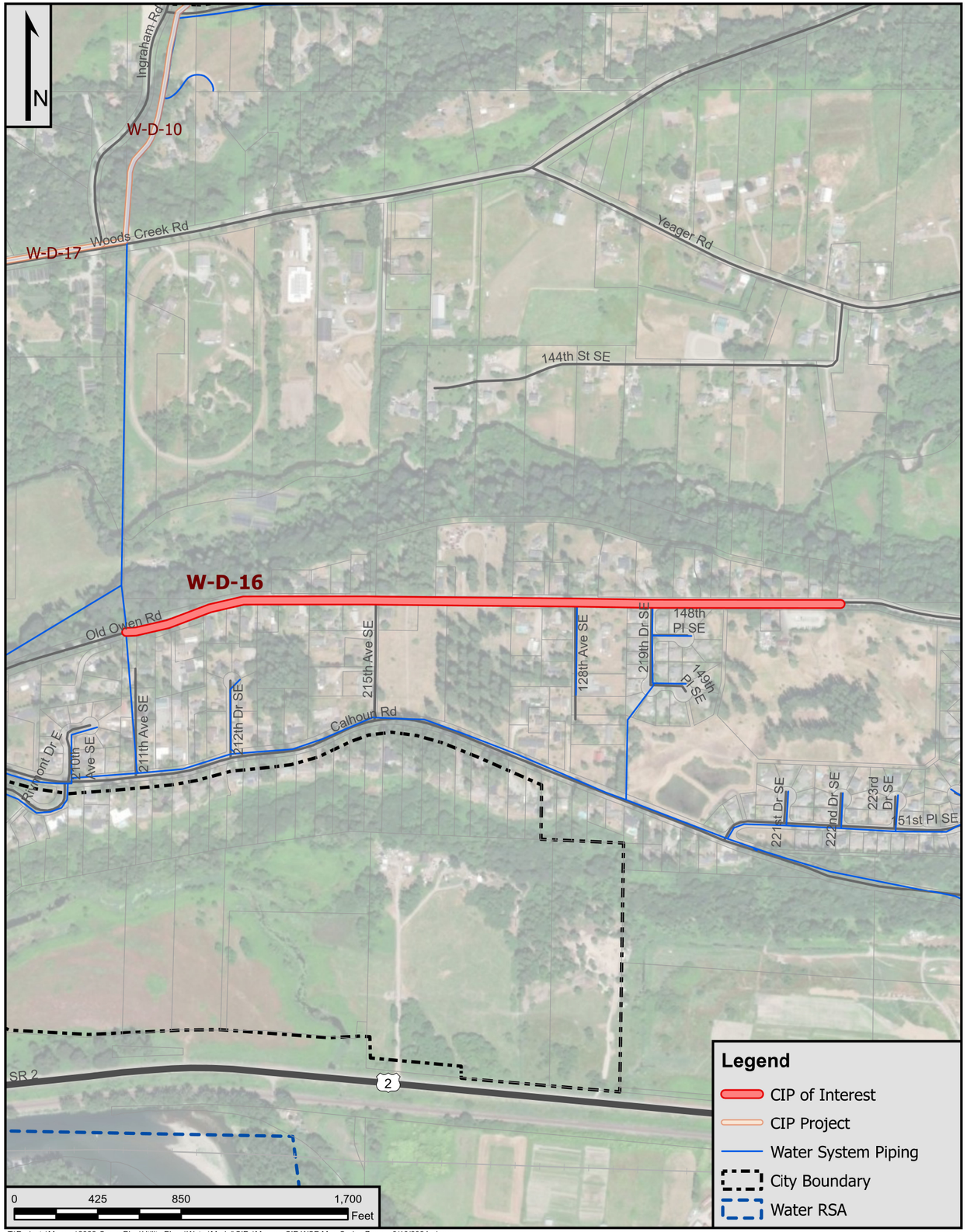

T:\Projects\Monroe\2022-Comp Plan\Utility Plans\Water\Model\CIPs\Monroe CIP WSP Map Series 7.aprx 9/10/2024 rjones

City of Monroe Utility Plan Update - Water

Project Name: W-D-16

Project Information

Project Description:
Replace 6" along Old Owen Rd; 6-year, Priority A
Existing: 6-inch, AC
Proposed: 8-inch, DI

Project Duration:	2027 - 2028	**Length of Pipe (ft):**	3,700 ft
Special Considerations:		**Project Location:**	Replace piping along Old Owen Rd from 212th Ave SE east nearly to 218th Ave SE

Estimated Cost Breakdown

Total Opinion of Probable Project Cost	$ 540,000

Assumptions:

Total Opinion of Probably Project Cost is rounded up to the nearest $10,000 and presented as 2024 dollars. To escalate to future dollars: from 2024 for the first 6 years of the Capital Improvement Program an inflation factor of 3.0% is utilized, and for years 7 to 20, an inflation factor of 2.4% is utilized.

City Notes:

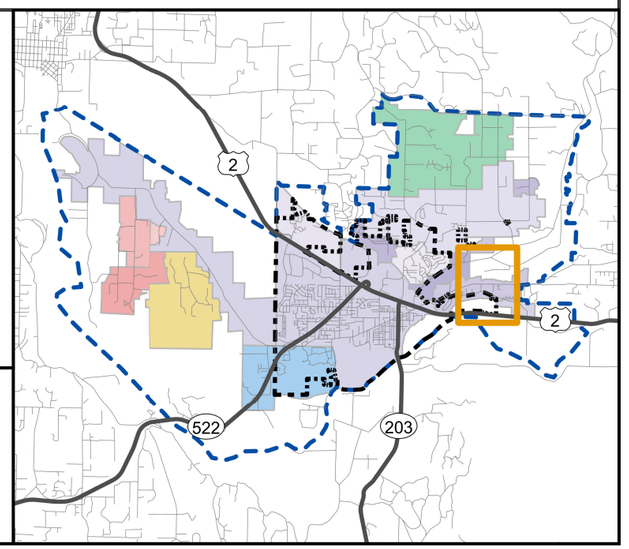

bhc CONSULTANTS
September 2024

Credits: Maxar

Water System: City of Monroe 2023 and 2024

Snohomish County base data 2023

Data sources supplied may not reflect current or actual conditions. This map is a geographic representation based on information available. It does not represent survey data. No warranty is made concerning the accuracy, currency, or completeness of data depicted on this map. BHC Consultants LLC., assumes no responsibility for the validity of any information presented herein, nor any responsibility for the use or misuse of the data.

COPYRIGHT © 2024 BHC CONSULTANTS LLC., ALL RIGHTS RESERVED

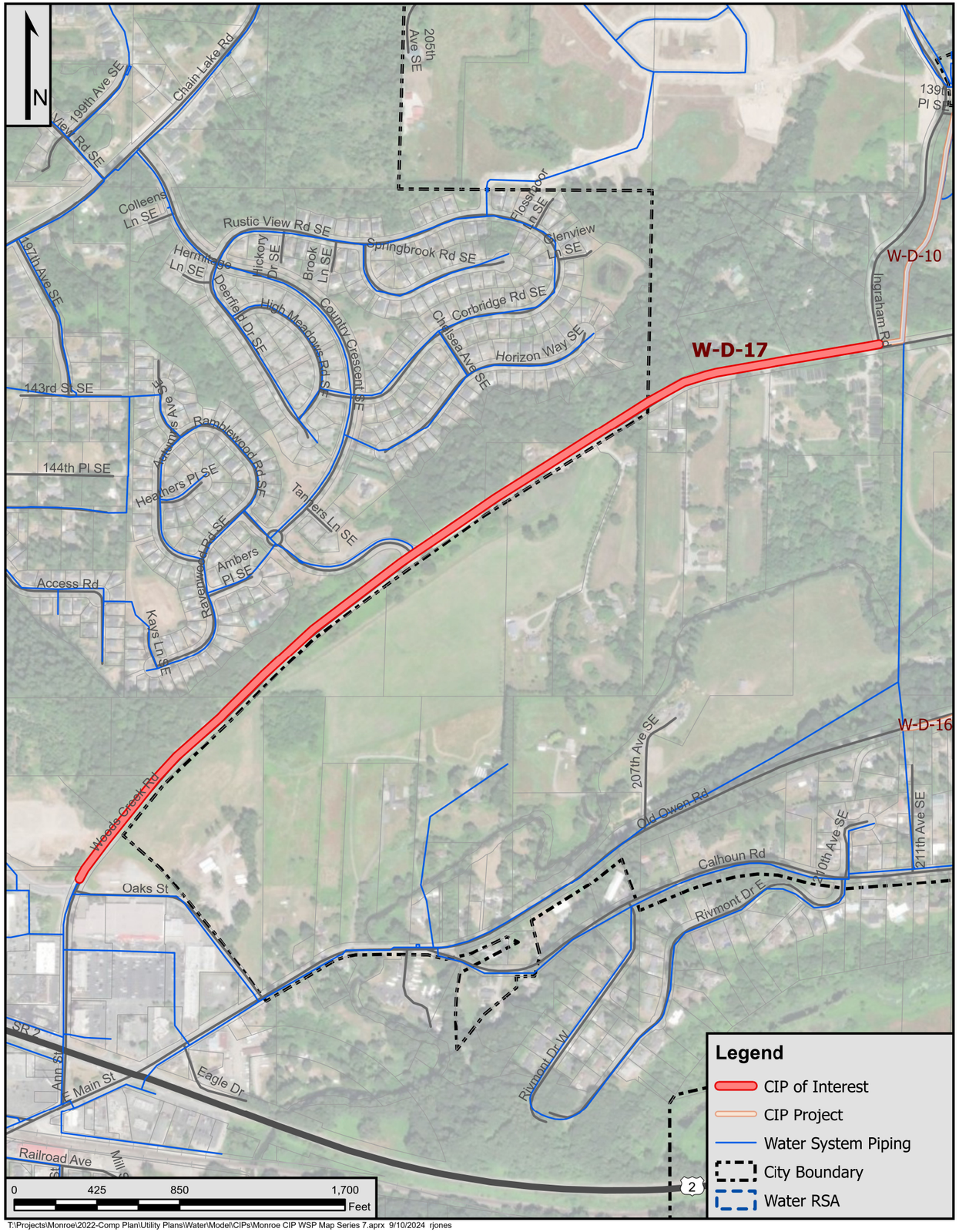

T:\Projects\Monroe\2022-Comp Plan\Utility Plans\Water\Model\CIPs\Monroe CIP WSP Map Series 7.aprx 9/10/2024 rjones

City of Monroe Utility Plan Update - Water

Project Name: W-D-17

Project Information

Project Description:
Woods Creek Road - Tjerne to Ingraham Rd; 6-year, Priority A
Existing: 10-inch, DI
Proposed: 12-inch, DI

Project Duration:	2028 - 2029	**Length of Pipe (ft):**	5,100 ft
Special Considerations:		**Project Location:**	Replace Piping from the intersection of Ingraham Rd west along Woods Creek Rd to the Woods Creek PRV Station

Estimated Cost Breakdown

Total Opinion of Probable Project Cost	$ 2,110,000

Assumptions:

Total Opinion of Probably Project Cost is rounded up to the nearest $10,000 and presented as 2024 dollars. To escalate to future dollars: from 2024 for the first 6 years of the Capital Improvement Program an inflation factor of 3.0% is utilized, and for years 7 to 20, an inflation factor of 2.4% is utilized.

City Notes:

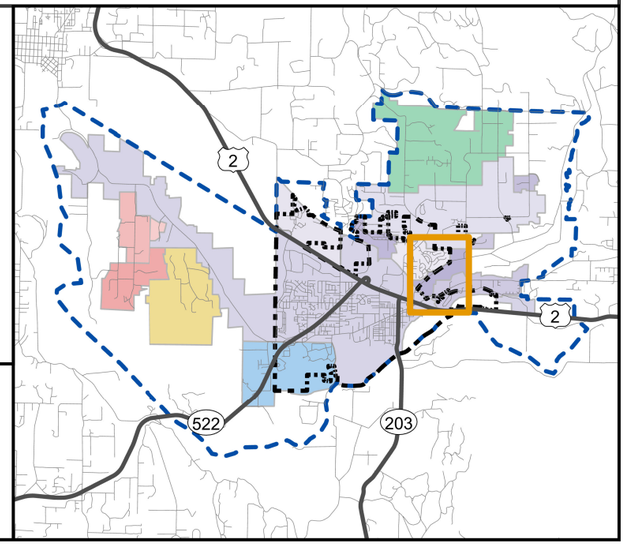

bhc CONSULTANTS
September 2024

Credits: Maxar

Water System: City of Monroe 2023 and 2024

Snohomish County base data 2023

Data sources supplied may not reflect current or actual conditions. This map is a geographic representation based on information available. It does not represent survey data. No warranty is made concerning the accuracy, currency, or completeness of data depicted on this map. BHC Consultants LLC., assumes no responsibility for the validity of any information presented herein, nor any responsibility for the use or misuse of the data.

COPYRIGHT © 2024 BHC CONSULTANTS LLC., ALL RIGHTS RESERVED

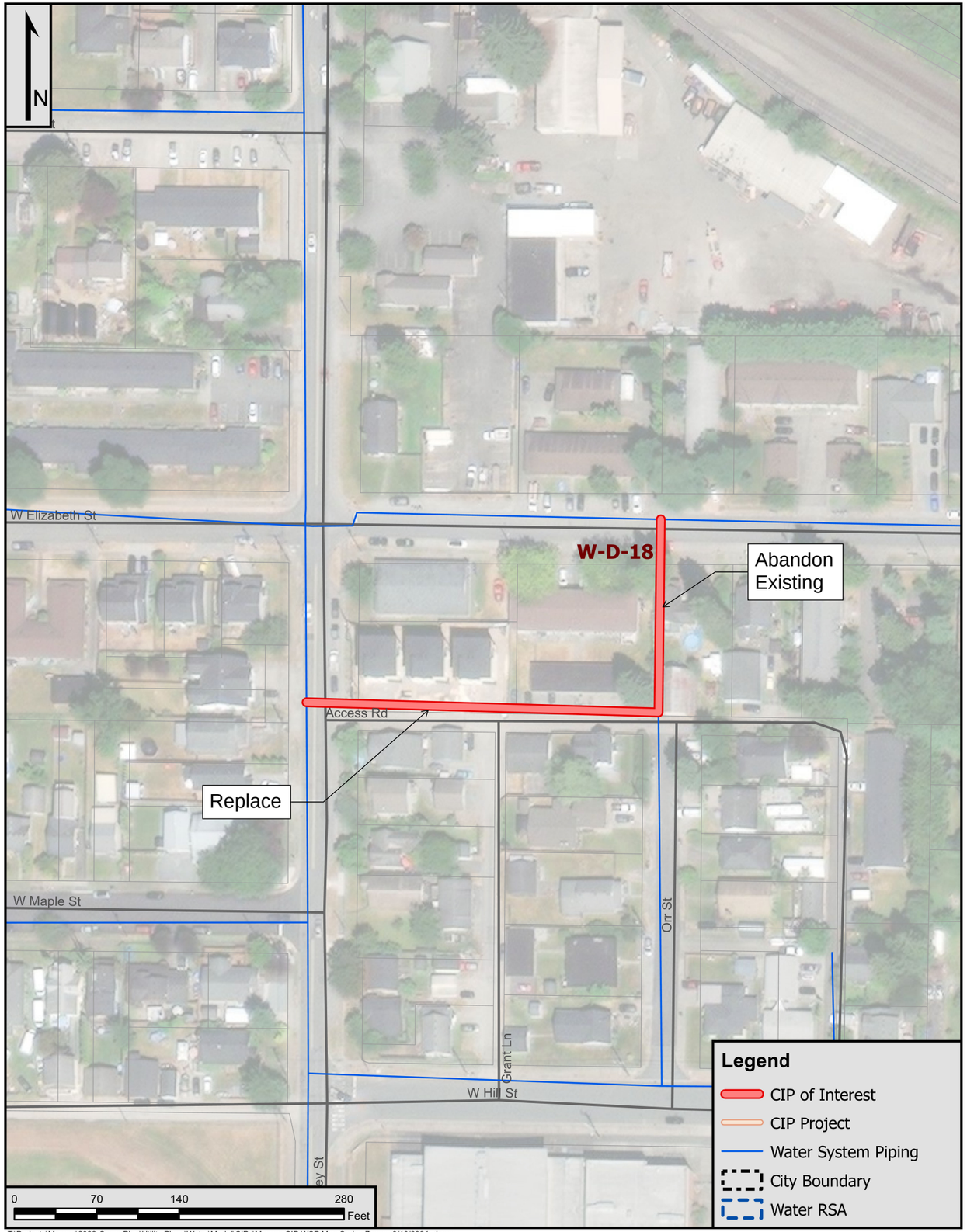

T:\Projects\Monroe\2022-Comp Plan\Utility Plans\Water\Model\CIPs\Monroe CIP WSP Map Series 7.aprx 9/10/2024 rjones

City of Monroe Utility Plan Update - Water

Project Name: W-D-18

Project Information

Project Description:
Orr to Kelsey abandon line under houses; 6-year, Priority A
Existing: 4-inch, 8-inch, AC, DI
Proposed: 8-inch, 12-inch, DI

Project Duration:	2028 - 2029	**Length of Pipe (ft):**	500 ft

Special Considerations:
Project will abandon the north-south piping, and install east - west piping

Project Location:
Piping along Orr street and alley connecting to Kelsey St

Estimated Cost Breakdown

Total Opinion of Probable Project Cost	$ 120,000

Assumptions:

Total Opinion of Probably Project Cost is rounded up to the nearest $10,000 and presented as 2024 dollars. To escalate to future dollars: from 2024 for the first 6 years of the Capital Improvement Program an inflation factor of 3.0% is utilized, and for years 7 to 20, an inflation factor of 2.4% is utilized.

City Notes:

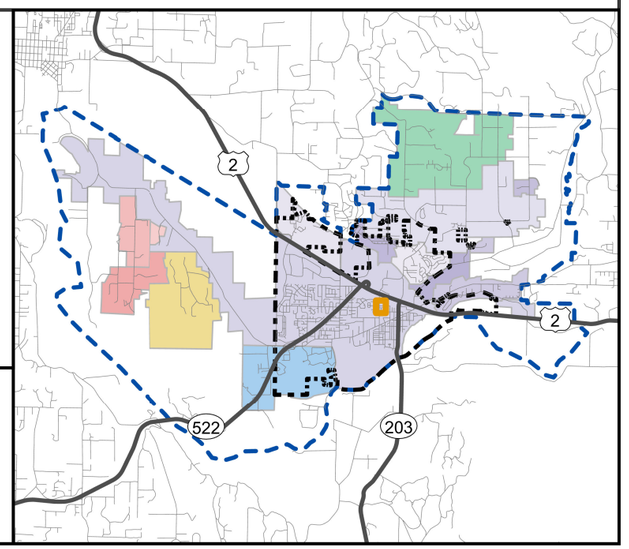

bhc CONSULTANTS
September 2024

Credits: Maxar

Water System: City of Monroe 2023 and 2024

Snohomish County base data 2023

Data sources supplied may not reflect current or actual conditions. This map is a geographic representation based on information available. It does not represent survey data. No warranty is made concerning the accuracy, currency, or completeness of data depicted on this map. BHC Consultants LLC., assumes no responsibility for the validity of any information presented herein, nor any responsibility for the use or misuse of the data.

COPYRIGHT © 2024 BHC CONSULTANTS LLC., ALL RIGHTS RESERVED

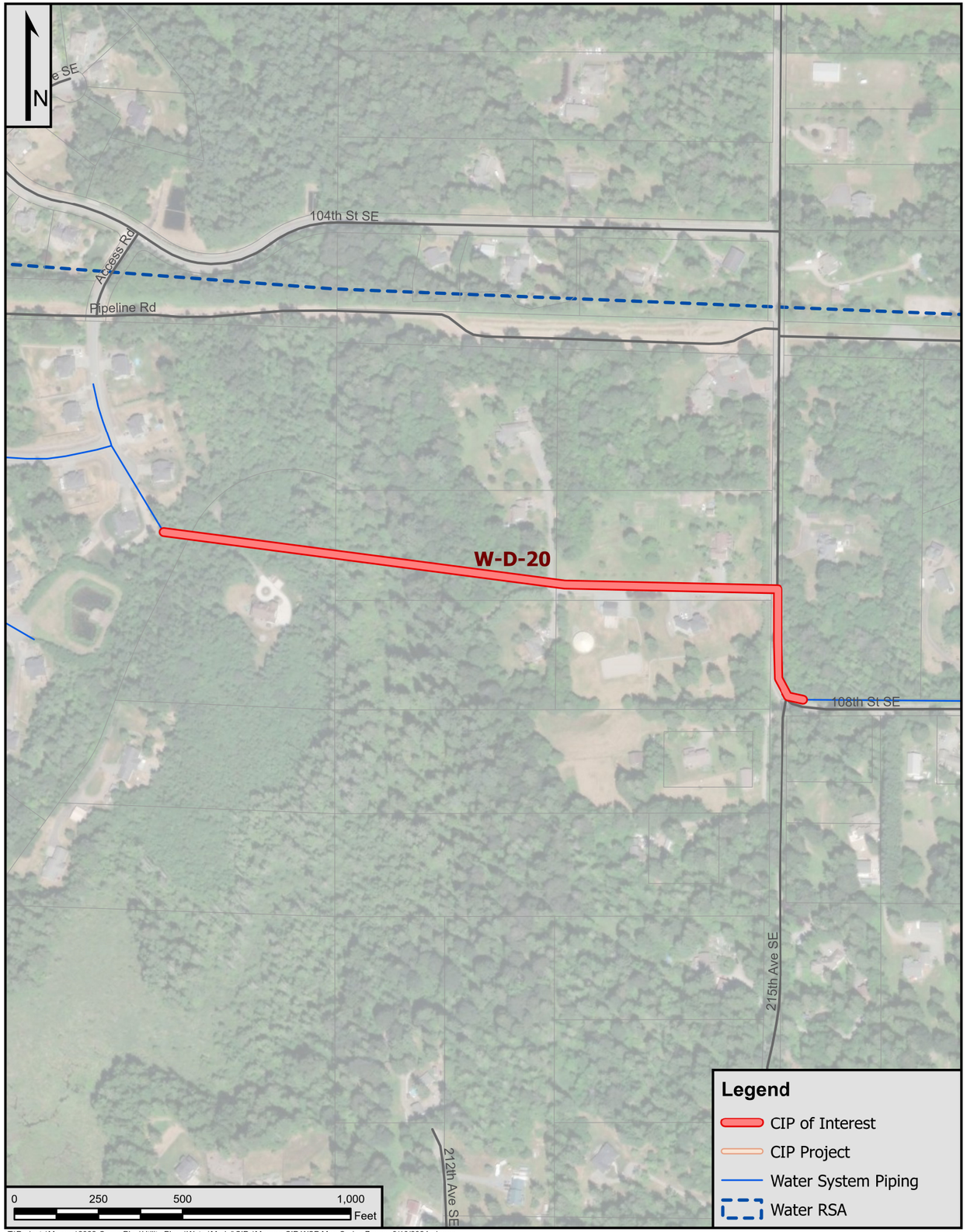

T:\Projects\Monroe\2022-Comp Plan\Utility Plans\Water\Model\CIPs\Monroe CIP WSP Map Series 7.aprx 9/10/2024 rjones

City of Monroe Utility Plan Update - Water

Project Name: W-D-20

Project Information

Project Description:
North Hill 116th SE and 227th SE; connect to Wagner 517; 6-year, Priority A
Existing: None,
Proposed: 8-inch, DI

Project Duration:	2028 - 2029	**Length of Pipe (ft):**	2,300 ft

Special Considerations:

These disconnected segments have a steep elevation difference.

Project Location:

Piping to extend from the intersection of 209th Ave SE and 107th St SE east to 215th Ave SE and 108th St SE

Estimated Cost Breakdown

Total Opinion of Probable Project Cost	$ 2,610,000

Assumptions:

Total Opinion of Probably Project Cost is rounded up to the nearest $10,000 and presented as 2024 dollars. To escalate to future dollars: from 2024 for the first 6 years of the Capital Improvement Program an inflation factor of 3.0% is utilized, and for years 7 to 20, an inflation factor of 2.4% is utilized.

City Notes:

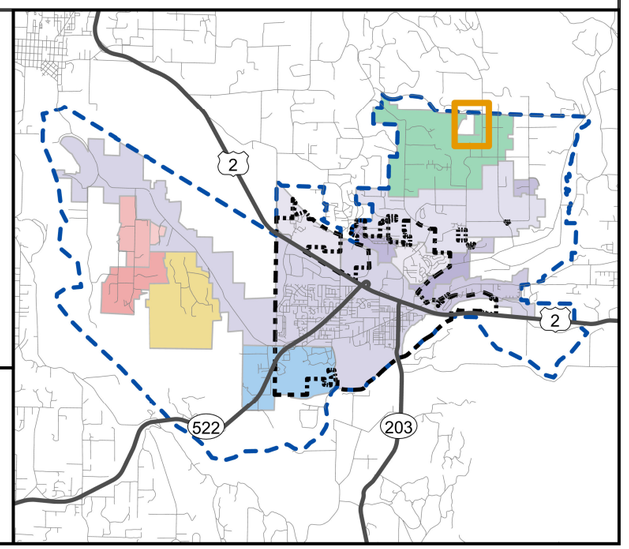

bhc CONSULTANTS
September 2024

Credits: Maxar

Water System: City of Monroe 2023 and 2024

Snohomish County base data 2023

Data sources supplied may not reflect current or actual conditions. This map is a geographic representation based on information available. It does not represent survey data. No warranty is made concerning the accuracy, currency, or completeness of data depicted on this map. BHC Consultants LLC., assumes no responsibility for the validity of any information presented herein, nor any responsibility for the use or misuse of the data.

COPYRIGHT © 2024 BHC CONSULTANTS LLC., ALL RIGHTS RESERVED

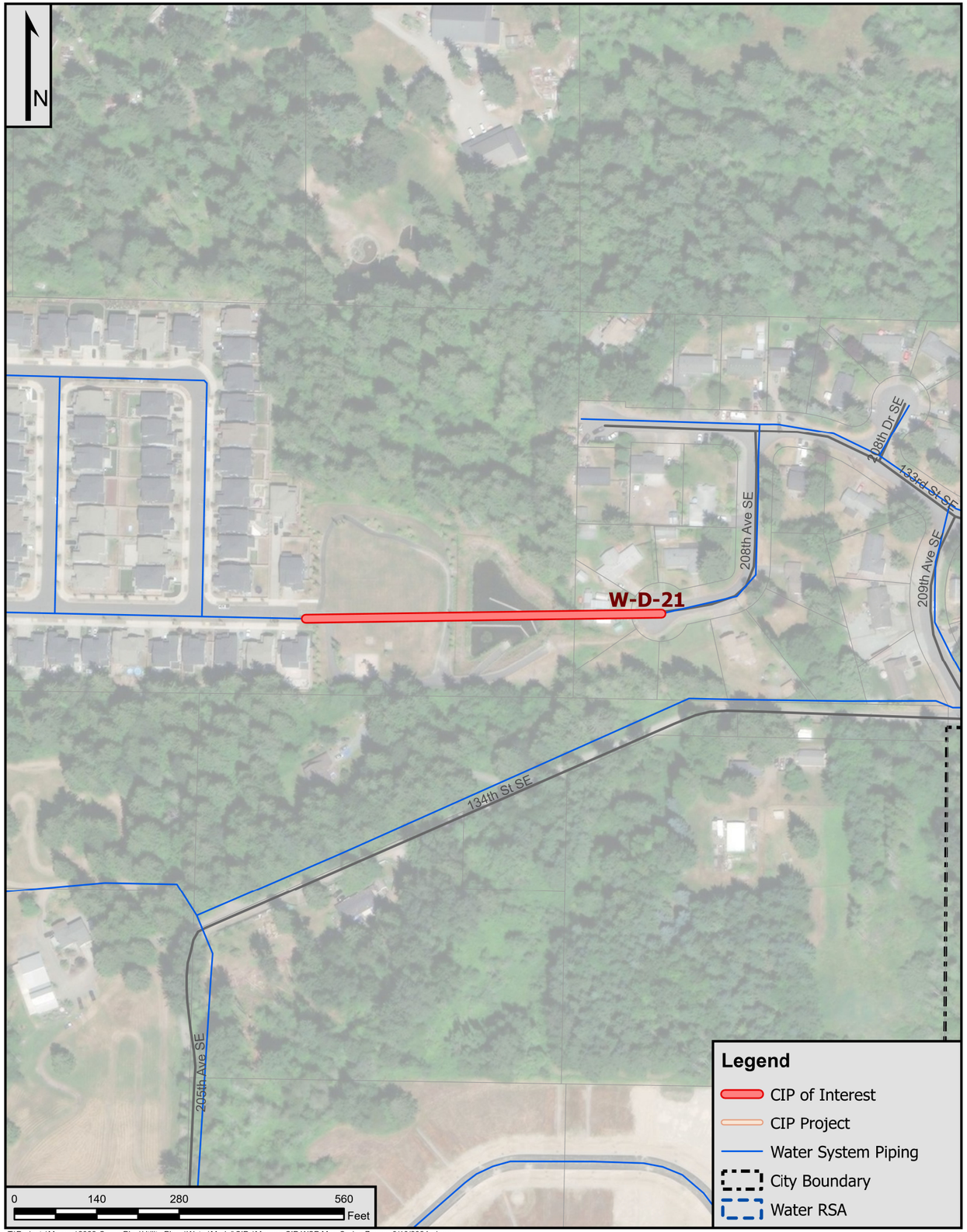

T:\Projects\Monroe\2022-Comp Plan\Utility Plans\Water\Model\CIPs\Monroe CIP WSP Map Series 7.aprx 9/10/2024 rjones

City of Monroe Utility Plan Update - Water

Project Name: W-D-21

Project Information

Project Description:
Easton Cove to Graden Water loop; 6-year, Priority A
Existing: None,
Proposed: 8-inch, DI

Project Duration:	2029 - 2030	**Length of Pipe (ft):**	700 ft
Special Considerations:		**Project Location:**	Piping to connect dead end along 208th Ave SE west to 13th St SE

Estimated Cost Breakdown

Total Opinion of Probable Project Cost	$ 360,000

Assumptions:

Total Opinion of Probably Project Cost is rounded up to the nearest $10,000 and presented as 2024 dollars. To escalate to future dollars: from 2024 for the first 6 years of the Capital Improvement Program an inflation factor of 3.0% is utilized, and for years 7 to 20, an inflation factor of 2.4% is utilized.

City Notes:

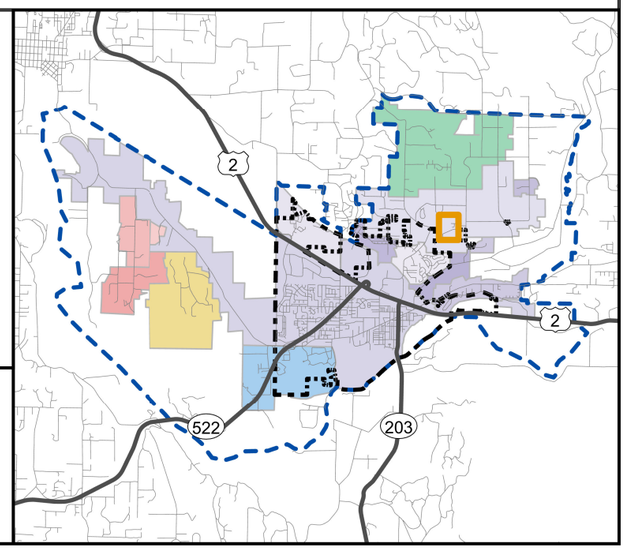

bhc CONSULTANTS
September 2024

Credits: Maxar

Water System: City of Monroe 2023 and 2024

Snohomish County base data 2023

Data sources supplied may not reflect current or actual conditions. This map is a geographic representation based on information available. It does not represent survey data. No warranty is made concerning the accuracy, currency, or completeness of data depicted on this map. BHC Consultants LLC., assumes no responsibility for the validity of any information presented herein, nor any responsibility for the use or misuse of the data.

COPYRIGHT © 2024 BHC CONSULTANTS LLC., ALL RIGHTS RESERVED

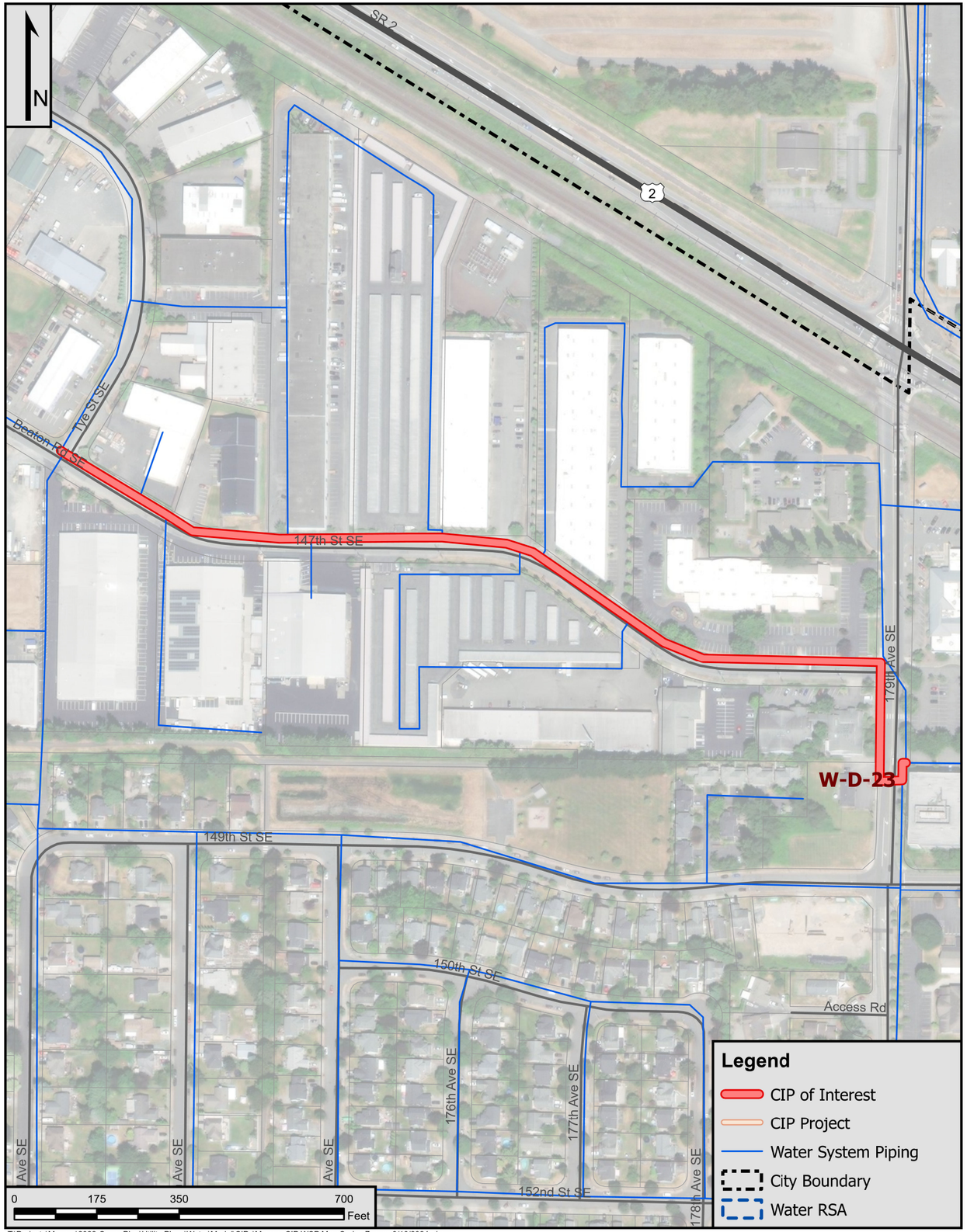

T:\Projects\Monroe\2022-Comp Plan\Utility Plans\Water\Model\CIPs\Monroe CIP WSP Map Series 7.aprx 9/10/2024 rjones

City of Monroe Utility Plan Update - Water

Project Name: W-D-23

Project Information

Project Description:
1467th St SE Replacement; 7-15 year, Priority C
Existing: 8-inch, AC, DI
Proposed: 12-inch, DI

Project Duration:	2035-2036	**Length of Pipe (ft):**	2,300 ft
Special Considerations:	Industrial Zoning	**Project Location:**	Piping from Tye St SE east to 179th Ave SE along 147th St SE

Estimated Cost Breakdown

Total Opinion of Probable Project Cost	$ 1,840,000

Assumptions:

Total Opinion of Probably Project Cost is rounded up to the nearest $10,000 and presented as 2024 dollars. To escalate to future dollars: from 2024 for the first 6 years of the Capital Improvement Program an inflation factor of 3.0% is utilized, and for years 7 to 20, an inflation factor of 2.4% is utilized.

City Notes:

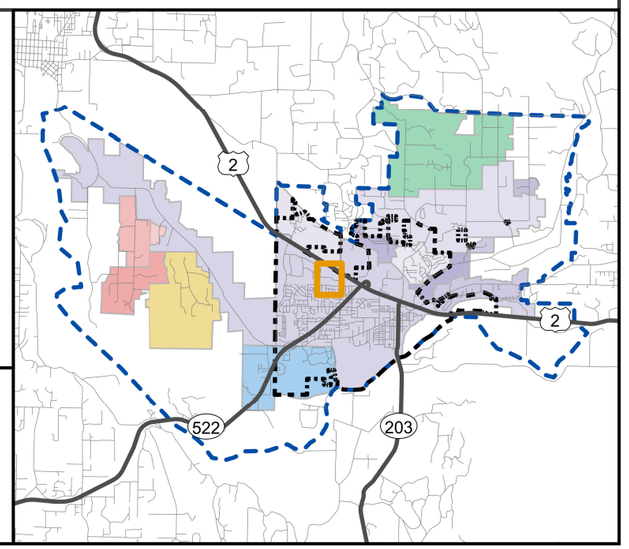

bhc CONSULTANTS
September 2024

Credits: Maxar

Water System: City of Monroe 2023 and 2024

Snohomish County base data 2023

Data sources supplied may not reflect current or actual conditions. This map is a geographic representation based on information available. It does not represent survey data. No warranty is made concerning the accuracy, currency, or completeness of data depicted on this map. BHC Consultants LLC., assumes no responsibility for the validity of any information presented herein, nor any responsibility for the use or misuse of the data.

COPYRIGHT © 2024 BHC CONSULTANTS LLC., ALL RIGHTS RESERVED

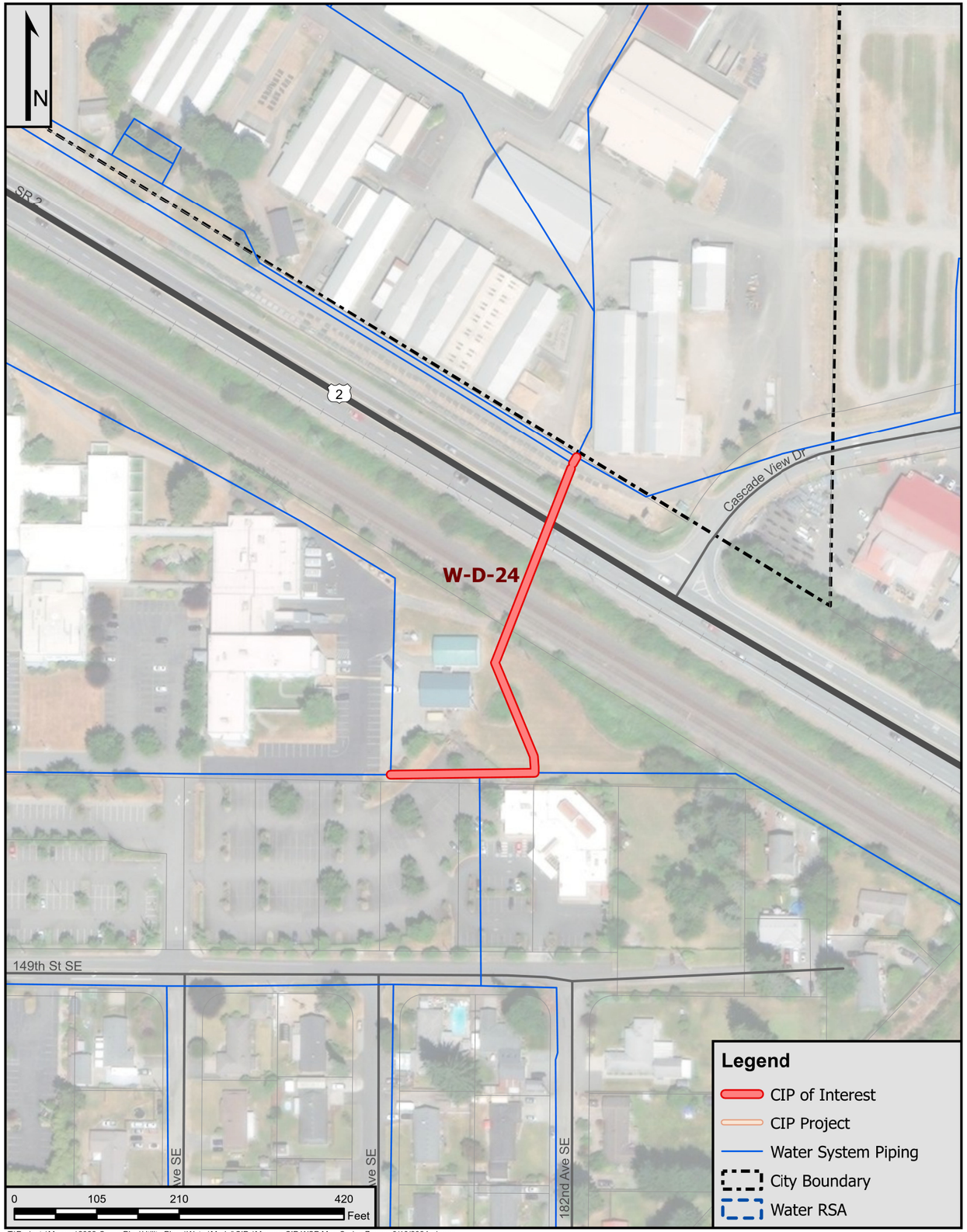

T:\Projects\Monroe\2022-Comp Plan\Utility Plans\Water\Model\CIPs\Monroe CIP WSP Map Series 7.aprx 9/10/2024 rjones

City of Monroe Utility Plan Update - Water

Project Name: W-D-24

Project Information

Project Description:
Replacement to the Southeast of the Fairgrounds PRV Station; 7-15 year, Priority B
Existing: 10-inch, 12-inch, CI, DI, PVC, UNK
Proposed: 16-inch, DI

Project Duration:	2031-2032	**Length of Pipe (ft):**	700 ft

Special Considerations:
Crosses under US 2, microtunneling considerations

Project Location:
Connects transmission main from near the North side of the intersection of Cascade View Dr and US 2 south to business park

Estimated Cost Breakdown

Total Opinion of Probable Project Cost	$ 560,000

Assumptions:
Total Opinion of Probably Project Cost is rounded up to the nearest $10,000 and presented as 2024 dollars. To escalate to future dollars: from 2024 for the first 6 years of the Capital Improvement Program an inflation factor of 3.0% is utilized, and for years 7 to 20, an inflation factor of 2.4% is utilized.

City Notes:

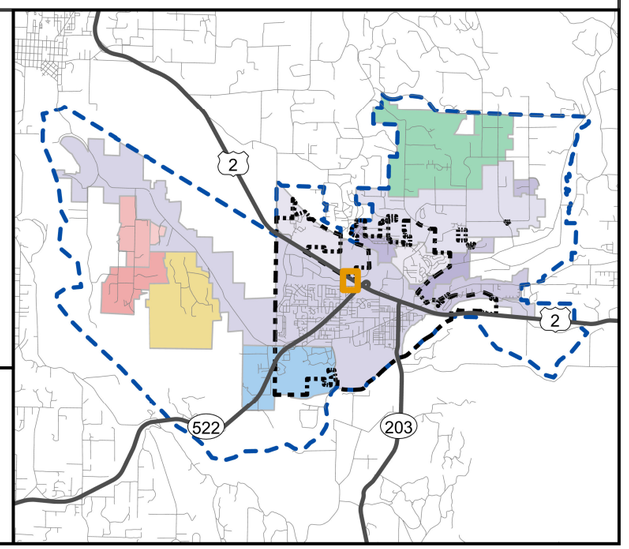

September 2024

Credits: Maxar

Water System: City of Monroe 2023 and 2024

Snohomish County base data 2023

Data sources supplied may not reflect current or actual conditions. This map is a geographic representation based on information available. It does not represent survey data. No warranty is made concerning the accuracy, currency, or completeness of data depicted on this map. BHC Consultants LLC., assumes no responsibility for the validity of any information presented herein, nor any responsibility for the use or misuse of the data.

COPYRIGHT © 2024 BHC CONSULTANTS LLC., ALL RIGHTS RESERVED

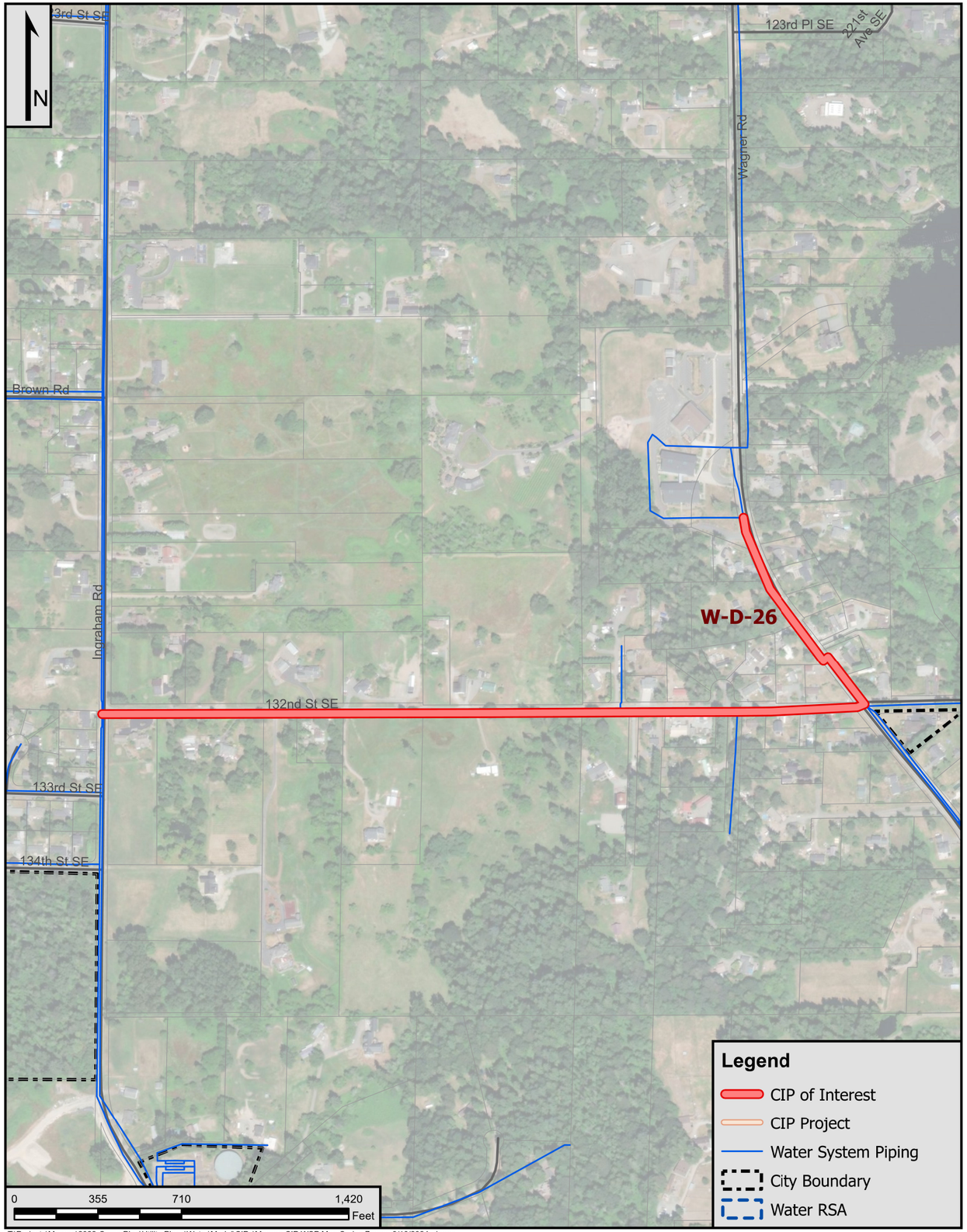

T:\Projects\Monroe\2022-Comp Plan\Utility Plans\Water\Model\CIPs\Monroe CIP WSP Map Series 7.aprx 9/10/2024 rjones

City of Monroe Utility Plan Update - Water

Project Name: W-D-26

Project Information

Project Description:
Salem Woods Elementary School Replacement; 7-15 year, Priority B
Existing: 6-inch, 8-inch, AC, DI
Proposed: 8-inch, 12-inch, DI

Project Duration:	2035-2036	**Length of Pipe (ft):**	4,300 ft

Special Considerations:
Reassess the Wagner South PRV Station set points as part of this design

Project Location:
Piping along 132nd St SE from Ingraham Rd east to Wagner Rd, and along Wagner road from 132nd St SE north to Salem Woods Elementary

Estimated Cost Breakdown

Total Opinion of Probable Project Cost	$ 3,440,000

Assumptions:
Total Opinion of Probably Project Cost is rounded up to the nearest $10,000 and presented as 2024 dollars. To escalate to future dollars: from 2024 for the first 6 years of the Capital Improvement Program an inflation factor of 3.0% is utilized, and for years 7 to 20, an inflation factor of 2.4% is utilized.

City Notes:

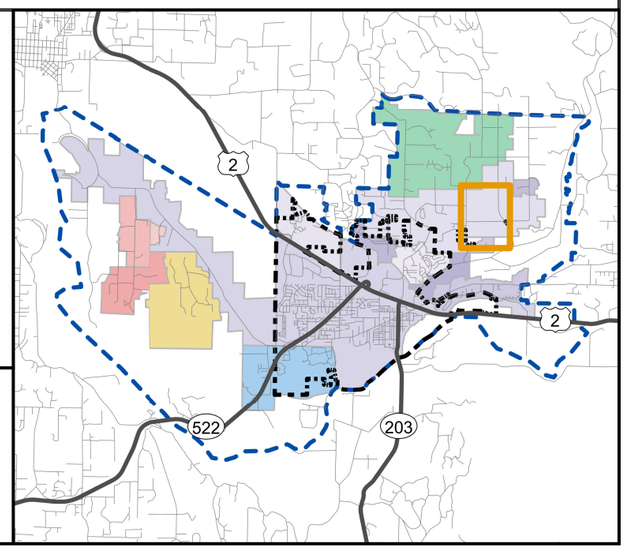

bhc CONSULTANTS
September 2024

Credits: Maxar

Water System: City of Monroe 2023 and 2024

Snohomish County base data 2023

Data sources supplied may not reflect current or actual conditions. This map is a geographic representation based on information available. It does not represent survey data. No warranty is made concerning the accuracy, currency, or completeness of data depicted on this map. BHC Consultants LLC., assumes no responsibility for the validity of any information presented herein, nor any responsibility for the use or misuse of the data.

COPYRIGHT © 2024 BHC CONSULTANTS LLC., ALL RIGHTS RESERVED

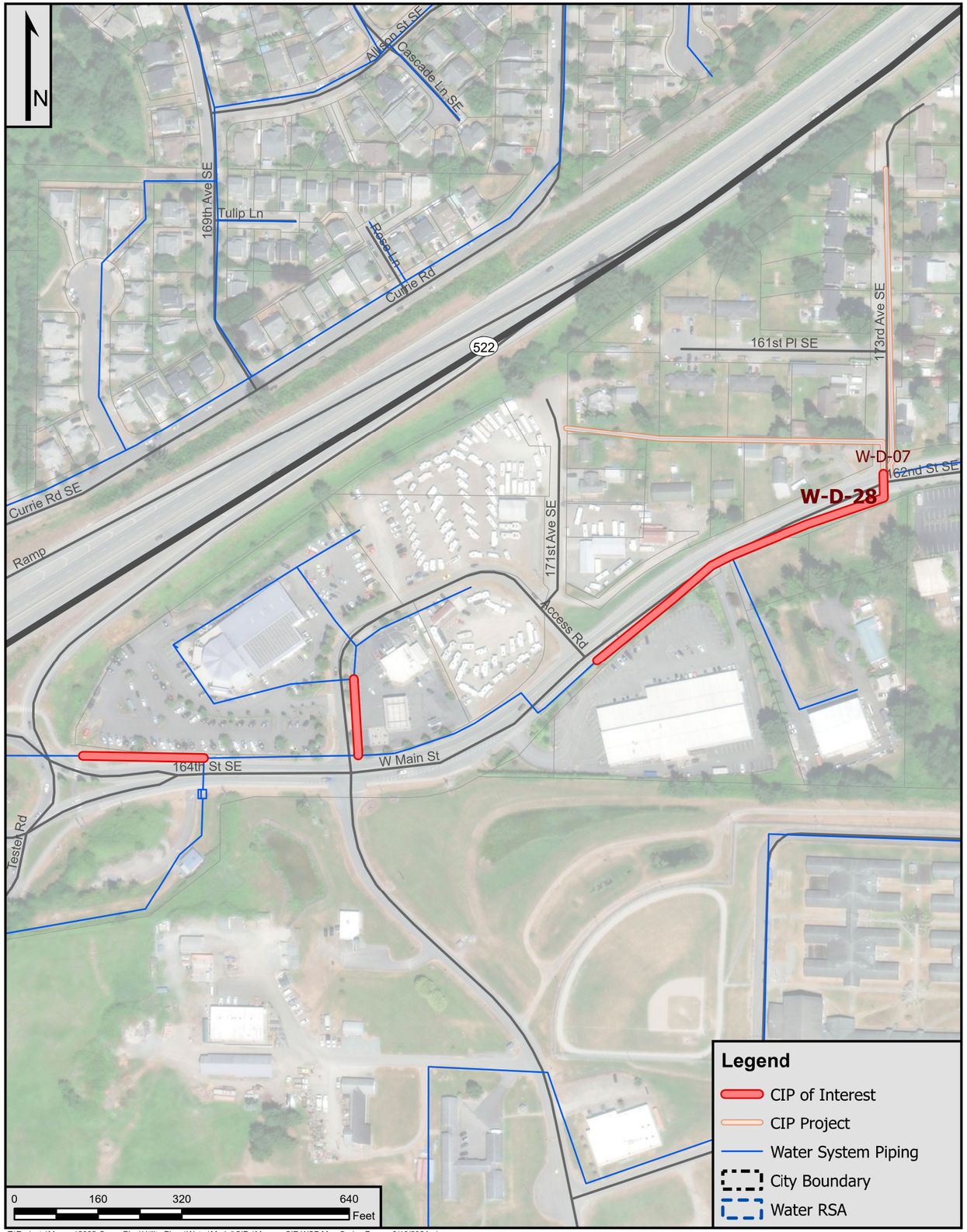

T:\Projects\Monroe\2022-Comp Plan\Utility Plans\Water\Model\CIPs\Monroe CIP WSP Map Series 7.aprx 9/10/2024 rjones

City of Monroe Utility Plan Update - Water

Project Name: W-D-28

Project Information

Project Description:
West Main St improvements to supply commercial fire flow; 7-15 year, Priority B
Existing: 10-inch, 8-inch, AC, DI, PVC
Proposed: 12-inch, DI

Project Duration:	2037	**Length of Pipe (ft):**	1,100 ft
Special Considerations:		**Project Location:**	Some piping along W Main St between Tester Rd and 173rd Dr SE. City owned piping along 170th Dr north ow W Main St.

Estimated Cost Breakdown

Total Opinion of Probable Project Cost	$ 880,000

Assumptions:

Total Opinion of Probably Project Cost is rounded up to the nearest $10,000 and presented as 2024 dollars. To escalate to future dollars: from 2024 for the first 6 years of the Capital Improvement Program an inflation factor of 3.0% is utilized, and for years 7 to 20, an inflation factor of 2.4% is utilized.

City Notes:

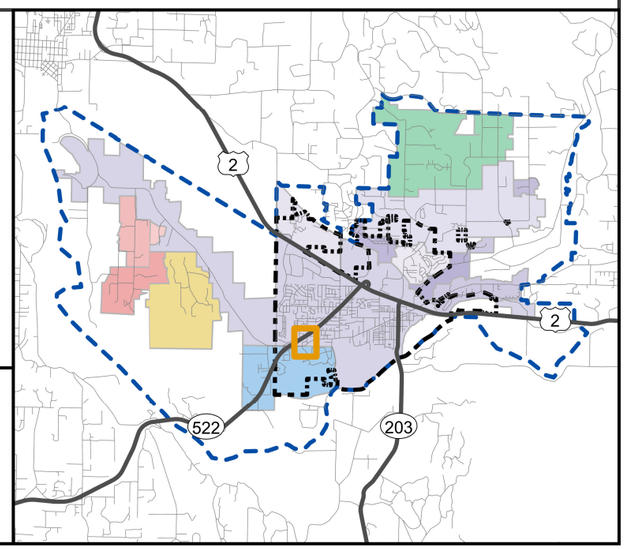

bhc CONSULTANTS
September 2024

Credits: Maxar

Water System: City of Monroe 2023 and 2024

Snohomish County base data 2023

Data sources supplied may not reflect current or actual conditions. This map is a geographic representation based on information available. It does not represent survey data. No warranty is made concerning the accuracy, currency, or completeness of data depicted on this map. BHC Consultants LLC., assumes no responsibility for the validity of any information presented herein, nor any responsibility for the use or misuse of the data.

COPYRIGHT © 2024 BHC CONSULTANTS LLC., ALL RIGHTS RESERVED

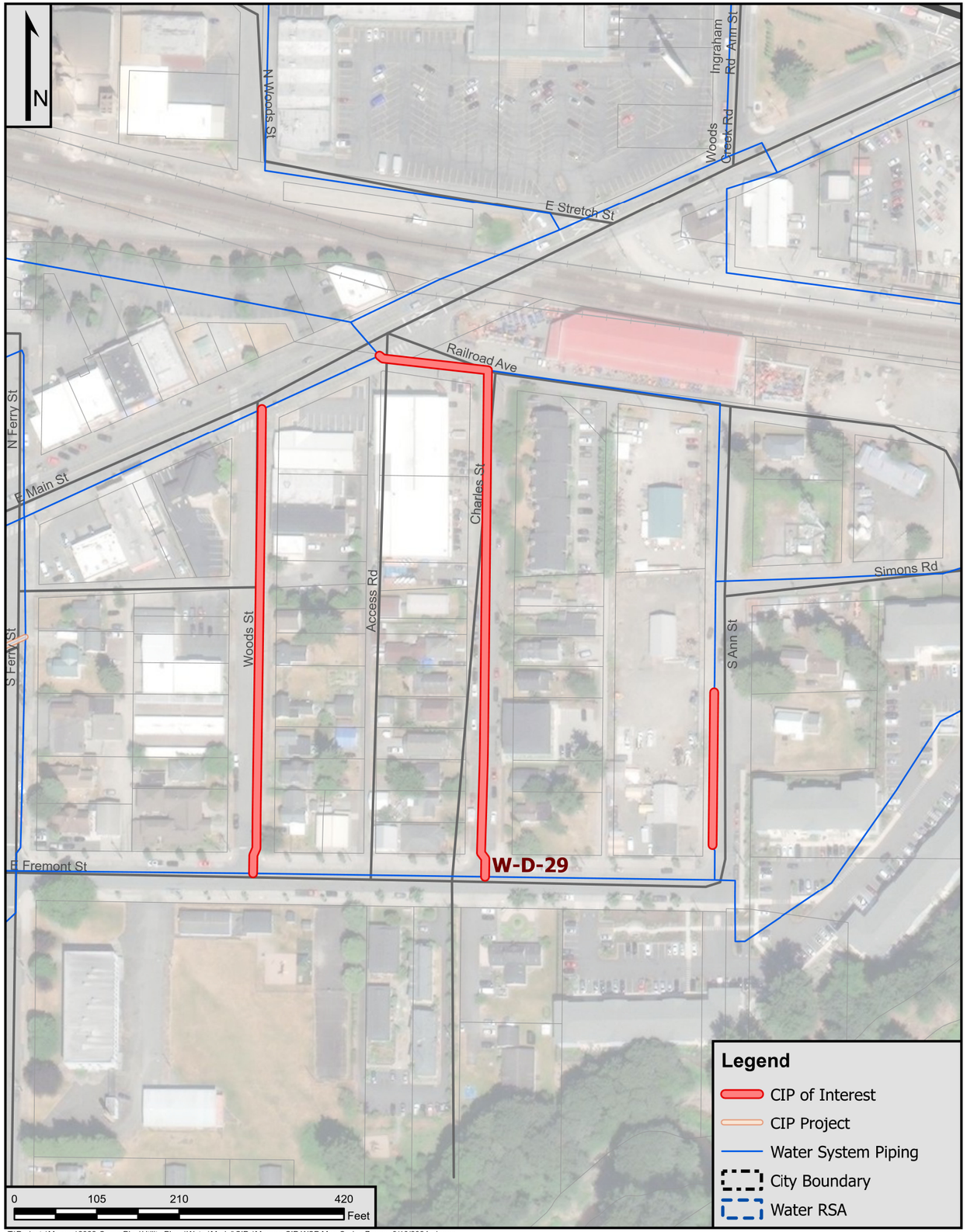

T:\Projects\Monroe\2022-Comp Plan\Utility Plans\Water\Model\CIPs\Monroe CIP WSP Map Series 7.aprx 9/10/2024 rjones

City of Monroe Utility Plan Update - Water

Project Name: W-D-29

Project Information

Project Description:
E Main St and Railroad Ave replacement; 7-15 year, Priority B
Existing: 4-inch, 6-inch, 8-inch, AC
Proposed: 8-inch, DI

Project Duration:	2033-2034	**Length of Pipe (ft):**	1,600 ft
Special Considerations:		**Project Location:**	Piping between E Fremont St and the Railroad Ave along N Woods St and Charles St. Piping along S Ann St from E Fremont St north to Simons Rd

Estimated Cost Breakdown

Total Opinion of Probable Project Cost	$ 1,280,000

Assumptions:

Total Opinion of Probably Project Cost is rounded up to the nearest $10,000 and presented as 2024 dollars. To escalate to future dollars: from 2024 for the first 6 years of the Capital Improvement Program an inflation factor of 3.0% is utilized, and for years 7 to 20, an inflation factor of 2.4% is utilized.

City Notes:

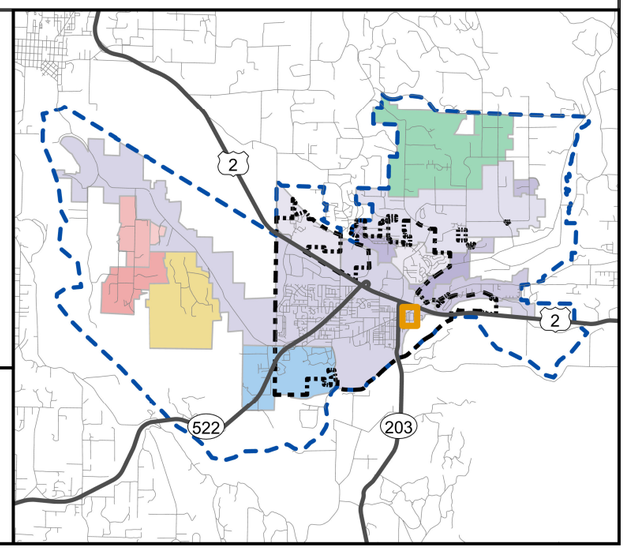

CONSULTANTS
September 2024

Credits: Maxar

Water System: City of Monroe 2023 and 2024

Snohomish County base data 2023

Data sources supplied may not reflect current or actual conditions. This map is a geographic representation based on information available. It does not represent survey data. No warranty is made concerning the accuracy, currency, or completeness of data depicted on this map. BHC Consultants LLC., assumes no responsibility for the validity of any information presented herein, nor any responsibility for the use or misuse of the data.

COPYRIGHT © 2024 BHC CONSULTANTS LLC., ALL RIGHTS RESERVED

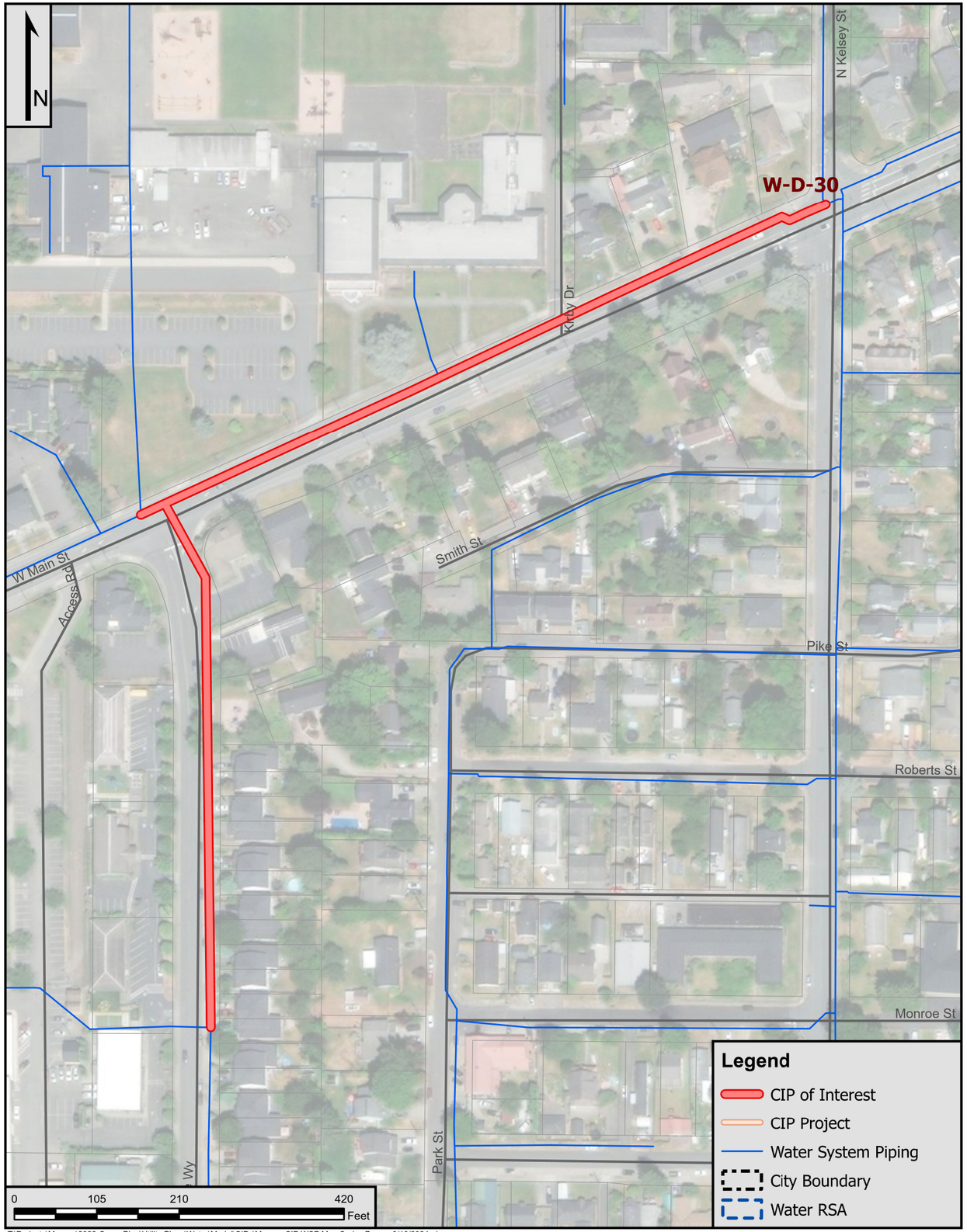

T:\Projects\Monroe\2022-Comp Plan\Utility Plans\Water\Model\CIPs\Monroe CIP WSP Map Series 7.aprx 9/10/2024 rjones

City of Monroe Utility Plan Update - Water

Project Name: W-D-30

Project Information

Project Description:
Village Way and W Main St Replacement; 7-15 year, Priority C
Existing: 8-inch, AC, DI
Proposed: 12-inch, DI

Project Duration:	2038	**Length of Pipe (ft):**	1,700 ft
Special Considerations:		**Project Location:**	Piping along W Main St from Kelsey St southwest to Village Way with additional piping extending south along Village Way

Estimated Cost Breakdown

Total Opinion of Probable Project Cost	$ 1,360,000

Assumptions:

Total Opinion of Probably Project Cost is rounded up to the nearest $10,000 and presented as 2024 dollars. To escalate to future dollars: from 2024 for the first 6 years of the Capital Improvement Program an inflation factor of 3.0% is utilized, and for years 7 to 20, an inflation factor of 2.4% is utilized.

City Notes:

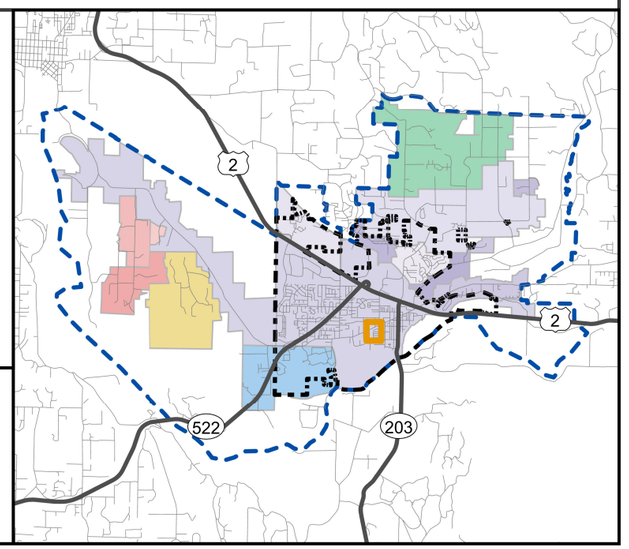

bhc CONSULTANTS
September 2024

Credits: Maxar

Water System: City of Monroe 2023 and 2024

Snohomish County base data 2023

Data sources supplied may not reflect current or actual conditions. This map is a geographic representation based on information available. It does not represent survey data. No warranty is made concerning the accuracy, currency, or completeness of data depicted on this map. BHC Consultants LLC., assumes no responsibility for the validity of any information presented herein, nor any responsibility for the use or misuse of the data.

COPYRIGHT © 2024 BHC CONSULTANTS LLC., ALL RIGHTS RESERVED

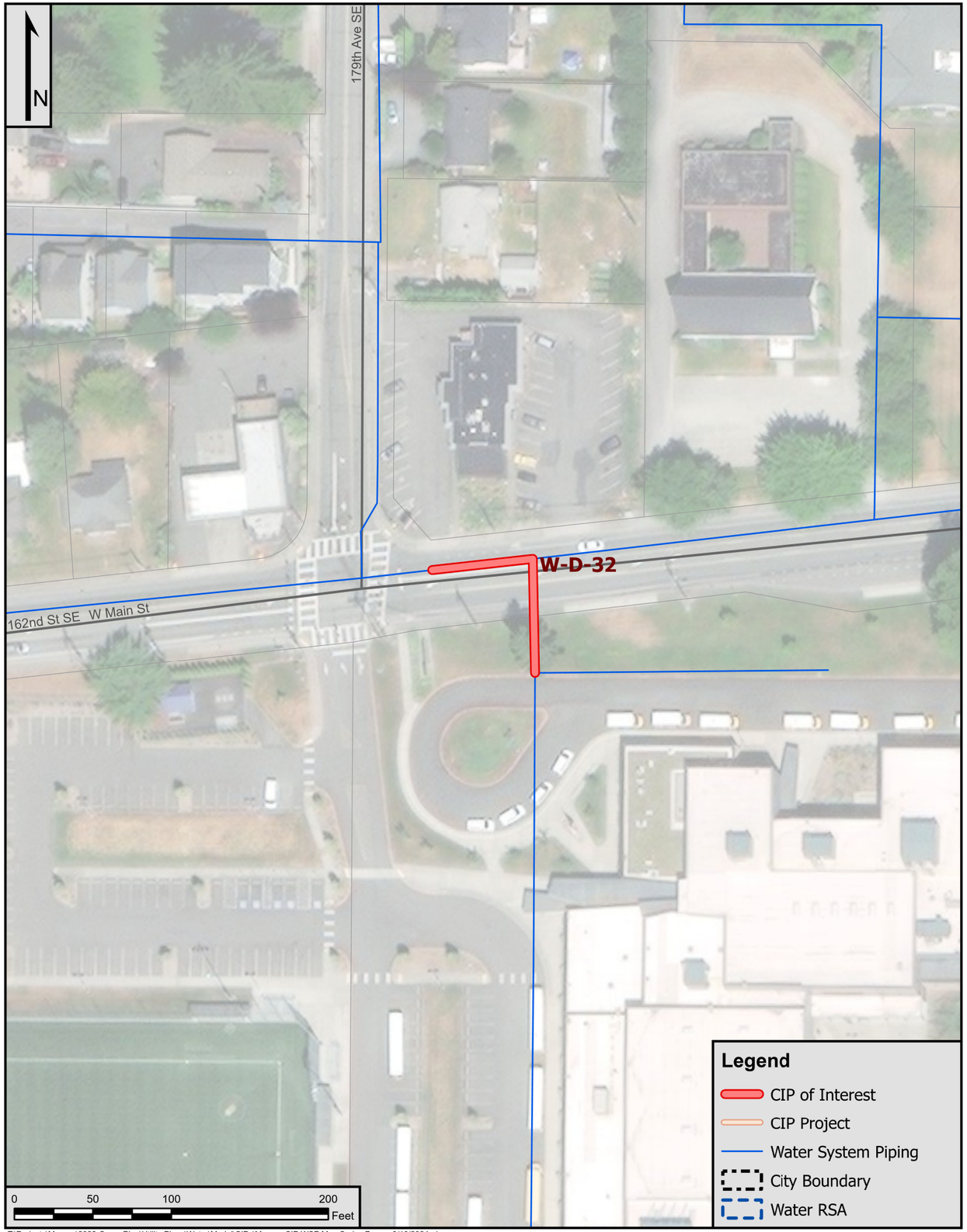

T:\Projects\Monroe\2022-Comp Plan\Utility Plans\Water\Model\CIPs\Monroe CIP WSP Map Series 7.aprx 9/10/2024 rjones

City of Monroe Utility Plan Update - Water

Project Name: W-D-32

Project Information

Project Description:
W Main and 179th Ave SE Replacement; 7-15 year, Priority B
Existing: 8-inch, DI, PVC
Proposed: 12-inch, DI

Project Duration:	2032	**Length of Pipe (ft):**	200 ft
Special Considerations:		**Project Location:**	East of 179th Ave SE and West Main St near Park Place Middle School

Estimated Cost Breakdown

Total Opinion of Probable Project Cost	$ 160,000

Assumptions:

Total Opinion of Probably Project Cost is rounded up to the nearest $10,000 and presented as 2024 dollars. To escalate to future dollars: from 2024 for the first 6 years of the Capital Improvement Program an inflation factor of 3.0% is utilized, and for years 7 to 20, an inflation factor of 2.4% is utilized.

City Notes:

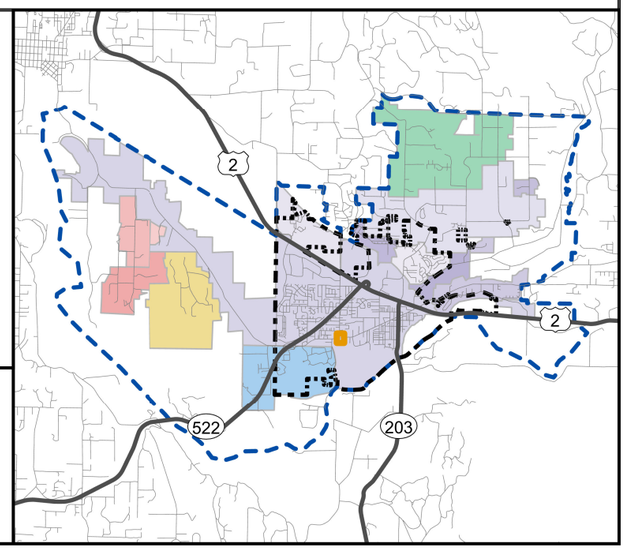

bhc CONSULTANTS
September 2024

Credits: Maxar

Water System: City of Monroe 2023 and 2024

Snohomish County base data 2023

Data sources supplied may not reflect current or actual conditions. This map is a geographic representation based on information available. It does not represent survey data. No warranty is made concerning the accuracy, currency, or completeness of data depicted on this map. BHC Consultants LLC., assumes no responsibility for the validity of any information presented herein, nor any responsibility for the use or misuse of the data.

COPYRIGHT © 2024 BHC CONSULTANTS LLC., ALL RIGHTS RESERVED

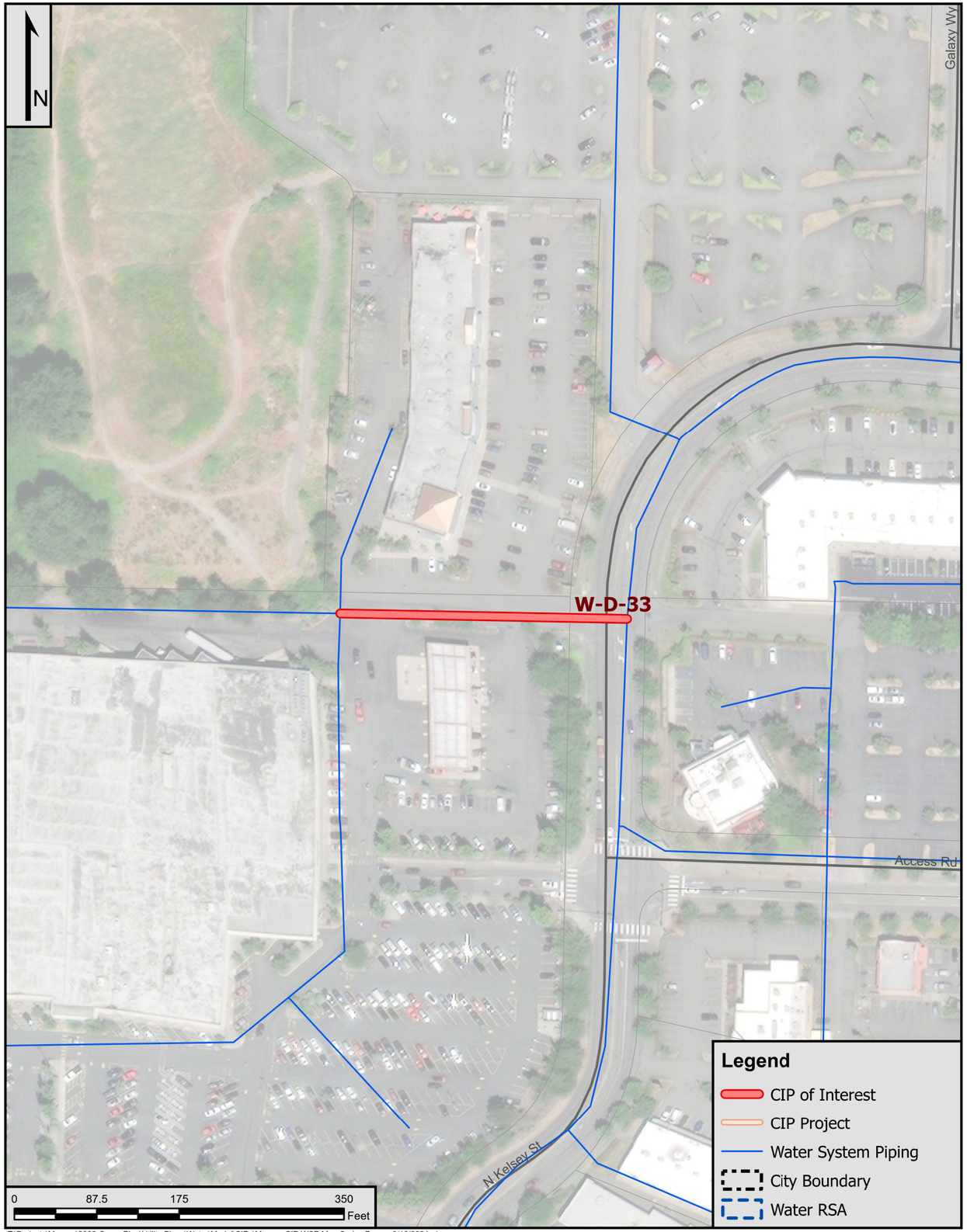

T:\Projects\Monroe\2022-Comp Plan\Utility Plans\Water\Model\CIPs\Monroe CIP WSP Map Series 7.aprx 9/10/2024 rjones

City of Monroe Utility Plan Update - Water

Project Name: W-D-33

Project Information

Project Description:
Tjerne Pl SE replacement; 7-15 year, Priority C
Existing: 8-inch, PVC
Proposed: 12-inch, DI

Project Duration:	2039	**Length of Pipe (ft):**	400 ft

Special Considerations:
This piping may be privately owned and may in part not be the responsibility of the City.

Project Location:
Piping along Tjerne Pl SE west of N Kelsey St

Estimated Cost Breakdown

Total Opinion of Probable Project Cost	$ 320,000

Assumptions:
Total Opinion of Probably Project Cost is rounded up to the nearest $10,000 and presented as 2024 dollars. To escalate to future dollars: from 2024 for the first 6 years of the Capital Improvement Program an inflation factor of 3.0% is utilized, and for years 7 to 20, an inflation factor of 2.4% is utilized.

City Notes:

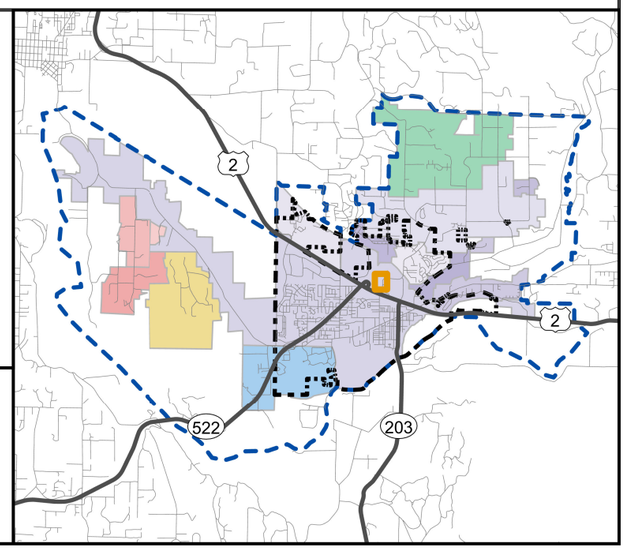

bhc CONSULTANTS
September 2024

Credits: Maxar

Water System: City of Monroe 2023 and 2024

Snohomish County base data 2023

Data sources supplied may not reflect current or actual conditions. This map is a geographic representation based on information available. It does not represent survey data. No warranty is made concerning the accuracy, currency, or completeness of data depicted on this map. BHC Consultants LLC., assumes no responsibility for the validity of any information presented herein, nor any responsibility for the use or misuse of the data.

COPYRIGHT © 2024 BHC CONSULTANTS LLC., ALL RIGHTS RESERVED

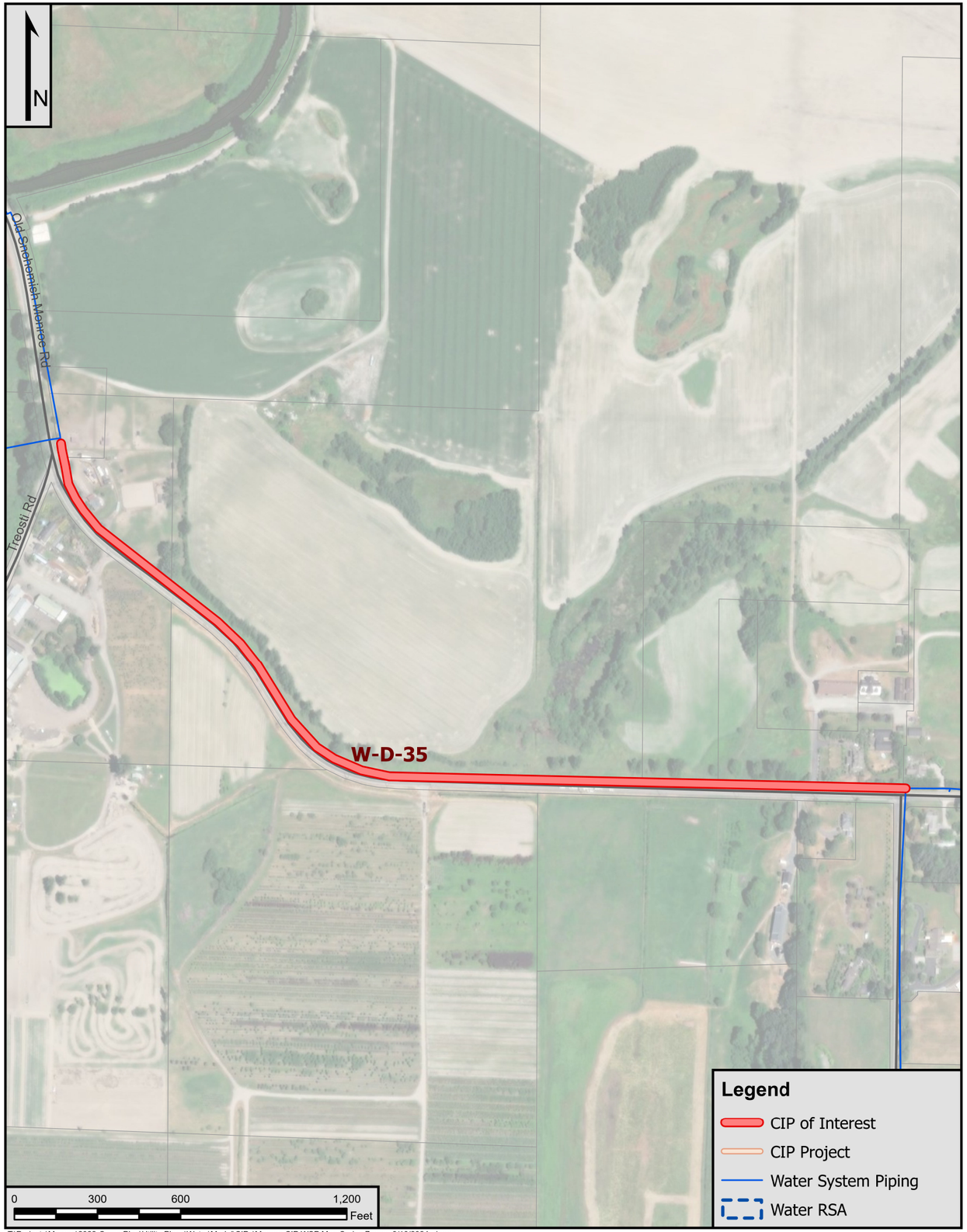

T:\Projects\Monroe\2022-Comp Plan\Utility Plans\Water\Model\CIPs\Monroe CIP WSP Map Series 7.aprx 9/10/2024 rjones

City of Monroe Utility Plan Update - Water

Project Name: W-D-35

Project Information

Project Description:
Old Snohomish Monroe Improvement; 7-15 year, Priority C
Existing: 6-inch, UNK
Proposed: 8-inch, DI

Project Duration:	2037-2039	**Length of Pipe (ft):**	3,700 ft
Special Considerations:		**Project Location:**	Piping along Old Snohomish Monroe Rd from 127th Ave SE west to Treosti Rd

Estimated Cost Breakdown

Total Opinion of Probable Project Cost	$ 2,960,000

Assumptions:

Total Opinion of Probably Project Cost is rounded up to the nearest $10,000 and presented as 2024 dollars. To escalate to future dollars: from 2024 for the first 6 years of the Capital Improvement Program an inflation factor of 3.0% is utilized, and for years 7 to 20, an inflation factor of 2.4% is utilized.

City Notes:

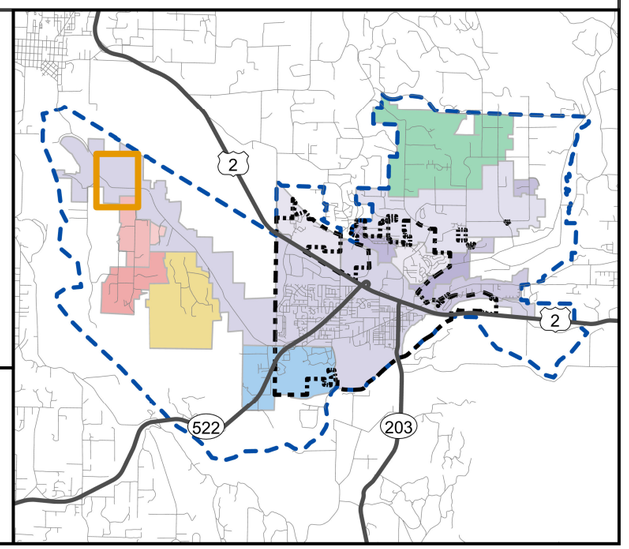

September 2024

Credits: Maxar

Water System: City of Monroe 2023 and 2024

Snohomish County base data 2023

Data sources supplied may not reflect current or actual conditions. This map is a geographic representation based on information available. It does not represent survey data. No warranty is made concerning the accuracy, currency, or completeness of data depicted on this map. BHC Consultants LLC., assumes no responsibility for the validity of any information presented herein, nor any responsibility for the use or misuse of the data.

COPYRIGHT © 2024 BHC CONSULTANTS LLC., ALL RIGHTS RESERVED

Appendix W-N

SEPA Checklist

THIS PAGE INTENTIONALLY BLANK

SEPA[1] Environmental Checklist

Purpose of checklist

Governmental agencies use this checklist to help determine whether the environmental impacts of your proposal are significant. This information is also helpful to determine if available avoidance, minimization, or compensatory mitigation measures will address the probable significant impacts or if an environmental impact statement will be prepared to further analyze the proposal.

Instructions for applicants

This environmental checklist asks you to describe some basic information about your proposal. Please answer each question accurately and carefully, to the best of your knowledge. You may need to consult with an agency specialist or private consultant for some questions. **You may use "not applicable" or "does not apply" only when you can explain why it does not apply and not when the answer is unknown.** You may also attach or incorporate by reference additional studies reports. Complete and accurate answers to these questions often avoid delays with the SEPA process as well as later in the decision-making process.

The checklist questions apply to **all parts of your proposal**, even if you plan to do them over a period of time or on different parcels of land. Attach any additional information that will help describe your proposal or its environmental effects. The agency to which you submit this checklist may ask you to explain your answers or provide additional information reasonably related to determining if there may be significant adverse impact.

Instructions for lead agencies

Please adjust the format of this template as needed. Additional information may be necessary to evaluate the existing environment, all interrelated aspects of the proposal and an analysis of adverse impacts. The checklist is considered the first but not necessarily the only source of information needed to make an adequate threshold determination. Once a threshold determination is made, the lead agency is responsible for the completeness and accuracy of the checklist and other supporting documents.

Use of checklist for nonproject proposals

For nonproject proposals (such as ordinances, regulations, plans and programs), complete the applicable parts of sections A and B, plus the Supplemental Sheet for Nonproject Actions (Part D). Please completely answer all questions that apply and note that the words "project," "applicant," and "property or site" should be read as "proposal," "proponent," and "affected geographic area," respectively. The lead agency may exclude (for non-projects) questions in "Part B: Environmental Elements" that do not contribute meaningfully to the analysis of the proposal.

[1] https://ecology.wa.gov/Regulations-Permits/SEPA/Environmental-review/SEPA-guidance/Checklist-guidance

A.Background

Find help answering background questions[2]

1. **Name of proposed project, if applicable:**

   City of Monroe - Utility System Plan (Water, Sewer, Storm)

2. **Name of applicant:**

   City of Monroe, Public Works Department

3. **Address and phone number of applicant and contact person:**

   806 W. Main St, Monroe, WA 98272

4. **Date checklist prepared:**

   9/9/24

5. **Agency requesting checklist:**

   City of Monroe

6. **Proposed timing of schedule (including phasing, if applicable):**

   Proposed adoption date is winter 2024

7. **Do you have any plans for future additions, expansion, or further activity related to or connected with this proposal? If yes, explain.**

   Yes, the plan recommends individual projects for the implementation of the Utility System Plan. These projects will likely require additional environmental analysis.

8. **List any environmental information you know about that has been prepared, or will be prepared, directly related to this proposal.**

   Monroe 2044 SEIS and 2015 EIS. Projects associated with the Utility System Plan will likely require additional environmental analysis.

9. **Do you know whether applications are pending for governmental approvals of other proposals directly affecting the property covered by your proposal? If yes, explain.**

   No

10. **List any government approvals or permits that will be needed for your proposal, if known.**

    This item will require approval by the City Council

11. **Give brief, complete description of your proposal, including the proposed uses and the size of the project and site. There are several questions later in this checklist that ask you to describe certain aspects of your proposal. You do not need to repeat those answers on this page. (Lead agencies may modify this form to include additional specific information on project description.)**

[2] https://ecology.wa.gov/Regulations-Permits/SEPA/Environmental-review/SEPA-guidance/SEPA-checklist-guidance/SEPA-Checklist-Section-A-Background

The 2024 Utility System Plan is a non-project action that provides a strategic framework for the long-term development, maintenance, and enhancement of essential infrastructure systems. The plan addresses critical needs in water distribution, wastewater collection, and stormwater management to support the growing community. It identifies both physical infrastructure projects, such as pipeline expansions, facility upgrades, and flood mitigation measures, and programmatic initiatives aimed at improving system efficiency, sustainability, and resilience. This comprehensive plan ensures that future investments align with community growth, environmental stewardship, and regulatory compliance staffing needs, while promoting the safe, reliable, and cost-effective delivery of utility services.

12. **Location of the proposal. Give sufficient information for a person to understand the precise location of your proposed project, including a street address, if any, and section, township, and range, if known. If a proposal would occur over a range of area, provide the range or boundaries of the site(s). Provide a legal description, site plan, vicinity map, and topographic map, if reasonably available. While you should submit any plans required by the agency, you are not required to duplicate maps or detailed plans submitted with any permit applications related to this checklist.**

    Projects will take place throughout the City of Monroe. See plan for specific locations.

B.Environmental Elements

1. Earth

Find help answering earth questions[3]

a. **General description of the site:**

    The proposal is a nonproject action. The area covered by the CFP includes flat, gently rolling and hilly terrain, with some steep slopes.

Circle or highlight one: Flat, rolling, hilly, steep slopes, mountainous, other:

b. **What is the steepest slope on the site (approximate percent slope)?**

    The proposal is a nonproject action. Slopes will be addressed under the environmental review for each capital project proposed within the Utility System Plan as they are developed.

c. **What general types of soils are found on the site (for example, clay, sand, gravel, peat, muck)? If you know the classification of agricultural soils, specify them, and note any agricultural land of long-term commercial significance and whether the proposal results in removing any of these soils.**

[3] https://ecology.wa.gov/regulations-permits/sepa/environmental-review/sepa-guidance/sepa-checklist-guidance/sepa-checklist-section-b-environmental-elements/environmental-elements-earth

The proposal is a nonproject action. Sensitive soils and their functions will be addressed under the environmental review for each capital project proposed within the Master Plan as they are developed.

d. Are there surface indications or history of unstable soils in the immediate vicinity? If so, describe.

The proposal is a nonproject action. Soil stability will be assessed on an individual project basis through the SEPA review process and through the local grading permit process as each capital project is developed.

e. Describe the purpose, type, total area, and approximate quantities and total affected area of any filling, excavation, and grading proposed. Indicate source of fill.

The proposal is a nonproject action. Grading and filling requirements will be assessed on an individual project basis through the SEPA review process and through the local grading permit process as each capital project is developed.

f. Could erosion occur because of clearing, construction, or use? If so, generally describe.

The proposal is a nonproject action. Erosion would not occur as a result of the adoption of the Utility System Plan. Capital projects proposed within the Utility System Plan may potentially cause some erosion during construction. This potential is intensified on steeper embankments and slopes. Timing and phasing of construction, the amount of vegetation removed, the effectiveness of erosion control measures, and weather conditions will be evaluated during planning and permitting for each capital project, and will be addressed on a per project basis under environmental review as well.

g. About what percent of the site will be covered with impervious surfaces after project construction (for example, asphalt or buildings)?

The proposal is a nonproject action. Impervious surfaces will not result from the adoption of the Utility System Plan, though capital projects proposed within the plan would result in small quantities of increased impervious surface.

h. Proposed measures to reduce or control erosion, or other impacts to the earth, if any.

The proposal is a nonproject action. As each capital project is planned, a temporary erosion and sedimentation control plan would be developed as part of the construction plans to minimize erosion and contain sediment during construction. Erosion and sedimentation control measures may include vegetation retention, temporary and permanent seeding, erosion control fabrics, fabric filter fences, gravel berms, and other BMPs as described in the Stormwater Management manual for Western Washington Monitoring and maintenance of such control measures would be conducted throughout construction to ensure proper performance

2. Air

Find help answering air questions[4]

a. What types of emissions to the air would result from the proposal during construction, operation, and maintenance when the project is completed? If any, generally describe and give approximate quantities if known.

The proposal is a nonproject action. Development of the proposed capital projections described within the Utility System Plan will require an analysis of emissions on a per-project basis. These emissions will be quantified during the planning and permitting stages of each capital project.

b. Are there any off-site sources of emissions or odor that may affect your proposal? If so, generally describe.

Not applicable. The proposal is a nonproject action.

c. Proposed measures to reduce or control emissions or other impacts to air, if any:

Not applicable. The proposal is a nonproject action.

3. Water

Find help answering water questions[5]

a. Surface:

Find help answering surface water questions[6]

1. Is there any surface water body on or in the immediate vicinity of the site (including year-round and seasonal streams, saltwater, lakes, ponds, wetlands)? If yes, describe type and provide names. If appropriate, state what stream or river it flows into.

The proposal is a nonproject action. Some projects proposed in the Utility System Plan are located in the immediate vicinity of a waterbody. However, specific plans for these and other proposed improvements have yet to be developed. A project specific environmental review and any necessary Critical Areas, Floodplains or

[4] https://ecology.wa.gov/Regulations-Permits/SEPA/Environmental-review/SEPA-guidance/SEPA-checklist-guidance/SEPA-Checklist-Section-B-Environmental-elements/Environmental-elements-Air
[5] https://ecology.wa.gov/Regulations-Permits/SEPA/Environmental-review/SEPA-guidance/SEPA-checklist-guidance/SEPA-Checklist-Section-B-Environmental-elements/Environmental-elements-3-Water
[6] https://ecology.wa.gov/Regulations-Permits/SEPA/Environmental-review/SEPA-guidance/SEPA-checklist-guidance/SEPA-Checklist-Section-B-Environmental-elements/Environmental-elements-3-Water/Environmental-elements-Surface-water

Shoreline Management permitting will precede construction of each project action described in the Master Plan.

2. **Will the project require any work over, in, or adjacent to (within 200 feet) the described waters? If yes, please describe and attach available plans.**

   The proposal is a nonproject action and adoption of the Utility System Plan will not require work near or in water.

   The proposed projects within the Master Plan may be located within 200 feet of the waters described above. However, specific plans for these and other proposed improvements have yet to be developed. A project specific environmental review and any necessary Critical Areas, Floodplains or Shoreline Management permitting will precede construction of each project action described in the Master Plan.

3. **Estimate the amount of fill and dredge material that would be placed in or removed from surface water or wetlands and indicate the area of the site that would be affected. Indicate the source of fill material.**

   These impacts are not anticipated under this nonproject action.

4. **Will the proposal require surface water withdrawals or diversions? Give a general description, purpose, and approximate quantities if known.**

   The proposal is a nonproject action. Proposed projects within the Utility System Plan would not require surface water withdrawals or diversions. Any project impacts to stormwater will be mitigated with BMPs and analyzed at project specific level.

5. **Does the proposal lie within a 100-year floodplain? If so, note location on the site plan.**

   The proposal is a nonproject action. However, portions of proposed future improvements may lie within the 100-year floodplain. A definitive determination of floodplain proximity, together with a project specific environmental review, will be developed prior to implementation of all capital projects and improvements.

6. **Does the proposal involve any discharges of waste materials to surface waters? If so, describe the type of waste and anticipated volume of discharge.**

   The proposal is a nonproject action. It is not anticipated the projects identified in the Utility System Plan will required the discharges of waste materials to surface waters.

b. Ground:

Find help answering ground water questions[7]

1. **Will groundwater be withdrawn from a well for drinking water or other purposes? If so, give a general description of the well, proposed uses and approximate quantities withdrawn from the well. Will water be discharged to groundwater? Give a general description, purpose, and approximate quantities if known.**

[7] https://ecology.wa.gov/Regulations-Permits/SEPA/Environmental-review/SEPA-guidance/SEPA-checklist-guidance/SEPA-Checklist-Section-B-Environmental-elements/Environmental-elements-3-Water/Environmental-elements-Groundwater

The proposal is a nonproject action. Any expected water discharge that comes up during project design will be permitted and conditioned under a project specific environmental review.

2. **Describe waste material that will be discharged into the ground from septic tanks or other sources, if any (domestic sewage; industrial, containing the following chemicals…; agricultural; etc.). Describe the general size of the system, the number of such systems, the number of houses to be served (if applicable), or the number of animals or humans the system(s) are expected to serve.**

   The proposal is a nonproject action. The identified projects do not anticipate discharging waste material into the ground.

c. Water Runoff (including stormwater):

1. **Describe the source of runoff (including storm water) and method of collection and disposal, if any (include quantities, if known). Where will this water flow? Will this water flow into other waters? If so, describe.**

   The proposal is a nonproject action. Capital projects proposed within the Utility Master Plan would result in construction runoff as well as runoff from the roofs of completed reservoirs and other structures. Each project action proposed within the Utility System Plan will require runoff controls prescribed by local permit requirements and project specific environmental review.

2. **Could waste materials enter ground or surface waters? If so, generally describe.**

   The proposal is a nonproject action and not anticipated with the proposed projects.

3. **Does the proposal alter or otherwise affect drainage patterns in the vicinity of the site? If so, describe.**

   The proposal is a nonproject action. Each project action proposed within the Utility System Plan will be evaluated for any effects to site drainage during predesign and permitting.

d. Proposed measures to reduce or control surface, ground, and runoff water, and drainage pattern impacts, if any:

The proposal is a nonproject action. Project actions as proposed within the Utility System Plan will adhere to standard construction practices (temporary erosion and sedimentation controls) as required by the City of Monroe.

4. Plants

Find help answering plants questions

a. Check the types of vegetation found on the site:

☒ **deciduous tree: alder, maple, aspen, other**

☒ **evergreen tree: fir, cedar, pine, other**

☒ **shrubs**

☒ **grass**

☒ **pasture**

☐ **crop or grain**

☐ **orchards, vineyards, or other permanent crops.**

☒ **wet soil plants: cattail, buttercup, bullrush, skunk cabbage, other**

☒ **water plants: water lily, eelgrass, milfoil, other**

☐ **other types of vegetation**

b. What kind and amount of vegetation will be removed or altered?

The proposal is a nonproject action. As a result of proposed capital projects and system improvements proposed in the Utility System Plan, grasses, native shrubs, and some trees in the vicinity of facility construction activities and other land disturbing work would be disrupted or removed.

c. List threatened and endangered species known to be on or near the site.

The proposal is a nonproject action. Threatened and endangered species and their habitats will be protected as each project is planned and permitted under individual environmental review and local permitting processes for each capital improvement project proposal and system improvement project.

d. Proposed landscaping, use of native plants, or other measures to preserve or enhance vegetation on the site, if any.

The proposal is a nonproject action. Erosion control in areas of disrupted vegetation will be provided during construction. Revegetation will take place following construction.

e. List all noxious weeds and invasive species known to be on or near the site.

The proposal is a nonproject action. This will be reviewed at a project level. All invasive species will be handled in accordance with the applicable State regulations.

5. Animals

Find help answering animal questions[8]

a. List any birds and other animals that have been observed on or near the site or are known to be on or near the site.

Examples include:

- **Birds: hawk, heron, eagle, songbirds, other:**
- **Mammals: deer, bear, elk, beaver, other:**
- **Fish: bass, salmon, trout, herring, shellfish, other:**

[8] https://ecology.wa.gov/Regulations-Permits/SEPA/Environmental-review/SEPA-guidance/SEPA-checklist-guidance/SEPA-Checklist-Section-B-Environmental-elements/Environmental-elements-5-Animals

b. List any threatened and endangered species known to be on or near the site.

The proposal is a nonproject action. Threatened and endangered species and their habitats will be protected as each project is planned and permitted under individual environmental review and local permitting processes for each capital improvement project proposal and system improvement project.

c. Is the site part of a migration route? If so, explain.

This is a nonproject action. The capital projects and system improvement proposed within the Utility System Plan could result in impacts to various sites throughout the service area where those projects are proposed. The Skykomish River is part of the Puget Sound Basin, which is included in the Pacific flyway. Larger mammals migrate between higher and lower elevations, seasonally, through portions of the City of Monroe and its water service area. The Skykomish and Woods Creek area are conduits for the migration of a number of anadromous fish species.

d. Proposed measures to preserve or enhance wildlife, if any.

The proposal is a nonproject action. Although significant wildlife and habitat impacts are not anticipated, specific mitigation measures will be developed within the early design and planning stages for each proposed capital project and in response to resource agency concerns associated with the implementation of each capital project and system improvement proposed within the Utility System Plan.

e. List any invasive animal species known to be on or near the site.

The proposal is a nonproject action. The capital projects and system improvement proposed within the Utility System Plan could result in impacts to various sites throughout the service area where those projects are proposed. Any invasive species discovered during pre-design or surveying for projects included in the Utility System Plan will be included in the project environmental analyses.

6. Energy and natural resources

Find help answering energy and natural resource questions[9]

a. What kinds of energy (electric, natural gas, oil, wood stove, solar) will be used to meet the completed project's energy needs? Describe whether it will be used for heating, manufacturing, etc.

The proposal is a nonproject action. Energy would be required for the construction of any proposed system improvement or capital project and would principally include diesel and gasoline fuel used by construction vehicles and equipment, and by workers accessing construction sites. Pump station facilities and improvements will require increased electricity, and possibly other energy sources, for operation.

[9] https://ecology.wa.gov/Regulations-Permits/SEPA/Environmental-review/SEPA-guidance/SEPA-checklist-guidance/SEPA-Checklist-Section-B-Environmental-elements/Environmental-elements-6-Energy-natural-resou

b. Would your project affect the potential use of solar energy by adjacent properties? If so, generally describe.

No, the proposed projects are at or near existing grade.

c. What kinds of energy conservation features are included in the plans of this proposal? List other proposed measures to reduce or control energy impacts, if any.

The Utility System Plan promotes multimodal transportation and is intended to reduce the energy needs typically associated with transportation.

7. Environmental health

Health Find help with answering environmental health questions[10]

a. Are there any environmental health hazards, including exposure to toxic chemicals, risk of fire and explosion, spill, or hazardous waste, that could occur because of this proposal? If so, describe.

The proposal is a nonproject action. Implementation of the proposed projects within the Utility System Plan could result in some environmental health hazards common to construction projects. The potential for spills of fuel, oil, lubricants, solvents, disinfecting agents or concrete additives used during construction has the potential to impact human health and damage natural resources. Best Management Practices (BMPs) will be followed in all cases, and appropriate hazard plans and chemical handling procedures specific to each site, compound and project will be followed.

1. **Describe any known or possible contamination at the site from present or past uses.**

   The proposal is a nonproject action. This does not apply.

2. **Describe existing hazardous chemicals/conditions that might affect project development and design. This includes underground hazardous liquid and gas transmission pipelines located within the project area and in the vicinity.**

   The proposal is a nonproject action. This does not apply.

3. **Describe any toxic or hazardous chemicals that might be stored, used, or produced during the project's development or construction, or at any time during the operating life of the project.**

   The proposal is a nonproject action. This does not apply.

4. **Describe special emergency services that might be required.**

   The proposal is a nonproject action. This does not apply.

5. **Proposed measures to reduce or control environmental health hazards, if any.**

   The proposal is a nonproject action. This does not apply.

b. Noise

[10] https://ecology.wa.gov/Regulations-Permits/SEPA/Environmental-review/SEPA-guidance/SEPA-checklist-guidance/SEPA-Checklist-Section-B-Environmental-elements/Environmental-elements-7-Environmental-health

1. **What types of noise exist in the area which may affect your project (for example: traffic, equipment, operation, other)?**

   The proposal is a nonproject action. This does not apply.

2. **What types and levels of noise would be created by or associated with the project on a short-term or a long-term basis (for example: traffic, construction, operation, other)? Indicate what hours noise would come from the site)?**

   The proposal is a nonproject action. Construction activities associated with the implementation of the CFP would generate short-term noise during the construction period. Potential impacts from project specific noise would be evaluated and mitigated with appropriate BMPs.

3. **Proposed measures to reduce or control noise impacts, if any:**

   The proposal is a nonproject action. This does not apply.

8. Land and shoreline use

Find help answering land and shoreline use questions[11]

a. **What is the current use of the site and adjacent properties? Will the proposal affect current land uses on nearby or adjacent properties? If so, describe.**

   The proposal is a nonproject action. The land uses which exist in the project area include a broad range of residential, commercial, industrial, agricultural, open space, and public uses.

b. **Has the project site been used as working farmlands or working forest lands? If so, describe. How much agricultural or forest land of long-term commercial significance will be converted to other uses because of the proposal, if any? If resource lands have not been designated, how many acres in farmland or forest land tax status will be converted to nonfarm or nonforest use?**

   The proposal is a nonproject action. This does not apply.

   1. **Will the proposal affect or be affected by surrounding working farm or forest land normal business operations, such as oversize equipment access, the application of pesticides, tilling, and harvesting? If so, how?**

      The proposal is a nonproject action. This does not apply.

c. **Describe any structures on the site.**

   The proposal is a nonproject action. This does not apply.

d. **Will any structures be demolished? If so, what?**

   The proposal is a nonproject action. This does not apply.

e. **What is the current zoning classification of the site?**

[11] https://ecology.wa.gov/Regulations-Permits/SEPA/Environmental-review/SEPA-guidance/SEPA-checklist-guidance/SEPA-Checklist-Section-B-Environmental-elements/Environmental-elements-8-Land-shoreline-use

The proposal is a nonproject action. This does not apply.

f. What is the current comprehensive plan designation of the site?

The proposal is a nonproject action. This does not apply.

g. If applicable, what is the current shoreline master program designation of the site?

The proposal is a nonproject action. This does not apply.

h. Has any part of the site been classified as a critical area by the city or county? If so, specify.

The proposal is a nonproject action. This does not apply.

i. Approximately how many people would reside or work in the completed project?

The proposal is a nonproject action. This does not apply.

j. Approximately how many people would the completed project displace?

The proposal is a nonproject action. This does not apply.

k. Proposed measures to avoid or reduce displacement impacts, if any.

The proposal is a nonproject action. This does not apply.

l. Proposed measures to ensure the proposal is compatible with existing and projected land uses and plans, if any.

The proposed projects within the Utility System Plan were reviewed for consistency with the existing and projected land uses and plans. No conflicts were noted during the development of the Utility System Plan.

m. Proposed measures to reduce or control impacts to agricultural and forest lands of long-term commercial significance, if any:

None, the Utility System Plan does not identify potential impacts to agricultural and forest lands.

9. Housing

Find help answering housing questions[12]

a. Approximately how many units would be provided, if any? Indicate whether high, middle, or low-income housing.

None, the Plan does not add or remove any units.

b. Approximately how many units, if any, would be eliminated? Indicate whether high, middle, or low-income housing.

None, the Plan does not add or remove any units.

c. Proposed measures to reduce or control housing impacts, if any:

[12] https://ecology.wa.gov/Regulations-Permits/SEPA/Environmental-review/SEPA-guidance/SEPA-checklist-guidance/SEPA-Checklist-Section-B-Environmental-elements/Environmental-elements-9-Housing

None, the Plan does not add or remove any units.

10. Aesthetics

Find help answering aesthetics questions[13]

a. What is the tallest height of any proposed structure(s), not including antennas; what is the principal exterior building material(s) proposed?

The majority of the improvements are below ground (i.e. water, sewer, storm pipes) at or slightly above grade.

b. What views in the immediate vicinity would be altered or obstructed?

None

c. Proposed measures to reduce or control aesthetic impacts, if any:

None are identified at this time.

11. Light and glare

Find help answering light and glare questions[14]

a. What type of light or glare will the proposal produce? What time of day would it mainly occur?

No lighting is proposed at this time.

b. Could light or glare from the finished project be a safety hazard or interfere with views?

N/A

c. What existing off-site sources of light or glare may affect your proposal?

Nothing has been identified.

d. Proposed measures to reduce or control light and glare impacts, if any:

None needed at this time.

12. Recreation

Find help answering recreation questions

a. What designated and informal recreational opportunities are in the immediate vicinity?

The Utility System Plan is a nonproject action that does not directly create or modify recreational opportunities. However, utility infrastructure projects may be located near designated and informal recreational areas.

b. Would the proposed project displace any existing recreational uses? If so, describe.

[13] https://ecology.wa.gov/Regulations-Permits/SEPA/Environmental-review/SEPA-guidance/SEPA-checklist-guidance/SEPA-Checklist-Section-B-Environmental-elements/Environmental-elements-10-Aesthetics
[14] https://ecology.wa.gov/Regulations-Permits/SEPA/Environmental-review/SEPA-guidance/SEPA-checklist-guidance/SEPA-Checklist-Section-B-Environmental-elements/Environmental-elements-11-Light-glare

No, it would enhance recreational opportunities.

c. Proposed measures to reduce or control impacts on recreation, including recreation opportunities to be provided by the project or applicant, if any:

No impacts are identified.

13. Historic and cultural preservation

Find help answering historic and cultural preservation questions[15]

a. Are there any buildings, structures, or sites, located on or near the site that are over 45 years old listed in or eligible for listing in national, state, or local preservation registers? If so, specifically describe.

The proposal is a nonproject action. No historical or cultural resources are known to exist on or next to the sites of proposed system improvements or capital projects. Prior to any construction, inquiries will be made into County records and to the Washington State Office of Archaeology and Historic Preservation (OAHP) regarding the presence of any known cultural resources.

b. Are there any landmarks, features, or other evidence of Indian or historic use or occupation? This may include human burials or old cemeteries. Are there any material evidence, artifacts, or areas of cultural importance on or near the site? Please list any professional studies conducted at the site to identify such resources.

The proposal is a nonproject action. None are known to exist at the sites of potential improvements. Appropriate records searches and surveys will be made before earth moving equipment is engaged.

c. Describe the methods used to assess the potential impacts to cultural and historic resources on or near the project site. Examples include consultation with tribes and the department of archeology and historic preservation, archaeological surveys, historic maps, GIS data, etc.

The proposal is a nonproject action. During pre-design for each project, efforts will include consultation with tribes and the department of archeology and historic preservation, review of historic maps and GIS data, and site surveying

d. Proposed measures to avoid, minimize, or compensate for loss, changes to, and disturbance to resources. Please include plans for the above and any permits that may be required.

The proposal is a nonproject action. In addition to cultural resource studies, any evidence of historic or cultural resources is encountered during construction or installation of any work proposed within the Utility System Plan, all work would be halted in the area and a state-approved archaeologist/historian would be engaged to investigate, evaluate and/or move or curate such resources, as appropriate.

[15] https://ecology.wa.gov/Regulations-Permits/SEPA/Environmental-review/SEPA-guidance/SEPA-checklist-guidance/SEPA-Checklist-Section-B-Environmental-elements/Environmental-elements-13-Historic-cultural-p

14. Transportation

Find help with answering transportation questions[16]

a. Identify public streets and highways serving the site or affected geographic area and describe proposed access to the existing street system. Show on site plans, if any.

The proposal is a nonproject action. This does not apply.

b. Is the site or affected geographic area currently served by public transit? If so, generally describe. If not, what is the approximate distance to the nearest transit stop?

The proposal is a nonproject action. This does not apply.

Will the proposal require any new or improvements to existing roads, streets, pedestrian, bicycle, or state transportation facilities, not including driveways? If so, generally describe (indicate whether public or private).

The proposal, as a Utility System Plan, does not directly mandate new roads, streets, pedestrian, bicycle, or state transportation facilities. However, certain capital utility projects, such as the installation or replacement of water, sewer, and stormwater infrastructure, may necessitate temporary improvements or modifications to existing roads or sidewalks to facilitate construction activities. These improvements are typically short-term and occur within the public right-of-way.

In some cases, coordination with transportation agencies may be required for more extensive projects, such as utility expansions that coincide with roadway or pedestrian improvements. For example, trenching or pipe replacement could impact public roads, and may involve resurfacing or reconfiguring parts of the street or sidewalk following utility work. Additionally, utility projects may align with larger transportation goals, such as incorporating green stormwater infrastructure into road designs or improving drainage in flood-prone areas. Any such improvements would be public and designed to enhance both utility and transportation systems.

c. Will the project or proposal use (or occur in the immediate vicinity of) water, rail, or air transportation? If so, generally describe.

The proposal is a nonproject action. This does not apply.

d. How many vehicular trips per day would be generated by the completed project or proposal? If known, indicate when peak volumes would occur and what percentage of the volume would be trucks (such as commercial and nonpassenger vehicles). What data or transportation models were used to make these estimates?

The proposal is a nonproject action. This does not apply.

e. Will the proposal interfere with, affect, or be affected by the movement of agricultural and forest products on roads or streets in the area? If so, generally describe.

[16] https://ecology.wa.gov/Regulations-Permits/SEPA/Environmental-review/SEPA-guidance/SEPA-checklist-guidance/SEPA-Checklist-Section-B-Environmental-elements/Environmental-elements-14-Transportation

The proposal is a nonproject action. This does not apply.

f. Proposed measures to reduce or control transportation impacts, if any:

The proposal is a nonproject action. This does not apply.

15. Public services

Find help answering public service questions[17]

a. Would the project result in an increased need for public services (for example: fire protection, police protection, public transit, health care, schools, other)? If so, generally describe.

The proposal is a nonproject action. This does not apply.

b. Proposed measures to reduce or control direct impacts on public services, if any.

The proposal is a nonproject action. This does not apply.

16. Utilities

Find help answering utilities questions[18]

a. Circle utilities currently available at the site: electricity, natural gas, water, refuse service, telephone, sanitary sewer, septic system, other:

The proposal is a nonproject action. This does not apply.

b. Describe the utilities that are proposed for the project, the utility providing the service, and the general construction activities on the site or in the immediate vicinity which might be needed.

The proposal is a nonproject action. This does not apply.

C.Signature

Find help about who should sign[19]

The above answers are true and complete to the best of my knowledge. I understand that the lead agency is relying on them to make its decision.

X Jordan Ottow

Type name of signee:

Jordan Ottow

[17] https://ecology.wa.gov/regulations-permits/sepa/environmental-review/sepa-guidance/sepa-checklist-guidance/sepa-checklist-section-b-environmental-elements/environmental-elements-15-public-services
[18] https://ecology.wa.gov/regulations-permits/sepa/environmental-review/sepa-guidance/sepa-checklist-guidance/sepa-checklist-section-b-environmental-elements/environmental-elements-16-utilities
[19] https://ecology.wa.gov/Regulations-Permits/SEPA/Environmental-review/SEPA-guidance/SEPA-checklist-guidance/SEPA-Checklist-Section-C-Signature

Position and agency/organization: Public Works, Operations Manager/City of Monroe

Date submitted:

D.Supplemental sheet for nonproject actions

Find help for the nonproject actions worksheet[20]

Do not use this section for project actions.

Because these questions are very general, it may be helpful to read them in conjunction with the list of the elements of the environment.

When answering these questions, be aware of the extent the proposal, or the types of activities likely to result from the proposal, would affect the item at a greater intensity or at a faster rate than if the proposal were not implemented. Respond briefly and in general terms.

1. **How would the proposal be likely to increase discharge to water; emissions to air; production, storage, or release of toxic or hazardous substances; or production of noise?**

   The proposal, as a nonproject Utility System Plan, is not expected to directly increase discharges to water, emissions to air, the production or release of toxic or hazardous substances, or the production of noise. However, individual capital utility projects identified within the plan could have temporary construction-related impacts during their implementation.

   Discharge to Water: Projects that improve water and sewer infrastructure may involve temporary increases in stormwater runoff during construction activities, especially if soil is disturbed. However, long-term impacts are likely to be positive, as stormwater management improvements, including upgrades to drainage systems, green infrastructure, and treatment facilities, are intended to reduce the risk of flooding and improve water quality.

   Emissions to Air: Temporary increases in emissions may occur during construction due to the use of heavy machinery and vehicles. These impacts would be localized and short-term, with mitigation measures such as dust control and efficient equipment use to minimize air quality impacts.

   Toxic or Hazardous Substances: The plan itself does not involve the production or release of hazardous substances. However, utility projects that involve the replacement or repair of aging infrastructure could potentially encounter and manage hazardous materials, such as asbestos in old pipes or contaminated soils. Any such materials would be handled in accordance with regulatory standards to ensure safety and environmental protection.

   Production of Noise: Noise impacts are also expected to be temporary and limited to construction phases. Typical sources would include machinery, excavation, and

[20] https://ecology.wa.gov/regulations-permits/sepa/environmental-review/sepa-guidance/sepa-checklist-guidance/sepa-checklist-section-d-non-project-actions

transportation of materials. These activities would comply with local noise ordinances and best practices to minimize disruption to surrounding communities.

In the long term, the projects identified in the plan are designed to enhance environmental sustainability by improving water and wastewater treatment and reducing the likelihood of pollution from stormwater runoff or sewer overflows.

- **Proposed measures to avoid or reduce such increases are:**

  The water runoff from the increase in impervious surface will be treated in accordance with the WW Stormwater Manual

2. How would the proposal be likely to affect plants, animals, fish, or marine life?

Adverse impacts on plants, animals, fish, or marine life are not anticipated as part of the implementation of the Utility System Plan. The majority of proposed work would take place within existing, improved ROW. Those that are not within these areas will undergo a individual assessment prior to construction.

- **Proposed measures to protect or conserve plants, animals, fish, or marine life are:**

  None needed in association with the Utility System Plan.

3. How would the proposal be likely to deplete energy or natural resources?

Not likely.

- **Proposed measures to protect or conserve energy and natural resources are:**

Energy Efficiency in Infrastructure: New and upgraded utility infrastructure (water, sewer, storm systems) will incorporate energy-efficient technologies and equipment. For example, high-efficiency pumps and motors can be installed in water and wastewater systems to reduce energy consumption. Automated monitoring systems can also be utilized to optimize energy use by detecting leaks or inefficiencies.

Sustainable Water Management: The plan promotes water conservation through improved infrastructure that reduces water loss from leaks in distribution systems. It may also include measures such as low-energy treatment processes, greywater reuse, and the promotion of water-efficient practices among consumers, reducing the demand for natural water resources.

Stormwater Management Practices: Incorporating green infrastructure, such as rain gardens, permeable pavements, and bioswales, can help manage stormwater in a way that conserves natural resources. These measures reduce the need for energy-intensive stormwater pumping and treatment while promoting natural groundwater recharge.

Renewable Energy Options: Where feasible, the plan may encourage the use of renewable energy sources, such as solar panels for water treatment facilities, to reduce reliance on non-renewable energy.

Lifecycle Sustainability: Selecting durable materials for pipelines, pumps, and other infrastructure will reduce the frequency of replacements, conserving the raw materials and energy required for ongoing repairs and rebuilds.

4. **How would the proposal be likely to use or affect environmentally sensitive areas or areas designated (or eligible or under study) for governmental protection, such as parks, wilderness, wild and scenic rivers, threatened or endangered species habitat, historic or cultural sites, wetlands, floodplains, or prime farmlands?**

It is a very low likelihood that any of the projects resulting from the Utility System Plan would negatively impact these areas.

- **Proposed measures to protect such resources or to avoid or reduce impacts are:**

  None needed in association with the Utility System Plan.

5. **How would the proposal be likely to affect land and shoreline use, including whether it would allow or encourage land or shoreline uses incompatible with existing plans?**

It is a very low likelihood that any of the projects resulting from the Utility System Plan would negatively impact these areas.

- **Proposed measures to avoid or reduce shoreline and land use impacts are:**

  Not applicable.

6. **How would the proposal be likely to increase demands on transportation or public services and utilities?**

   The Utility System Plan itself, as a nonproject action, is not expected to directly increase demands on transportation, public services, or utilities. However, individual capital projects identified in the plan, such as water, sewer, and stormwater infrastructure improvements, may temporarily impact these areas during their construction phases. Specifically:

- **Transportation**: Construction activities for utility upgrades (e.g., water main replacements, sewer line installations) may require temporary road closures, detours, or increased traffic congestion due to construction vehicles and equipment. This could increase short-term demand on transportation infrastructure, particularly around construction zones.
- **Public Services**: Utility work could require temporary coordination with public services, such as police and fire departments, to manage traffic control or provide emergency access during construction. In some cases, service disruptions (e.g., water shut-offs or detours) may also place temporary demands on public communication services to notify and manage impacts to the public.

- **Utilities**: During construction, there may be brief service interruptions or reductions in capacity for existing water, sewer, or storm systems. Additionally, improvements to infrastructure could increase the capacity for future development, leading to potential long-term increases in demand for utility services as population and development grow.

  - **Proposed measures to reduce or respond to such demand(s) are:**
  - Traffic and Transportation Management: Implement traffic control plans, including the use of detours, lane reductions, and scheduled work during off-peak hours to minimize disruptions to transportation. Clear signage and advance public notifications can help reduce the impact on local transportation networks.
  - Service Coordination: Work closely with public services (e.g., police, fire, emergency medical services) to ensure access to construction areas and affected neighborhoods. This includes ensuring that emergency vehicles can navigate construction zones and that service interruptions are minimized or planned during times of low impact.

    Utility Service Disruptions: Minimize service interruptions by planning and scheduling utility work during low-demand periods, providing advance notice to affected residents and businesses, and ensuring temporary services are available if required. Utility providers can coordinate with construction teams to ensure continuous service whenever possible.
  - Long-Term Utility Capacity Planning: The Utility System Plan is designed to address future growth and development, ensuring that improvements in water, sewer, and stormwater infrastructure can meet increased demands over time. By upgrading systems before they reach capacity, the plan proactively reduces future stress on utility services.

7. Identify, if possible, whether the proposal may conflict with local, state, or federal laws or requirements for the protection of the environment.

None

Chapter W 4 Description of the Water System

W 4.1 Ownership and Management

The City Water System is owned and operated by the City, a municipal corporation. Ultimate decision-making authority rests with the Mayor and City Council. The City's water system is administered by a public entity and is not regulated by the Utilities and Transportation Commission (UTC) and does not expect to be placed under UTC regulation within the next ten years. The public water system identification number is 558201, and a copy of the 2023 Water Facilities Inventory (WFI) is included as Appendix W-A.

Day-to-day operation of the water system is under the general direction of the City's Public Works Operations & Maintenance Division Manager who serves as the water system manager and reports to the Public Works Director. The Public Works Director coordinates system analysis and design work, develops policies and goals for the water system and then forwards them to the City Council for consideration and adoption. The City's Organizational Chart is included as Figure 2-1 in Common Element Chapter 2 – Introduction. Additional information focused on water system staff, full-time equivalents (FTEs), and certifications are included in Chapter W 9 – Operations and Maintenance Program.

W 4.2 System History and Background

Common Elements Chapter 2 – Introduction includes a thorough discussion of the history of the City's water system, as well as the sewer and stormwater system. Common Elements Chapter 3 – Land Use and Service Area explores the City's topography, water resources, soils, geology, and land use in the context of the water, sewer, and stormwater utility service areas, with figures highlighting these features.

W 4.3 Related Plans

This Water System Plan focuses on local utility infrastructure that exists in a larger context of water supply and one piece of the larger critical utility puzzle of modernity. The following related plans are organized in alphabetical order, and each includes a brief description of its relevance to the Water System Plan and most include links to the full documents. This Water System Plan for the City is an appendix to the City's Comprehensive Plan, which also includes appendices for the City's Sanitary Sewer Plan, Stormwater Plan, and Environmental Impact Statement (EIS).

W 4.3.1 City of Everett Water Comprehensive Plan[1]

The City of Everett Water Comprehensive Plan reaffirms the City of Everett's (Everett's) duty to serve. The Spada and Chaplain Reservoirs, located within the Sultan Basin, serve as the primary sources for Everett's water supply with 50 billion gallons and 5.2 billion gallons of capacity respectively. This supply complex is connected to the distribution system via four major transmission pipelines, varying in diameter from 36-inch to 52-inch. These pipelines serve to transport finished water from the filtration plant, destined for domestic use. As of 2020, Everett's potable water storage system comprised twelve separate facilities, with 31 Group A system direct wholesale customers, 66 Group B system direct wholesale customers, and 11 indirect wholesale customers. Everett has three water supply interties serving the City with a stated average day demand of 2.16 million gallons per day (MGD) as of 2020.

[1] City of Everett and HDR Engineering. 2020. *City of Everett Washington 2020 Comprehensive Water Plan.* Comprehensive Water System Plan, Everett Washington: City of Everett.

W 4.3.2 City of Monroe and Snohomish County Comprehensive Land Use Plans[2]

The City and Snohomish County's Comprehensive Land Use Plans are important for understanding future zoning for better understanding the future needs of the water system service areas. The effect of this plan, and other related plans on water demands and fire flow requirements, is discussed further in Chapter W 5 – Basic Planning Data of this document and in the City's Comprehensive Plan.

W 4.3.3 City of Monroe Environmental Impact Statement (EIS), Sanitary Sewer Plan, Stormwater Plan, and Traffic Plan

These plans have been prepared in parallel and collaboration with this Water System Plan. Capital improvements have contributed to aspects of the EIS, and the teams for the sewer, stormwater, and traffic plans have been coordinating to ensure that we are using the same data and assumptions where possible between these efforts.

W 4.3.4 North Snohomish County Coordinated Water System Plan[3]

The Coordinated Water System Plan (CWSP) was developed in accordance with the "Coordination Act" (Chapter 70.116 RCW; WAC 248-56) for water utilities in the State to coordinate their planning and construction programs with other water utilities and local governments in the same geographic area. Service area boundaries were identified by each utility for capital improvement planning and service responsibility. Evaluation of source requirements and source availability was conducted. Future water supply was discussed as a part of the CWSP. This water system plan has been informed by the prior 2010 North Snohomish County Coordinated Water System Plan. Snohomish County is in the process of adopting an updated North Snohomish County Coordinated Water System Plan.

W 4.3.5 Snohomish County 2020 Hazard Mitigation Plan4

In compliance with the Stafford Act, Disaster Mitigation Act of 2000, and 44 CFR 201, Snohomish County and Planning Partners maintain a Hazard Mitigation Plan (HMP), which was last updated in September 2015. The Snohomish County 2020 Hazard Mitigation Plan provides a framework for understanding potential risks and responding to natural hazards. In Chapter W 10 – Distribution Facilities Design and Construction Standards of this plan, the City is identified as being at high risk of Cybersecurity incident, earthquake, epidemic, flood, hazardous materials, and weather events.

The City has worked to mitigate these risks by leveraging utility fee funding to replace aging water mains susceptible to failure during earthquakes. They have also performed a Hazus software analysis related to the FEMA Natural Hazards Risk Assessment Program (NHRAP), which estimates financial losses due to potential natural disasters, and participates in FEMA's National Flood Insurance Program (NFIP) Community Rating System.

[2] Snohomish County. 2024. 2024 Comprehensive Plan Update. Comprehensive Plan, Everett: Snohomish County.

[3] Snohomish County Water Utility CoordArinating Committee. 2010. North Snohomish County Coordinated Water System Plan. Coordinated Water System Plan, Everett: Snohomish County.

[4] Snohomish County and Ecology and Environment Inc. 2020. Snohomish County 2020 Hazard Mitigation Plan. Hazard Mitigation Plan, Everett: Snohomish County.

W 4.3.6 Washington Restoration and Enhancement Plan WRIA 7 Snohomish Watershed[5]

Water Resources Inventory Area (WRIA) 7, the Snohomish Watershed, was designated by the State under the 1999 Endangered Species Act and later adoption under RCW 90.94 and has a Washington Watershed Restoration and Enhancement Plan. A Salmon Conservation Plan was developed for WRIA 7 through a multiple stakeholder process, including city and county elected officials, water and sewer districts, state and federal agencies, scientists, local businesses, and community environmental and educational groups.

While the City participated in this planning process as a member of an advisory panel. The Puget Sound Chinook Endangered Species Act Salmon Recovery Plan was approved by the National Oceanic and Atmospheric Administration (NOAA) Fisheries Service in 2007.

W 4.3.7 Washington State Department of Corrections Capital Improvements Plan

This plan, prepared in June 2011, outlines the projected water demands and anticipated improvements to the water system at the Monroe Correctional Complex. This plan was used to project future water demand at the Monroe Correctional Complex. In 2023, the Department of Corrections consumed approximately 59MG of water from the City.

W 4.4 Service Area, Maps, and Land Uses

The City's Water System is located within the North Snohomish County Critical Water Supply Service Area and is a party to the North Snohomish Coordinated Water System Plan. This Retail Service Area (RSA) does not include any Critical Water Supply Service Area (CWSSA) in the current or expected future RSA. The City's RSA is shown in the common element mapping in Common Elements Chapter 3 – Land Use and Service Area.

The City modified its future service area in 2002, ceding a portion along Old Owen Road to the Highland Water District. This is shown as an exception to the service area legal description included in Appendix W-B. In 2014, the City acquired the adjacent Sky Meadow Water Association. This increased the City's Water Service Area by approximately 80 percent. The legal description for this area is included in Appendix W-B.

W 4.4.1 Adjacent Water Purveyors

The City's RSA and applicable adjacent water purveyors are shown in Figure W 4-1. The water service area boundaries for the City's Water System are consistent with the Snohomish County Coordinated Water System Plan[6] and have been established in working with the County and adjacent water purveyors. The following is a brief description of each of those adjacent water purveyors and how they relate to the City's Water System.

[5] Department of Ecology and WRIA 7 Committee. 2022. *Watershed Restoration and Enhancement Plan: WRIA 7 Snohomish Watershed.* Watershed Restoration and Enhancement Plan, Olympia : Department of Ecology

[6] Snohomish County Water Utility Coordinating Committee. 2010. *North Snohomish County Coordinated Water System Plan.* Coordinated Water System Plan, Everett: Snohomish County.

THIS PAGE INTENTIONALLY BLANK.

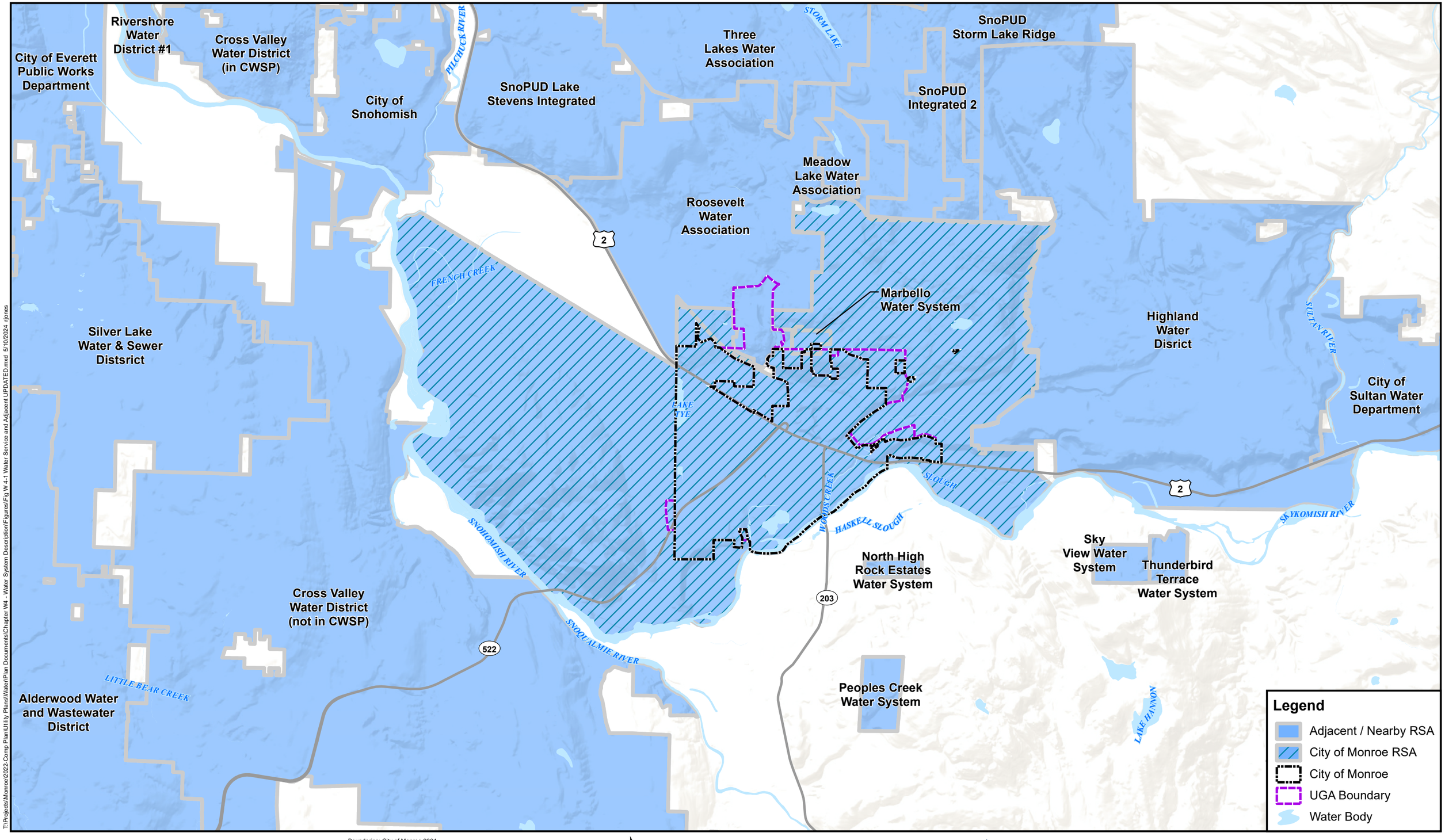

T:\Projects\Monroe\2022-Comp Plan\Utility Plans\Water\Plan Documents\Chapter W4 - Water System Description\Figures\Fig W 4-1 Water Service and Adjacent UPDATED.mxd 5/10/2024 rjones

Boundaries: City of Monroe 2024

Snohomish County base data 2014

Background Sources: Esri, USGS, NOAA

Data sources supplied may not reflect current or actual conditions. This map is a geographic representation based on information available. It does not represent survey data. No warranty is made concerning the accuracy, currency, or completeness of data depicted on this map. BHC Consultants LLC., assumes no responsibility for the validity of any information presented herein, nor any responsibility for the use or misuse of the data.

N

0 0.5 1 2 Miles

Retail Service Area (RSA) & Adjacent Water Purveyors

Water System Plan Update
City of Monroe, Washington
September 2024

Figure

W 4-1

COPYRIGHT © 2024 BHC CONSULTANTS LLC., ALL RIGHTS RESERVED

THIS PAGE INTENTIONALLY BLANK.

City of Everett

The City purchases its water from Everett. The City has three connections to Everett's Transmission Line No. 5, supplied from Lake Chaplain. This transmission line has a capacity of 50 million gallons per day and, since its construction in 1969, has proven to be a reliable source of supply for the City.

At the present time the City of Everett's Water System uses Lake Chaplain as a supply reservoir and provides treatment, including filtration, through a facility that was completed in 1984. Since 1984 the treatment facility has undergone ongoing improvements, based on increasing demands of municipal and industrial water supply and water quality issues set forth through the Safe Drinking Water Act. The City entered into an agreement to purchase water from Everett on April 18, 1963. Currently, Everett has eliminated water supply contracts and the City now purchases water at their wholesale rate. The City of Everett Washington 2020 Comprehensive Water Plan[7] indicates that the City of Everett expects to be able to continue to meet the City's future water demands.

City of Snohomish

The City of Snohomish water system serves the area to the northwest of the City's RSA west of U.S. Highway 2 (US-2). According to the City of Snohomish Comprehensive Water System Plan[8], this system has approximately 3,100 connections.

Cross Valley Water District

The Cross Valley Water District is located to the west and southwest of the City's RSA across the Snoqualmie River. Cross Valley Water District purveys water to approximately 7,000 connections.

Highland Water District

The Highland Water District serves the area northeast of the City, east of Wagner Lake and north of Old Owen Road. The Highland Water District has approximately 1,200 services. An emergency use only intertie has been formally discussed with Highland Water in the area of Old Owen Road and 225th Avenue SE. City staff are working with Highland Water District staff and the Washington State Department of Health to gain approval for this connection.

Marbello Water System

The Marbello Water System serves approximately 100 customers and is located near the intersection of Chain Lake Road and Brown Road. This association purchases water from the City's Water System at Out-of-City residential rates. The 2023 overall demand was approximately 7.3 MG or an average daily demand of approximately 19,990 gallons per day. The City is also required to provide standby storage for this water system.

Meadow Lake Water Association

The Meadow Lake Water Association service area is north of the City's RSA between Snohomish County Public Utility District (SnoPUD) Storm Lake Ridge and Roosevelt Water Association.

[7] City of Everett and HDR Engineering. 2019. *City of Everett Washington 2020 Comprehensive Water Plan.* Comprehensive Water System Plan, Everett Washington: City of Everett.

[8] Snohomish County Water Utility Coordinating Committee. 2010. *North Snohomish County Coordinated Water System Plan.* Coordinated Water System Plan, Everett: Snohomish County.

Roosevelt Water Association

The Roosevelt Water Association is a private water association serving the area northwest of the City. It presently has approximately 1,200 customers serving an area of approximately 2,500 acres. The area is served for the most part by 6-inch waterlines and is almost entirely residential. The Roosevelt Water Association also purchases its water from Everett. This area has begun to develop to urban densities with the need for sanitary sewer service. In 2021 the City amended Monroe Municipal Code (MMC) Title 13 to allow for the provision of sanitary sewer service to areas inside the City Limits that are served water by Roosevelt Water Association.

Snohomish Public Utility District (PUD)

Snohomish PUD has the following service areas that abut the City's service area; Lake Stevens Integrated, Storm Lake Ridge, and the proposed future SnoPUD Integrated 2 service areas, all located to the North of City's RSA. Based on the Snohomish County PUD 2021 Water System Plan[9] the Lake Stevens Integrated service area serves 19,742 connections and the Storm Lake Ridge service area serves approximately 250 connections.

W 4.4.2 Future Service Area

The City's Water System future service area was developed in 1991 as part of the North Snohomish County CWSSA planning process and was approved by the Snohomish County Boundary Review Board on September 17, 1990. The future service area is also shown in the 2010 North Snohomish County Coordinated Water System Plan[10] and will be shown in the updated coordinated water system plan.

As a general rule, the City does not proactively extend distribution mains into unserved areas. The City works with developers to bring water service to newly developing areas. If it is not economically feasible to extend water service, individual wells are usually installed.

W 4.5 System Policies

The City has adopted policies that affect system planning and operations that also satisfy requirements outlined in WAC 246-290-100(4)(a)(v).

W 4.5.1 Service Area Agreements

The City maintains simple agreements allowing the City to service a few bordering customers with the Snohomish PUD area and allows Highland Water to serve a few bordering customers that fall within the City's service area. These relationships are out of a practicality of hydraulics and there is no intent to change boundaries or expand these agreements at this time.

W 4.5.2 Service Area Policies

It is the adopted policy of the City to provide water service to any property within the water service area boundary. Prior to granting such service the applicant must meet all water system connection requirements and meet conditions of service. These requirements include line extensions if required, hydrant installation, and payment of front footage charges if due.

[9] Murraysmith and Snohomish County PUD. 2022. *Snohomish County PUD 2021 Water System Plan.* Water System Plan, Arlington, Lynnwood, Monroe Washington: Snohomish County PUD.

[10] Snohomish County Water Utility Coordinating Committee. 2010. *North Snohomish County Coordinated Water System Plan.* Coordinated Water System Plan, Everett: Snohomish County.

The City currently has a wholesale water rate that was established during a 2004 rate study completed by Financial Consulting Solutions Group, Inc. In 2008 Financial Consulting Solutions Group, Inc. updated this rate study. At the present time, the City does not intend to wholesale or wheel water to any customers or water purveyors, with the exception of the Marbello Water System. All new development in the RSA must connect directly to the existing water system to be served by the City's Water System. Satellite or remote systems are not allowed.

W 4.5.3 Annexation

The City does not require the water service applicant to annex to the City prior to providing water service nor does the City require the applicant to sign an agreement to annex or waiver of opposition to annexation. Chapter W 6 – System Analysis and Asset Management and Chapter W 10 – Distribution Facilities Design and Construction Standards discuss level of service as well as design standards and policies in more detail.

W 4.5.4 Consolidation

System Consolidation was explored in 2014 with the acquisition of the Sky Meadows water system to the west of the City Boundary. There are no further plans to consolidate the City's water system with adjacent entities.

W 4.5.5 Conditions of Service

The City's Water System conditions of service are set forth in Chapter 13.04 of the Monroe Municipal Code. Design and construction standards are included in the City of Monroe Public Works Design, Construction and Operations Standards, which have been adopted by resolution of the City Council.

W 4.5.6 Satellite Management

The City's Water System does not intend to become a Washington State Department of Health (DOH) approved satellite management agency. Additionally, the City's Water System is not required to be owned or operated by a Satellite Management Agency (SMA) per WAC 246-290-100 (4) as the City's water system was established prior to and its ownership is maintained with reasonable economy and efficiency per WAC 246-290-035.

W 4.5.7 Surcharge for Customers Outside of the City Limits

The water rates for customers outside of the corporate limits of the City are 150 percent of the In-City rate at the time of the preparation of this Plan. A current list of rates can be found in the City of Monroe Fee Schedule F.

W 4.5.8 Formation of Local Improvement Districts

The City has formed local improvement districts to finance the installation of water system improvements in the past. This financing option is available as provided for per RCW 36.94.220 and authorized by the City Council.

W 4.5.9 Urban Growth Areas

A portion of the water service area is within the City's Urban Growth Area. In addition, a portion of the City's Urban Growth Area is not within the City's Water Service Area. In 2021 the City amended the MMC Title 13 to allow for the provision of sanitary sewer service to areas inside the City Limits that are served water by

other purveyors. The North Snohomish County Coordinated Water System Plan[11] requires the City, at its own cost, to upgrade water mains in areas currently served to provide the required water supply for urban levels of service. These additional improvements have been reflected in the City's capital improvement fees.

W 4.5.10 Utility Reimbursement Agreements

The City allows utility reimbursement agreements in accordance with Chapter 13.20 of the Monroe Municipal Code.

W 4.5.11 Oversizing

The minimum main size in the City's Water System is 8 inches. Larger sizes are required in some areas as outlined in the capital improvement section of this Plan. Developers are required to install the size main shown in this plan and in a manner consistent with the City's Design and Construction Standards.

W 4.5.12 Cross-Connection Control Program

The purpose of the City's Cross Connection Control Program is to protect and maintain the bacteriological and chemical quality of the municipal potable water supply by the elimination and prevention of cross connections between the City's potable water distribution system and any water piping arrangement that might threaten the quality of the potable water distribution system. Chapter 13.06 of the Monroe Municipal Code provides the authority for the system's cross-connection control program. Additional information on the cross-connection control program is included in Chapter W 9 – Operations and Maintenance Program.

W 4.5.13 Extension

As a general rule the City's Water System does not proactively extend distribution mains into unserved areas. The City works with developers to bring water service to newly developing areas.

W 4.6 Duty to Serve

The City affirms that it has a duty to serve an applicant for new service within its defined RSA per WAC 246-290-106. The City is committed to providing this service in a timely and reasonable manner, consistent with applicable City resolutions and policies, the Municipal Water Law, DOH rules and regulations and other applicable federal, state, and local laws. Pursuant to RCW 43.20.260, as a municipal water supplier as defined in RCW 90.03.015.

W 4.6.1 Capacity

The City's system assets are itemized in Chapter W 6 – System Analysis and Asset Management of this Water System Plan. This Chapter also outlines system capacity for the existing and future planning horizons.

W 4.6.2 Consistency

Consistency between the City's system, the neighboring systems, and larger governmental partners are important in running the system smoothly. Section W 4.7 includes additional references to inter-governmental consistency documents.

[11] Snohomish County Water Utility Coordinating Committee. 2010. *North Snohomish County Coordinated Water System Plan.* Coordinated Water System Plan, Everett: Snohomish County.

W 4.6.3 Water Rights

The City is a wholesale customer of the City of Everett and does not own any of its own water rights at this time.

W 4.6.4 Timely and Reasonable Service

Timely is defined as water service being available within 120 days after the City receives an application for service and after the City receives payment of the fees and charges for the meter, connection and administrative fees, rates and charges from the property owner, or agent acting on behalf of the property owner, requesting service at the property. Reasonable is defined as water service that is consistent with local land use plans and development regulations.

W 4.7 Local Government Consistency

Local government consistency focuses on meeting the requirements of WAC 246-290-100(7) and WAC 246-290-108 to ensure consistency across the critical bodies that are responsible for decision making that affects the City's water system. The local government consistency determination forms (Form 331-568) applicable to the City's Water System are included as Appendix W-C.

W 4.8 Watershed Consistency

The City's Water System does not own water rights and relies on water from Everett as a wholesale customer. For information related to the water rights in use and the associated watershed planning efforts, please refer to Chapter 6 of the City of Everett Washington 2020 Water Comprehensive Plan[12], specifically Section W 6.8 of this document.

[12] City of Everett and HDR Engineering. 2020. *City of Everett Washington 2020 Comprehensive Water Plan.* Comprehensive Water System Plan, Everett Washington: City of Everett.

THIS PAGE INTENTIONALLY BLANK.

Chapter W 5 Basic Planning Data

W 5.1 Current Population, Service Connections, and Equivalent Residential Units (ERU)

Historical and current population and water demands are necessary to adequately plan for and accommodate future water system needs. WAC 246-294-010(7) defines an equivalent residential unit (ERU) as a "system-specific unit of measure used to express the amount of water consumed by a typical full-time single family residence." Note that discussions around ERUs vary in the preferred language from the City of detached residential and attached residential which is currently referred to as single family residential and multi-family residential respectively in typical Washington State Department of Health (DOH) standards and documentation.

W 5.1.1 Current Population

The latest full year with available water demand data is 2023. Consequently, this year is utilized for determining unit water demands across different demand classifications. Population and employment estimates for 2023 were established using data provided by the Puget Sound Regional Council's (PSRC) LUV-it forecast model for the City's Retail Service Area (RSA) and are summarized in Table W 5-1. The PSRC projections are benchmarked to the adopted county allocations for consistency in planning and provided population and employment forecasts for 2044 and 2050 using a 2018 baseline. PSRC provided population and employment forecast estimates for each pressure zone in the RSA. To obtain projection estimates between 2018 and 2044 and 2050, including for 2023, this analysis used straight line interpolation. In 2023, the Washington State Department of Corrections (DOC) Population was approximately 2,534 inmates based on these projections from PSRC which is in line with the population assumption made in the City's sanitary sewer plan. Future population projections are further discussed in Section W 5.6 of this chapter.

Table W 5-1
2023 PSRC Population and Employment

Description	Retail Service Area
Population	25,402
Employment	13,707

W 5.1.2 Service Connections

The 2023 Water Facilities Inventory (WFI) updated in September 2023 (included in Appendix W-A), indicates the City's RSA served a total of 8,689 connections further summarized in Table W 5-2. Note that the analysis uses the City's 2023 customer billing records which indicate that the City provides service to 7,960 unique billing accounts.

Table W 5-2
2023 WFI Service Connections

Connection Type	Count
Full Time[1] Single Family Residence	6,192
Part Time[2] Single Family Residences	0
Full Time[1] Residential Units in Apartments, Condos, Duplexes, Dorms	1,984
Part Time[2] Residential Units in Apartments, Condos, Duplexes, Dorms	0
Recreational Services and/or Transient Accommodations (Campsites, RV sites, hotel/motel/overnight units)	5
Institutional, Commercial/Business, School, Day Care, Industrial Services, etc.	508
Total Service Connections	**8,689**

Notes:
1) Occupied 180 days or more per year.
2) Occupied less than 180 days per year.

The City's current rates that are effective as of January 1, 2024 as adopted in City's Resolution No. 2023-018, Schedule F Utility Rates. Table W 5-3 includes the rate schedule by meter connection size and includes the water rate descriptions used in the City's customer billing data and the count of meters falling inside of and Outside of the City extent.

Table W 5-3
Utility Rates Summary by Meter Size and Designation

Metered Services (Inches)	In City				Out of City			
	Water Rate Descriptions	Rate Codes	Fee Per Meter	Count of Meters[1]	Water Rate Descriptions	Rate Codes	Fee Per Meter	Count of Meters[1]
3/4 x 5/8	3/4 IC Reg & Sr Water, 3/4 IC Res Water, 3/4 IC Res City Water, 3/4 IC Disc Res Water, 3/4 IC Comm & Res Water, 3/4 IC Comm Water, 3/4 IC Comm City Water	1, 6, 06A, 16, 57, 59, 59A	$ 28.07	5,680	3/4 OC Reg & Sr Water, 3/4 OC Res Water, 3/4 OC Disc Res Water, 3/4 OC Comm Water, 3/4 OC Comm & Res Water, 3/4 OC Res Sky Meadow Water, 3/4 OC Comm Sky Meadow Water	2, 25, 35, 68, 76, 40, 42	$ 42.11	1,257
1	1 IC Reg & Sr Water, 1 IC Res Water, 1 IC Disc Water, 1 IC Comm & Res Water, 1 IC Comm Water, 1 IC Comm City Water	3, 7, 17, 58, 60, 60A	$ 37.28	443	1 OC Res Water, 1 OC Disc Water, 1 OC Comm Water, 1 OC Res Sky Meadow Water, 1 OC Comm Sky Meadow Water	26, 36, 69, 41, 45	$ 55.92	78
1.5	1.5 IC Res Water, 1.5 IC Disc Water, 1.5 IC Comm Water, 1.5 IC Comm Water	8, 18, 61, 61A	$ 42.87	181	1.5 OC Res Water, 1.5 OC Disc Water, 1.5 OC Comm Water, 1.5 OC Comm Sky Meadow Water	27, 37, 70, 46	$ 64.30	10
2	2 IC Res Water, 2 IC Disc Res, 2 IC Comm Water, 2 IC Comm City Water	9, 19, 62, 62A	$ 52.30	144	2 OC Res Water, 2 OC Disc Water, 2 OC Comm Water, 2 OC Comm Sky Meadow Water	28, 38, 71, 47	$ 78.46	11
3	3 IC Res Water, 3 IC Comm Water, 3 IC Comm City Water	10, 63, 63A	$ 63.51	17	3 OC Res Water, 3 OC Comm Water	29, 72	$ 95.26	2
4	4 IC Res Water, 4 IC Comm Water	11, 64	$ 74.42	2	4 OC Res Water, 4 OC Comm Water	30, 73	$ 111.63	-
6	6 IC Res Water, 6 IC Comm Water, 6 IC Comm City Water	12, 65, 65A	$ 307.38	1	6 OC Res Water, 6 OC Comm Water	31, 74	$ 461.08	1
8	8 IC Res Water, 8 IC Comm Water	13, 66	$ 400.57	-	8 OC Res Water, 8 OC Comm Water, 8 OC Compo Water	32, 75, 85	$ 600.85	1
Fire Protection 3/4	3/4 IC Comm Hyd Mtr Water, Fire Protection IC 3/4 Standby	59H, FP134	$ 2.54	2	3/4 OC Comm Hyd Mtr Water, Fire Protection OC 3/4 Standby	68H, FP234	$ 3.82	-
Fire Protection 1	1 IC Comm Hyd Mtr Water, Fire Protection IC 1 Standby, Fire Protection IC 3/4 SB Senior	60H, FP101, FP134S	$ 3.39	9	1 OC Comm Hyd Mtr Water, Fire Protection OC 1 Standby	69H, FP201	$ 5.09	-
Fire Protection 1.5	Fire Protection IC 1.5 Standby	FP1015	$ 3.92	19	Fire Protection OC 1.5 Standby	FP2015	$ 5.89	-
Fire Protection 2	Fire Protection IC 2 Standby	FP102	$ 4.78	16	Fire Protection OC 2 Standby	FP202	$ 7.17	-
Fire Protection 3	3 IC Comm Hyd Mtr Water, Fire Protection IC 3 Standby	63H, FP103	$ 5.79	35	3 OC Comm Hyd Mtr Water, Fire Protection OC 3 Standby	72H, FP203	$ 8.68	3
Fire Protection 4	Fire Protection IC 4 Standby	FP104	$ 6.79	69	Fire Protection OC 4 Standby	FP204	$ 10.19	2
Fire Protection 6	Fire Protection IC 6 Standby	FP106	$ 28.07	46	Fire Protection OC 6 Standby	FP206	$ 42.11	-
Fire Protection 8	Fire Protection IC 8 Standby	FP108	$ 36.58	13	Fire Protection OC 8 Standby	FP208	$ 54.87	-

Note:
1) Meter Counts included are from 2021 and have not substantially changed in distribution.

THIS PAGE INTENTIONALLY BLANK.

W 5.1.3 Equivalent Residential Units (ERUs)

Water demand varies between different land uses, and it is convenient to convert all of the different types of water users into equivalent ERUs. According to WAC 246-290-101, an ERU is "a system-specific unit of measure used to express the amount of water consumed by a typical full-time single family residence". The City's billing data is driven by connection meter size, which is considered in the determination of land use type and ERU derivations. For consistency with industry standard terminology, ERU is used with the understanding that it has implications for meter size more so than land use for this system. For 2023, water consumption, number of connections, and equivalent residential units per consumption category are shown in Table W 5-4 for Average Day Demand (ADD). Applying the population against the number of attached and detached residential connections and the employment against the number of non-residential connections and then normalizing the value from employment per connection by the population per connection, employment can be converted to population at a rate of approximately 2.33 employees per 1 population (2.33:1).

Table W 5-4
2023 Water Consumption and ERU_{ADD}

Consumption Category	ADD (gpd)	Metered Connections	ADD Per Connection (gpd)	ERU_{ADD} Per Connection	Sum of Equivalent ERU_{ADD}
Detached Residential (SFR)	934,933	6,044	154.7	1.0	6,044
Attached Residential (MFR)	168,561	261	645.8	4.2	1,090
Non-Residential[1]	913,511	1,655	552.0	3.6	5,906
Hydrants, Documented Leaks, & Flushing	2,517	-	-	-	16
Water Loss	144,749	-	-	-	936
Total	**2,164,271**	**7,960**	**-**	**-**	**13,992**

Note:
1) Note that the City bills mixed Nonresidential / Residential customers at Nonresidential customer rates.

Using the calculation setup shown in Table W 5-4 was applied to all of the years from 2014 through 2023 and the calculated ERU_{ADD} in gpd is shown in Table W 5-5 below with Figure W 5-1 adding the historical ERU_{ADD} from the previous plan to show the historical trend in ERU_{ADD}.

Averaging the calculated ERU_{ADD} for 2019-2023, a value of 154.6 gallons per connection per day is determined. Considering the conversion of employment to population and the number of connections in the system, each ERU accounts for approximately 2.23 equivalent population. These high-level relationships provide a translation from population and employment to equivalent population and then into system demand values for planning purposes on a pressure zone level.

Table W 5-5
Derived ERUs From 2014 - 2023

Year	Detached Residential ADD (gpd)	Detached Residential Connections	ERU_{ADD} (gpd)
2014	782,143	4,859	161
2015	840,288	4,915	171
2016	773,363	5,397	143
2017	877,507	5,250	167
2018	846,380	5,387	157
2019	846,405	5,561	152
2020	883,087	5,677	156
2021	927,523	5,810	160
2022	894,445	5,953	150
2023	934,933	6,044	155

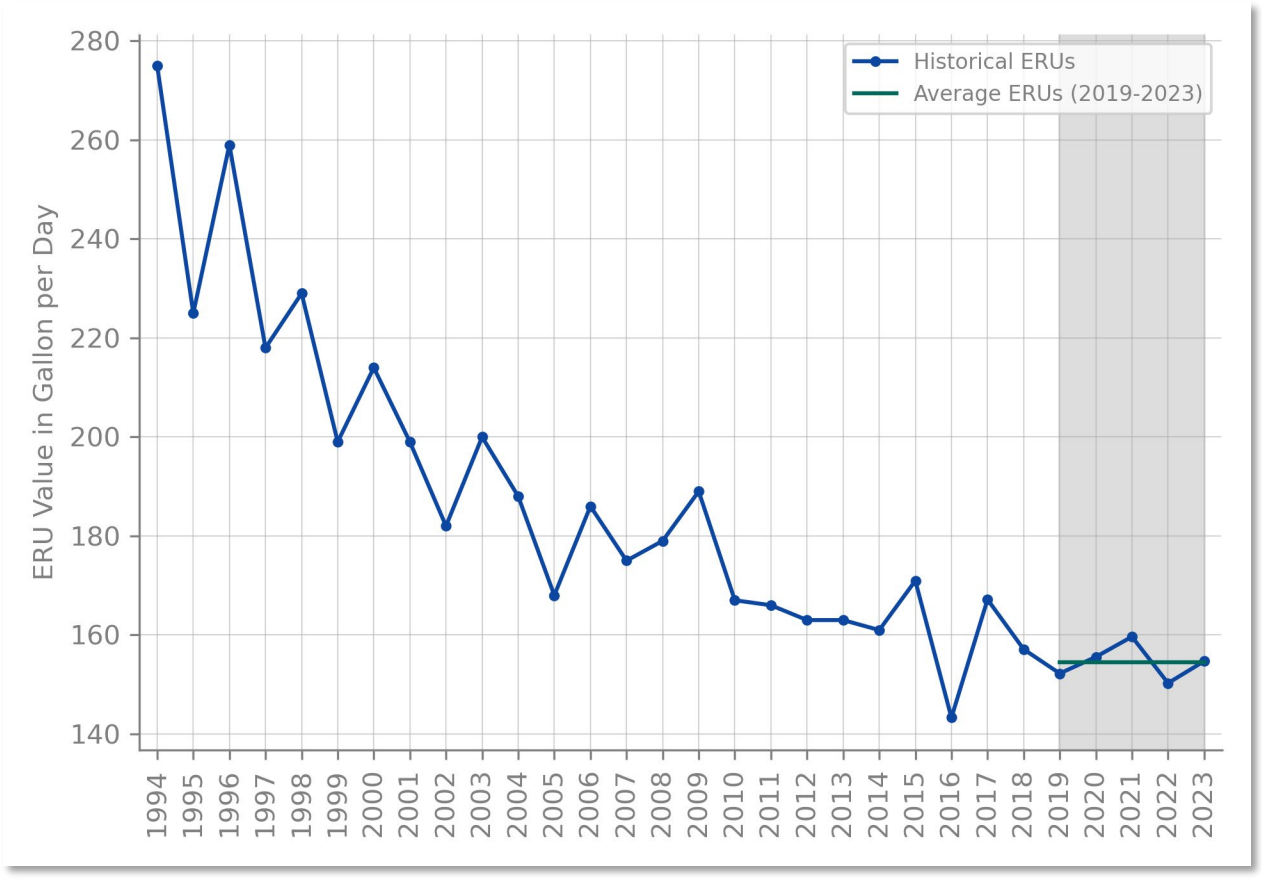

Figure W 5-1 Historical ERUs (ADD)

Average Daily Demands (ADD) and Maximum Daily Demands (MDD) over the past five years are summarized in Table W 5-6. Note that the ADD for 2021 and 2022 are lower than the other included years due to City of Everett wholesale master metering issues that resulted in negative metered water loss values. These lower ADD values bias the peaking factors for 2021 and 2022 to be higher than the other years. Figure W 5-2 shows the ADD as calculated from the PSRC population converted to demand using the population equivalence per ERU.

As the negative water loss in 2021 was much larger than 2022, the analysis maintains a conservative position by basing the ADD to MDD peaking factor as the average of 2019, 2020, 2022 and 2023 for a peaking factor of 1.81. This results in an ERU_{MDD} of 279.8 Gallons Per Capita Per Day (GPCPD). The total system Peak Hour Demand (PHD) calculated with Equation W 5-1 and divided by the total system MDD yields the system peaking factor of 1.62 to convert from MDD to PHD. Note that this peaking factor was calculated for each of the planning horizons, and each resulted in a peaking factor that rounds to 1.62.

Table W 5-6
Historical ADD and MDD Annual Summary

Year	ADD (MGD)	MDD (MGD)	Max Day	MDD/ADD Factor
2019	2.12	3.45	7/22/2019	1.63
2020	2.12	3.64	8/17/2020	1.71
2021	1.77	4.76	6/3/2021	2.70
2022	1.83	3.69	8/3/2022	2.02
2023	2.16	4.06	7/19/2023	1.87

Equation W 5-1
PHD calculation from DOH Water System Design Manual[1] (WSDM)

$$PHD = \left(\frac{ERU_{MDD}}{1440}\right)[(C * N) + F] + 18$$

Note: The City has more than 500 ERUs; C=1.6, F=225 from Table 3-1 in the DOH WSDM. N is the number of ERUs in the system.

[1] Washington State Department of Health. (2020). *Water System Design Manual*. Washington State Department of Health.

THIS PAGE INTENTIONALLY BLANK.

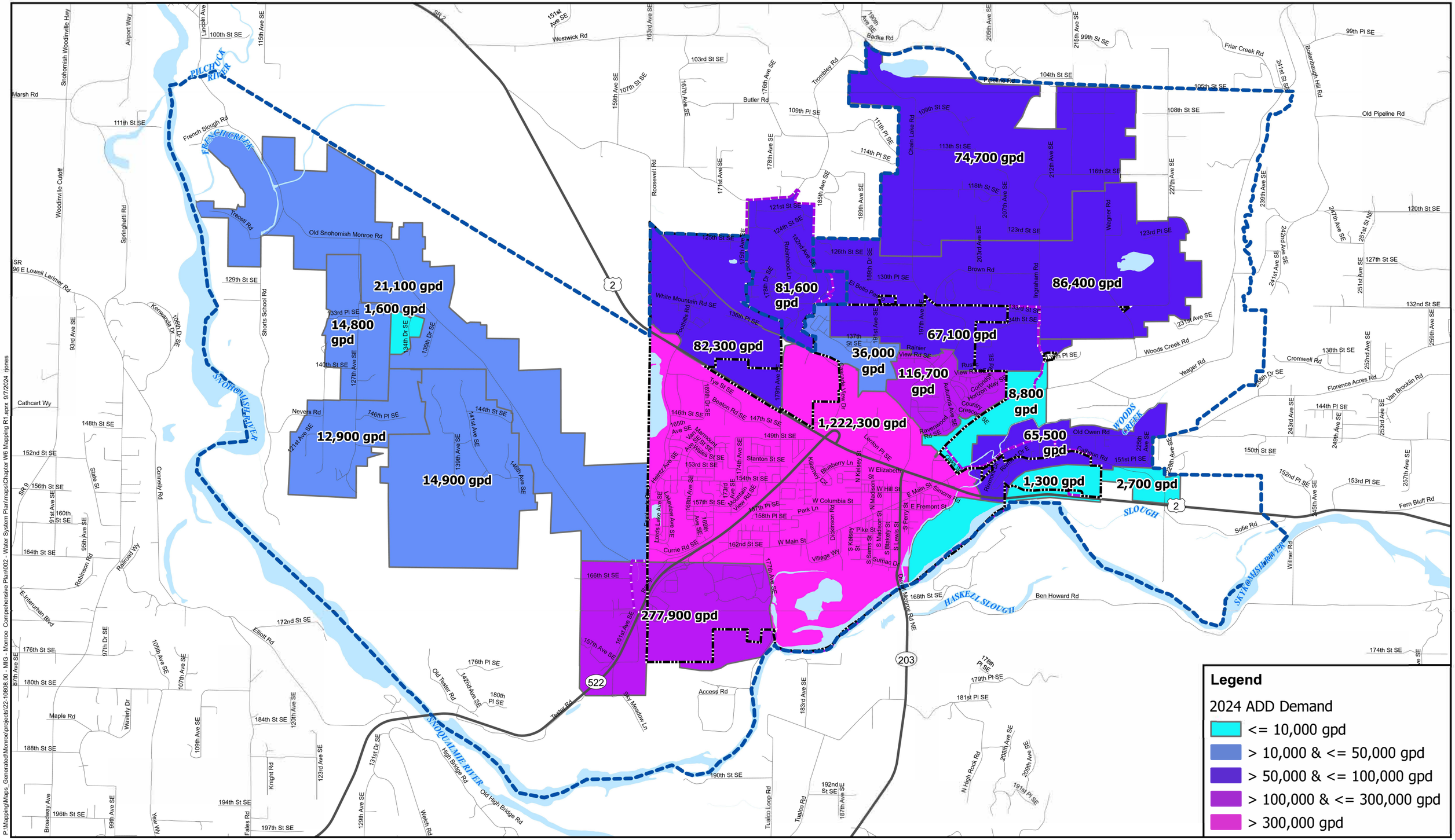

P:\Mapping\Maps_Generated\Monroe\projects\22-10808.00 - MIG - Monroe Comprehensive Plan\002 - Water System Plan\maps\Chapter W6 Mapping R1.aprx 9/7/2024 rjones

Water System: City of Monroe 2024

Snohomish County base data 2024

Data sources supplied may not reflect current or actual conditions. This map is a geographic representation based on information available. It does not represent survey data. No warranty is made concerning the accuracy, currency, or completeness of data depicted on this map.
BHC Consultants LLC., assumes no responsibility for the validity of any information presented herein, nor any responsibility for the use or misuse of the data.

N

0 0.5 1 2 Miles

2024 ADD Demand

Utility Systems Plan - Water
City of Monroe, Washington
September 2024

Figure

W 5-2

COPYRIGHT © 2024 BHC CONSULTANTS LLC., ALL RIGHTS RESERVED

THIS PAGE INTENTIONALLY BLANK.

W 5.2 Water Production and Usage

Per WAC 246-290-100(4), this section documents important system usage information since the previous water system plan. The Monthly reads for 2023 at each of the system interties are documented in Table W 5-7 and the annual reads for the system interties from 2014-2023 are included in Table W 5-8. The monthly total source inflow is included later in this section along with customer records.

Table W 5-7
2023 Monthly Reads

Read Start – Read End	Chain Lake Tap (CCF)	Wagner Road Tap (CCF)	Monroe / North Hill Tap (CCF)	Sum (CCF)
12/15/2022-1/15/2023	17,957	50,158	4,231	72,346
1/15/2023-2/15/2023	15,191	52,293	4,961	72,445
2/15/2023-3/15/2023	15,184	44,010	4,583	63,777
3/15/2023-4/15/2023	18,027	48,935	3,905	70,867
4/15/2023-5/15/2023	20,890	50,155	3,632	74,677
5/15/2023-6/15/2023	31,436	70,004	4,689	106,129
6/15/2023-7/15/2023	31,122	80,020	5,438	116,580
7/15/2023-8/15/2023	40,882	88,674	6,257	135,813
8/15/2023-9/15/2023	36,272	76,783	5,187	118,242
9/15/2023-10/15/2023	24,768	55,043	3,376	83,187
10/15/2023-11/15/2023	22,550	48,887	3,134	74,571
11/15/2023-12/15/2023	20,426	43,889	3,072	67,387

Table W 5-8
Annual Production by Everett Tap and Total

Year	Chain Lake Tap (CCF)	Wagner Road Tap (CCF)	Monroe / North Hill Tap (CCF)	Sum (CCF)
2014	335,377	587,068	69,841	992,286
2015	388,217	641,723	35,727	1,065,667
2016	347,338	685,808	26,959	1,060,105
2017	360,555	712,835	46,382	1,119,772
2018	329,031	685,367	34,841	1,049,239
2019	294,839	709,076	31,544	1,035,459
2020	265,402	734,700	38,654	1,038,756
2021	142,056	667,897	51,436	861,389
2022	256,099	579,301	55,446	890,846
2023	294,705	708,851	52,465	1,056,021

Note that from this data, the total production in 2021 and 2022 are relatively low compared to other years. The Chain Lake meter was offline for part of 2021, and the Wagner Road meter was offline for part of 2021 and 2022 leading to these years having smaller system usages.

Figure W 5-3 shows a combination violin and box and whisker plot and annual average for the Chain Lake meter reads as the influence of the meter being out of service in 2021 is more notable than the Wagner Road tap.

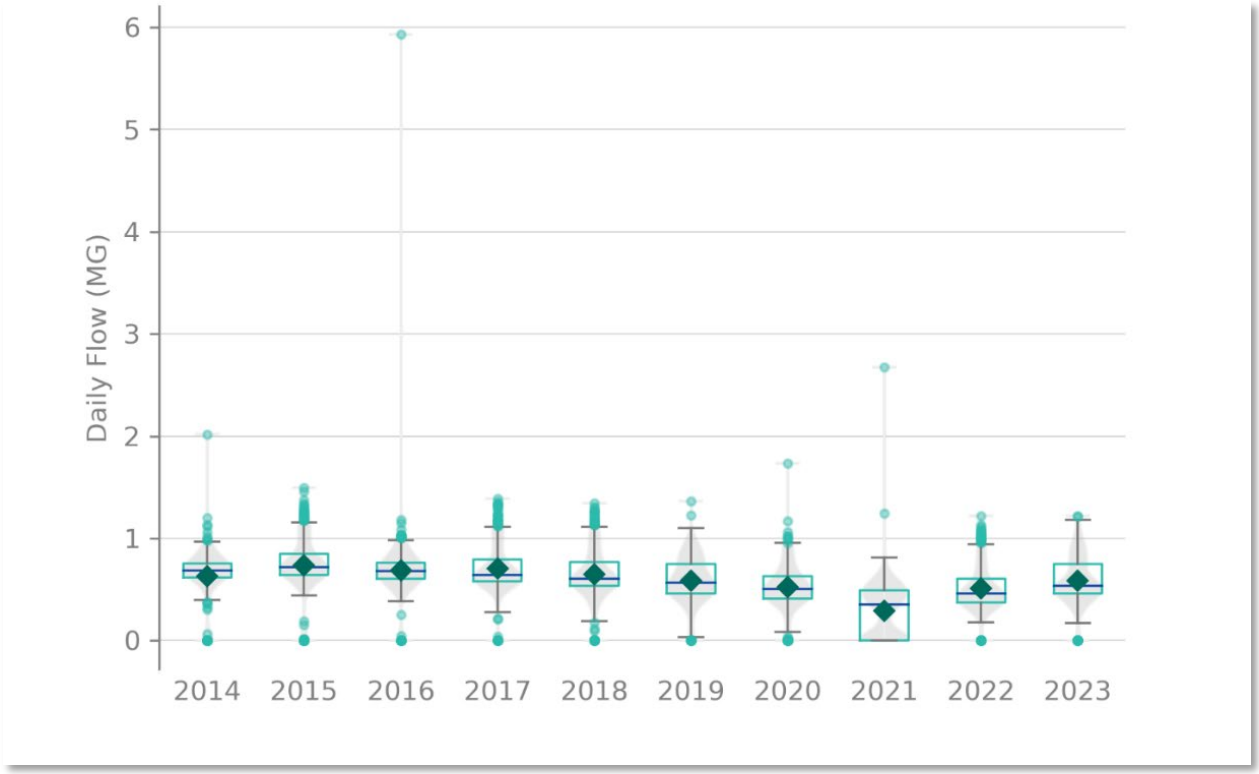

Figure W 5-3 Chain Lake Annual Summary

In addition to purchased data, the customer usage data was used to assess the consumption by customer class on an annual basis in Table W 5-9.

Table W 5-9
Annual Usage Total by Customer Class

Year	Attached Residential (CCF)	Detached Residential (CCF)	Non-Residential (CCF)	Hydrants Leaks Flushing (CCF)	Water Loss (CCF)	Total (CCF)
2014	381,634	72,506	465,308	9,179	63,659	992,286
2015	410,005	72,789	518,188	11,054	53,631	1,065,667
2016	393,280	81,939	525,509	4,975	80,854	1,060,105
2017	429,133	80,771	523,221	6,329	80,318	1,119,772
2018	412,977	78,872	490,383	8,068	58,938	1,049,239
2019	412,988	79,765	464,884	12,907	64,915	1,035,459
2020	430,888	81,714	422,653	7,622	95,879	1,038,756
2021	452,570	82,780	440,813	4,584	(119,358)	861,389
2022	436,156	82,030	412,464	7,315	(47,120)	890,846
2023	456,185	82,246	445,733	1,228	70,628	1,056,021

The City does not supply water to other public water systems. Table W 5-10 shows the monthly consumption by customer class for 2013 and Figure W 5-4 shows the seasonality in monthly consumption graphically for all years from 2014 through 2023.

Note: Master meter errors in 2021 and 2022 result in erroneous datapoints during this period; however, this range conveys system seasonality and adequately captures trends over the time-period that is analyzed..

Table W 5-10
2023 Usage by Customer Category

Month	Attached Residential (CCF)	Detached Residential (CCF)	Non-Residential (CCF)	Hydrants Leaks Flushing (CCF)	Water Loss (CCF)	Total (CCF)
Jan	32,057	6,430	27,228	56	6,575	72,346
Feb	30,274	6,667	27,976	22	7,506	72,445
Mar	27,525	5,987	24,795	380	5,090	63,777
Apr	30,661	6,608	27,507	60	6,031	70,867
May	34,336	6,612	30,239	170	3,320	74,677
Jun	48,218	6,971	48,206	211	2,522	106,129
Jul	53,140	7,279	53,582	5	2,574	116,580
Aug	58,367	7,792	62,470	239	6,946	135,813
Sep	47,700	7,570	56,291	18	6,663	118,242
Oct	32,859	6,892	34,408	67	8,961	83,187
Nov	31,033	6,899	27,301	-	9,338	74,571
Dec	30,016	6,540	25,729	-	5,102	67,387

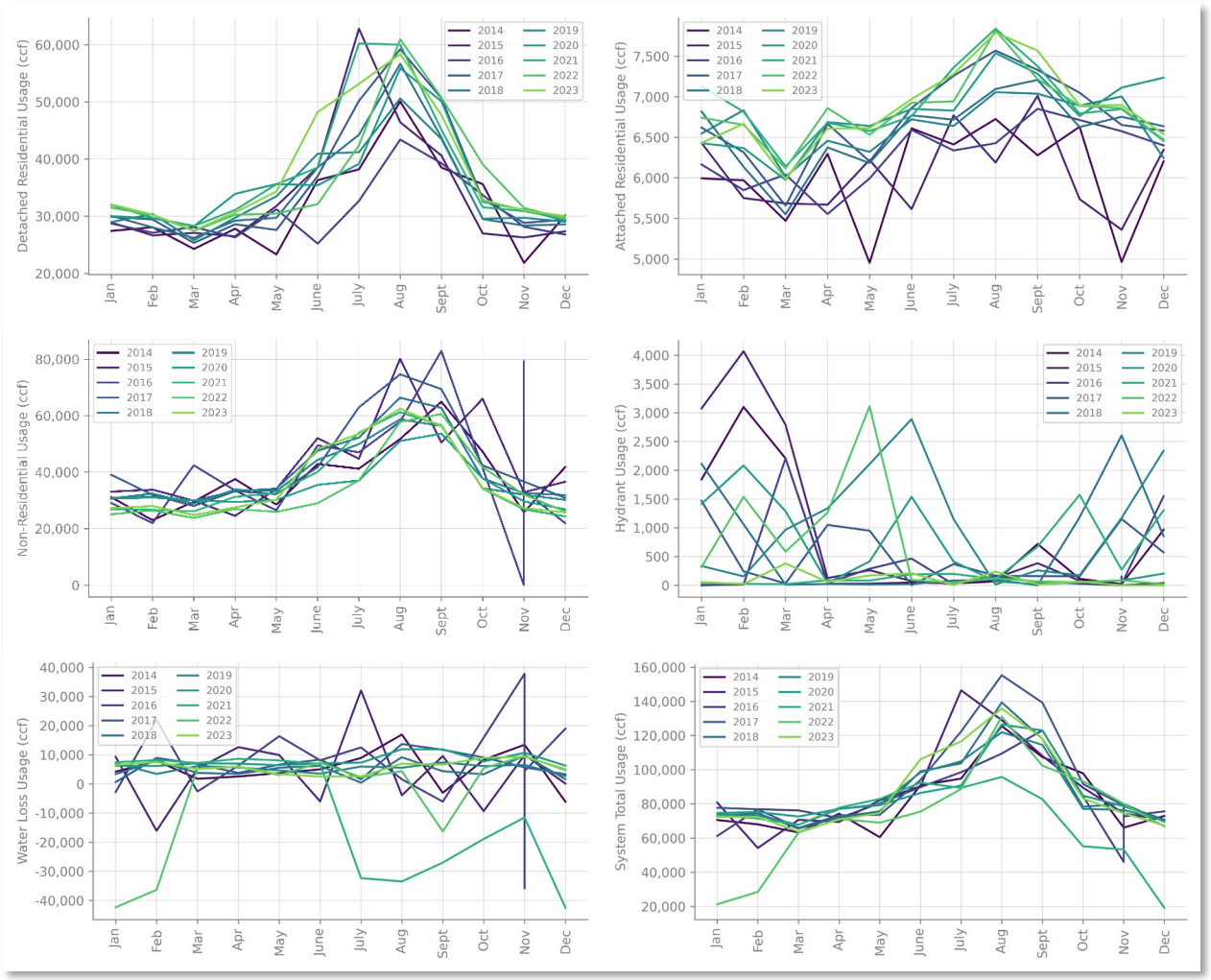

Figure W 5-4 Seasonal Variation by Customer Type

W 5.3 Distribution System Leakage

The City purchases all of their water from Everett as a wholesale customer. Annual water purchases and overall metered demands for the period spanning 2014 to 2023 is shown in Table W 5-11. Neglecting 2021 and 2022 due to metering issues, the average water loss for 2019-2023 is 7.4 percent.

Table W 5-11
Historical Annual Water Demand

Year	Annual Total Purchased From Everett (gallons)	Average Daily Demand (gpd)	City Meter Totals (gpd)	Hydrants, Documented Leaks, & Flushing (gpd)	Water Loss (gpd)	Water Loss (%)
2014	742,281,527	2,033,648	1,884,370	18,812	130,466	6.4
2015	797,174,331	2,184,039	2,051,470	22,655	109,914	5.0
2016	793,013,665	2,166,704	1,991,282	10,168	165,254	7.6
2017	837,647,684	2,294,925	2,117,346	12,971	164,608	7.2
2018	784,885,332	2,150,371	2,013,045	16,535	120,791	5.6
2019	774,577,176	2,122,129	1,962,636	26,452	133,041	6.3
2020	777,043,503	2,123,070	1,911,528	15,578	195,963	9.2
2021	644,363,764	1,765,380	2,000,605	9,395	-244,619	-13.9
2022	666,399,132	1,825,751	1,907,330	14,992	-96,570	-5.3
2023	789,958,621	2,164,270	2,017,004	2,517	144,749	6.7

W 5.4 Water Supply Characteristics

The City's water is supplied by the City of Everett via Transmission Main No. 5 whose source is a combination of the Chaplain Reservoir and the Spada Reservoir which are treated at the Everett Water Filtration Plant. For additional information on the source of supply and these supply characteristics, water rights and source water protections, please refer to the City of Everett Washington 2020 Comprehensive Water Plan[2].

W 5.5 Water Supply Reliability Evaluation

The City of Everett Washington 2020 Comprehensive Water handles issues related to source water quantity and reliability as well as spring and surface water safe yield. Given the topography and geology of the City's system, there are not presently concerns related to seawater intrusion.

These interties are all to the City of Everett's Transmission Main No. 5 and are permanent metered connections in compliance with WAC 246-290-496(1)(e). The City does not have an intertie agreement with the City of Everett and is instead a wholesale customer to the City of Everett with no limited service agreement at this time. Background and descriptions of the interties between the City of Everett and the City are outlined in Table W 5-12. The City does not have any emergency interties with any adjacent purveyors but is in talks with Highland Water District to develop a temporary emergency intertie in the Rivmont / Calhoun 330 pressure zone at Old Owen Road and 220th Avenue SE.

Table W 5-12
Intertie Descriptions

Description	Chain Lake Road	Wagner	North Hill
Intertie Location	18901 100th St. SE Monroe WA 98272 NW1/4-NE1/4 Section 24, T28N, R06E	107 St. SE & 219 Ave. SE Monroe WA 98272 SW1/4-NE1/4 Section 20, T28N, R07E	20218 Pipeline Rd. Monroe WA 98272 NE1/4-NW1/4 Section 19, T28N, R07E
Approximate Date of First Use	1978	1963	2004
Physical and Legal Capacity	2,880 gpm	2,080 gpm	2,000 gpm
Pressure Zone Served	Wagner 517	Wagner 517	North Hill 635
Type of Intertie Control	None[1]	None[1]	North Hill Pump Station
Intertie Meter, Backflow Protection, and Sample Tap on the Downstream Side of the Meter	Yes	Yes	Yes

Note:
1) The Chain Lake Road and Wagner Taps are metered connections that do not have controls yielding pressures in the Wagner 517 zone that are set by the pressure in the City of Everett Transmission Main No. 5.

[2] City of Everett and HDR Engineering. (2020). *City of Everett Washington 2020 Comprehensive Water Plan.* Everett Washington: City of Everett.

W 5.6 Future Population Projections and Land Use

W 5.6.1 Future Land Use

The City's Retail Service Area (RSA) encompasses most of the City's Urban Growth Area (UGA) and extends into unincorporated Snohomish County. This Water System Plan Update is being developed concurrently with the City's 2044 Comprehensive Plan Update . Future land use changes are accounted for by comparing PSRC projections with total projected buildable land capacity given future land use changes for the incorporated City for 2044. Significant land use change is not anticipated for the unincorporated Snohomish County rural lands.

W 5.6.2 Projected Populations

Residential and employment population projections were developed for the City's Retail Service Area for 2044 using PSRC's LUV-it forecast model. The PSRC's LUV-it model inputs regional forecasts, growth targets, and land uses to project population growth.[3] For both residential and employment populations, PSRC used 2018 as a baseline. The baseline, existing population for 2023, and forecast for 2044 are summarized in Table W 5-12 above. Using straight line interpolation, BHC established the population estimates for the intervening years between 2023 and 2044.

Since the land capacity population and employment projections were confined to City's incorporated boundaries, this analysis used PSRC numbers. There were no discrepancies or significant differences that warranted blending the land capacity and PSRC projection models. Although blending the models was an option, it would have led to a total RSA population projection inconsistent with countywide targets due to the different assumptions and uses of each model.

Projected Residential Population

For the City's UGA, Countywide Planning Policies for Snohomish County adopted a 2044 Population Growth Target of 26,276. The PSRC's LUV-it projections are benchmarked to these county population targets for consistency. The forecasted residential populations for the RSA are shown below in Table W 5-13.

Projected Employment Population

For the City's UGA, Countywide Planning Policies for Snohomish County adopted a 2044 Employment Growth Target of 12,660. The baseline employment populations for the City's current and retail water service areas, as well as projections for the years 2023 and 2044, are shown in Table W 5-13.

[3] Puget Sound Regional Council (PSRC). "Documentation: Land Use Vision – Implemented Targets (LUV-It) Land Use Forecast Product." PSRC, May 2023.

Table W 5-13
Population and Employment by Year

Year	Population	Employment	Equivalent Population
2023	25,402	13,707	31,285
2024	25,628	13,808	31,554
2025	25,853	13,909	31,823
2026	26,079	14,011	32,092
2027	26,304	14,112	32,361
2028	26,530	14,213	32,630
2029	26,755	14,314	32,898
2030	26,981	14,416	33,168
2031	27,206	14,517	33,436
2032	27,431	14,618	33,705
2033	27,657	14,719	33,974
2034 (10-year)	27,882	14,820	34,243
2035	28,108	14,922	34,512
2036	28,333	15,023	34,781
2037	28,559	15,124	35,050
2038	28,784	15,225	35,318
2039	29,010	15,326	35,588
2040	29,235	15,428	35,856
2041	29,461	15,529	36,126
2042	29,686	15,630	36,394
2043	29,912	15,731	36,664
2044 (20-years)	30,232	15,966	37,084
2050	31,413	16,331	38,422

W 5.7 Future Water Demand

W 5.7.1 Projected Water Demand Without Water Use Efficiency

Based on the calculations for ERUs averaged from 2019-2023, the system ERU_{ADD}s are currently approximately 154.6 gallons per connection per day. Based on a comparison between the number of connections and the equivalent population (assuming a 2.33:1 conversion from employees to population), each connection represents the water contribution of approximately 2.23 persons (different calculation from employment equivalence). Using the equivalent population data from Table W 5-13, Table W 5-14 calculates the system ADD without Water Use Efficiency (WUE).

There are no expected changes at this time that would fundamentally change the percent contribution to the customer make up by land use. Based on the agreement between the City and the City of Everett, the demand requirements for the City will not be met in the next 20 years.

For planning purposes, the system average DSL for 2019-2023 of 7.4 percent is carried forward into the future inherently through the relationship of ERU to population. Table W 5-11 shows the calculated volume of water loss assuming this 7.4 percent rate is carried forward, which is likely conservative. The demand for the 2050 ADD based on the PSRC analysis and the ERU determination is shown in Figure W 5-5 and the increase in ADD from the 2024 planning horizon to the 2050 planning horizon is shown in Figure W 5-6 based on the PSRC analysis and ERU determination.

W 5.7.2 Projected Water Demand With Water Use Efficiency

The City maintains an ongoing water use efficiency program in recognition of the significant demands that population growth is placing on the Puget Sound regional water supply. Efficient use of the existing supply is a central component of sustaining the City's needs. The goal of the water use efficiency program is to eliminate waste and encourage the City's customers to use water wisely, thereby reducing per capita use on a long-term basis. Additional considerations and discussion related to projected water use for the next 20 years is explored in Chapter W 7 Water Use Efficiency.

Based on the analysis of the historical ERUs included in Figure W 5-1, the City's ERUs have decreased by approximately 40 percent from 1998 to 2023. This reduction has been, in part, due to water use efficiency measures and serves as documentation that the City's water use efficiency efforts are successful. The water use efficiency program will continue to evolve to support the goals of the City and in keeping with the goals of the City of Everett's Conservation Program. Through discussions and aspirations moving into the future, Table W 5-15 outlines the city's projected water demand with water use efficiency. These population projections assume a 5 percent reduction in usage in a 10-year period with a reduction of 10 percent assumed in the 20-year planning horizon, which is equivalent to a reduction of approximately 0.51 percent per year for high level planning purposes. Future water system plans will adjust these projections based on actual demand reductions extending the cycle of continuous improvement.

Table W 5-14
Annual Water Demand Projections Without WUE

Year	Equivalent Population	Count of ERUs	Demand Projection without WUE					
			System ADD (gpd)	Detached Residential ADD (gpd)	Attached Residential ADD (gpd)	Non-Residential ADD (gpd)	Hydrants, Documented Leaks, Flushing ADD (gpd)	DSL ADD (gpd)
2023	31,285	14,029	2,168,906	936,883	168,961	900,082	2,480	160,499
2024	31,554	14,150	2,187,555	944,939	170,414	907,822	2,501	161,879
2025	31,823	14,270	2,206,204	952,995	171,867	915,561	2,523	163,259
2026	32,092	14,391	2,224,853	961,050	173,320	923,300	2,544	164,639
2027	32,361	14,512	2,243,503	969,106	174,773	931,039	2,565	166,019
2028	32,630	14,632	2,262,152	977,162	176,225	938,779	2,587	167,399
2029	32,898	14,752	2,280,731	985,187	177,673	946,489	2,608	168,774
2030	33,168	14,874	2,299,450	993,273	179,131	954,257	2,629	170,159
2031	33,436	14,994	2,318,029	1,001,299	180,578	961,968	2,651	171,534
2032	33,705	15,114	2,336,678	1,009,354	182,031	969,707	2,672	172,914
2033	33,974	15,235	2,355,328	1,017,410	183,484	977,446	2,693	174,294
2034	34,243	15,356	2,373,977	1,025,466	184,937	985,185	2,715	175,674
2035	34,512	15,476	2,392,626	1,033,521	186,390	992,925	2,736	177,054
2036	34,781	15,597	2,411,275	1,041,577	187,842	1,000,664	2,757	178,434
2037	35,050	15,717	2,429,924	1,049,633	189,295	1,008,403	2,779	179,814
2038	35,318	15,838	2,448,503	1,057,658	190,742	1,016,114	2,800	181,189
2039	35,588	15,959	2,467,222	1,065,744	192,201	1,023,882	2,821	182,574
2040	35,856	16,079	2,485,802	1,073,770	193,648	1,031,592	2,843	183,949
2041	36,126	16,200	2,504,520	1,081,855	195,106	1,039,360	2,864	185,334
2042	36,394	16,320	2,523,100	1,089,881	196,554	1,047,071	2,885	186,709
2043	36,664	16,441	2,541,818	1,097,967	198,012	1,054,839	2,907	188,095
2044	37,084	16,630	2,570,936	1,110,544	200,280	1,066,922	2,940	190,249
2050	38,422	17,230	2,663,696	1,150,613	207,506	1,105,417	3,046	197,113

THIS PAGE INTENTIONALLY BLANK.

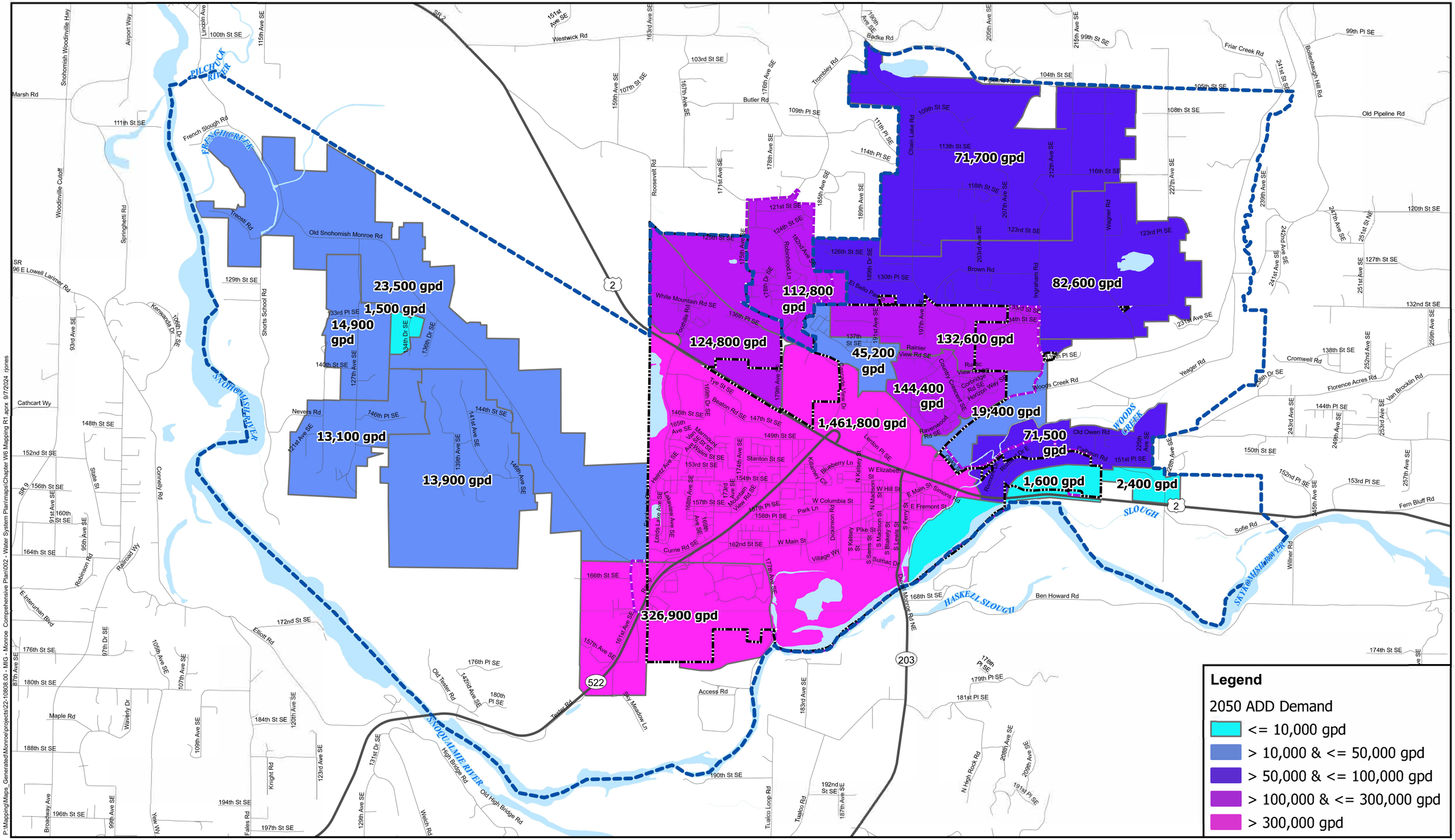

Water System: City of Monroe 2024

Snohomish County base data 2024

Data sources supplied may not reflect current or actual conditions. This map is a geographic representation based on information available. It does not represent survey data. No warranty is made concerning the accuracy, currency, or completeness of data depicted on this map.
BHC Consultants LLC., assumes no responsibility for the validity of any information presented herein, nor any responsibility for the use or misuse of the data.

2050 ADD Demand

Utility Systems Plan - Water
City of Monroe, Washington
September 2024

Figure

W 5-5

COPYRIGHT © 2024 BHC CONSULTANTS LLC., ALL RIGHTS RESERVED

P:\Mapping\Maps_Generated\Monroe\projects\22-10808.00 - MIG - Monroe Comprehensive Plan\002 - Water System Plan\maps\Chapter W6 Mapping R1.aprx 9/7/2024 rjones

THIS PAGE INTENTIONALLY BLANK.

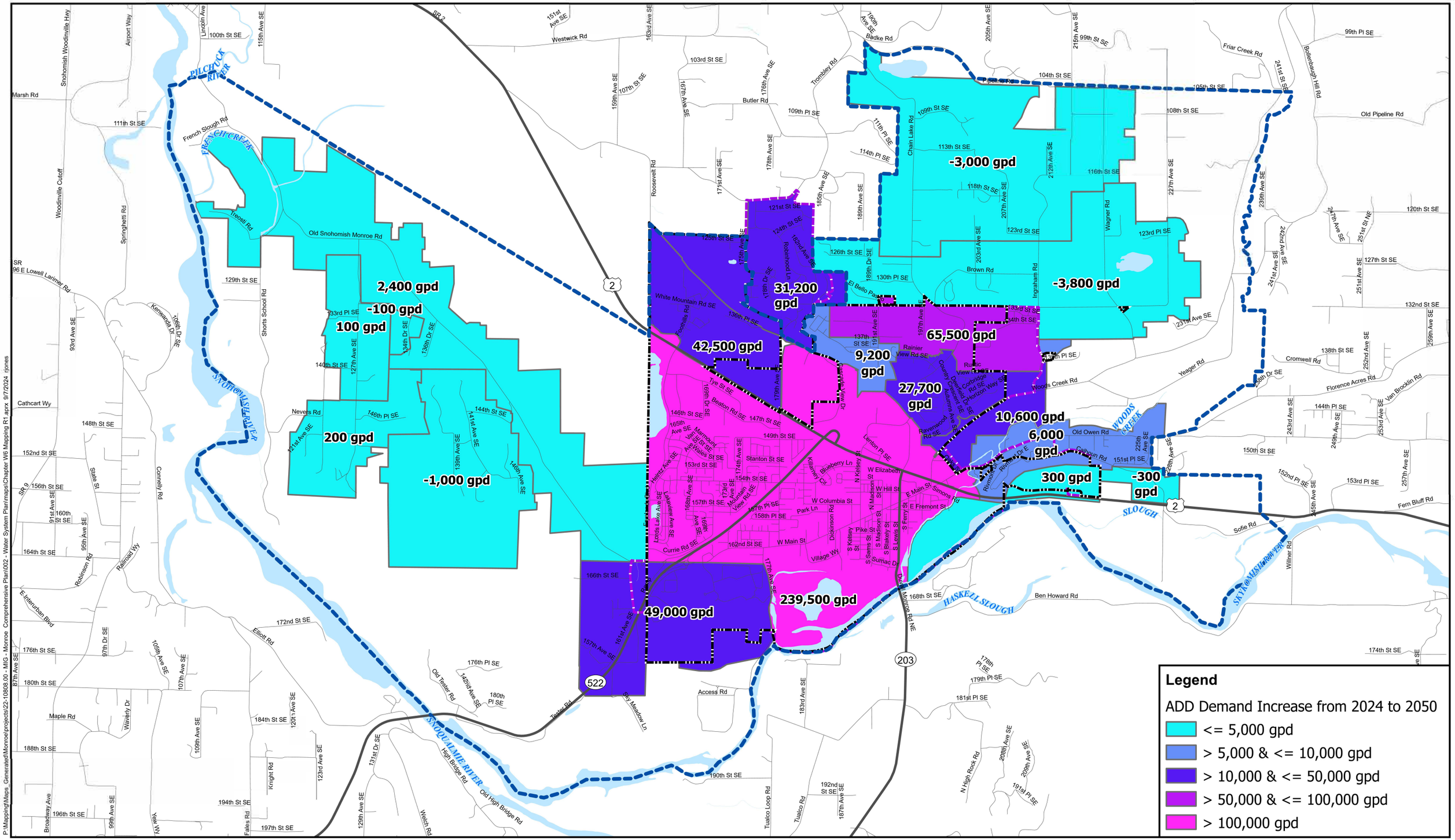

P:\Mapping\Maps_Generated\Monroe\projects\22-10808.00 - MIG - Monroe Comprehensive Plan\002 - Water System Plan\maps\Chapter W6 Mapping R1.aprx 9/7/2024 rjones

Water System: City of Monroe 2024

Snohomish County base data 2024

Data sources supplied may not reflect current or actual conditions. This map is a geographic representation based on information available. It does not represent survey data. No warranty is made concerning the accuracy, currency, or completeness of data depicted on this map.
BHC Consultants LLC., assumes no responsibility for the validity of any information presented herein, nor any responsibility for the use or misuse of the data.

N

0 0.5 1 2 Miles

bhc CONSULTANTS

MONROE WASHINGTON

ADD Demand Increase from 2024 to 2050

Utility Systems Plan - Water
City of Monroe, Washington
September 2024

Figure

W 5-6

COPYRIGHT © 2024 BHC CONSULTANTS LLC., ALL RIGHTS RESERVED

THIS PAGE INTENTIONALLY BLANK.

Table W 5-15
Annual Water Demand Projections With WUE

Year	Equivalent Population	Count of ERUs	Demand Projection with WUE						
			ERU_{ADD} with WUE	System ADD (gpd)	Detached Residential ADD (gpd)	Attached Residential ADD (gpd)	Non-Residential ADD (gpd)	Hydrants, Documented Leaks, Flushing ADD (gpd)	DSL ADD (gpd)
2023	31,285	14,029	154.6	2,168,906	936,883	168,961	900,082	2,480	160,499
2024	31,554	14,150	153.8	2,176,377	940,110	169,543	903,183	2,489	161,052
2025	31,823	14,270	153.0	2,183,715	943,280	170,115	906,228	2,497	161,595
2026	32,092	14,391	152.2	2,190,920	946,392	170,676	909,218	2,505	162,128
2027	32,361	14,512	151.5	2,197,996	949,449	171,228	912,154	2,513	162,652
2028	32,630	14,632	150.7	2,204,941	952,449	171,769	915,037	2,521	163,166
2029	32,898	14,752	149.9	2,211,691	955,365	172,294	917,838	2,529	163,665
2030	33,168	14,874	149.2	2,218,449	958,284	172,821	920,642	2,537	164,165
2031	33,436	14,994	148.4	2,224,946	961,090	173,327	923,339	2,544	164,646
2032	33,705	15,114	147.6	2,231,385	963,872	173,829	926,011	2,552	165,123
2033	33,974	15,235	146.9	2,237,701	966,600	174,321	928,632	2,559	165,590
2034	34,243	15,356	146.1	2,243,893	969,275	174,803	931,202	2,566	166,048
2035	34,512	15,476	145.4	2,249,964	971,897	175,276	933,721	2,573	166,497
2036	34,781	15,597	144.6	2,255,914	974,467	175,739	936,190	2,580	166,938
2037	35,050	15,717	143.9	2,261,745	976,986	176,194	938,610	2,586	167,369
2038	35,318	15,838	143.2	2,267,393	979,425	176,634	940,954	2,593	167,787
2039	35,588	15,959	142.4	2,273,051	981,870	177,074	943,302	2,599	168,206
2040	35,856	16,079	141.7	2,278,466	984,209	177,496	945,549	2,605	168,606
2041	36,126	16,200	141.0	2,283,893	986,553	177,919	947,801	2,612	169,008
2042	36,394	16,320	140.3	2,289,078	988,793	178,323	949,953	2,618	169,392
2043	36,664	16,441	139.5	2,294,277	991,038	178,728	952,110	2,624	169,776
2044	37,084	16,630	138.8	2,308,700	997,269	179,852	958,096	2,640	170,844
2050	38,422	17,230	134.6	2,319,591	1,001,973	180,700	962,616	2,652	171,650

THIS PAGE INTENTIONALLY BLANK.

Chapter W 6 System Analysis and Asset Management

W 6.1 Asset Management

The City's facilities and assessment of their capacity and expected service life are critical to system planning for understanding the system and managing the system assets. The major facilities of the City's water system are shown in Figure W 6-1 with a system hydraulic profile included as Figure W 6-2. The City's asset inventory and asset management are tracked with the City's Geographic Information System (GIS) and Brightly asset management software. The system assets are updated in a continuous process routinely updating system asset information for all water, sanitary sewer, and stormwater utility assets. The City is currently undergoing a substantial GIS update to better reflect the system; this effort is expected to be completed in 2025. The City's water main leaks, breaks, and failures as well as low pressure customer complaints and discolored and odiferous water customer complaints from 2015 through 2023 are included in Chapter W 9 – Operations and Maintenance Program.

The City currently purchases water from the City of Everett. The City of Everett supply system consists of the Spada Reservoir, an impounding reservoir located at the source of the supply in the Sultan River Basin, a diversion facility located downstream from the Spada Reservoir that diverts the flow in the Sultan River to the Lake Chaplain Equalizing Reservoir, and transmission pipelines extending westward. The City of Everett Water Filtration Plant located on Lake Chaplain provides sand filtration and chlorine disinfection of drinking water. This water is supplied to the City through three connections to the City of Everett Transmission Main No. 5, located approximately three miles north of the City. The three connections are summarized in Table W 6-1. Note that the pressure from City of Everett Transmission Main No. 5 is not controlled at the Wagner Tap and Chain Lake Tap.

Table W 6-1
Source of Supply Inventory

Name	Capacity (MGD)	Capacity (gpm)	Location
Wagner Tap	3.00	2,080	107 St. SE & 219 Ave. SE Monroe, WA 98272 SW1/4-NE1/4 Section 20, T28N, R07E
Chain Lake Tap	4.15	2,880	18901 100th St. SE Monroe, WA 98272 NW1/4-NE1/4 Section 24, T28N, R06E
North Hill Tap	2.88	2,000	20218 Pipeline Rd. Monroe, WA 98272 NE1/4-NW1/4 Section 19, T28N, R07E

THIS PAGE INTENTIONALLY BLANK.

Chain Lake Road Tap

North Hill Tap and PS

Wagner Road Tap

North Hill Tank Campus

Trombley Tank Campus

Wagner North PRV Station

Airport PRV Station

Foothills PRV Station

199th Ave PRV Station

Lord Hill Pump Station

134th Dr South PRV Station

Fairgrounds PRV Station

Ingraham Hill Tank Campus

127th Ave PRV Station

Spring Hill Pump Station

Chain Lake North PRV Station

County Cresent PRV Station

Lord Hill Tank Campus

Spring Hill Tank Campus

Old Owen Road PRV Station

Calhoun Road PRV Station

Old Sno-Mon Rd PRV Station

Woods Creek PRV Station

177th Pump Station

Chain Lake South PRV Station

Tester Road Pump Station

DOC Tank Campus

Legend

City of Everett Tap	Pipe Diamter
System Pump	3 & 4-inch
System Tank	6-inch
System Valve	8-inch
	10-inch
	12-inch
	14, 16 & 18-inch

Water System: City of Monroe 2024

Snohomish County base data 2024

Data sources supplied may not reflect current or actual conditions. This map is a geographic representation based on information available. It does not represent survey data. No warranty is made concerning the accuracy, currency, or completeness of data depicted on this map.
BHC Consultants LLC., assumes no responsibility for the validity of any information presented herein, nor any responsibility for the use or misuse of the data.

N

0 0.25 0.5 1 Miles

Asset Inventory

Utility Systems Plan - Water
City of Monroe, Washington
September 2024

Figure

W 6-1

COPYRIGHT © 2024 BHC CONSULTANTS LLC., ALL RIGHTS RESERVED

THIS PAGE INTENTIONALLY BLANK

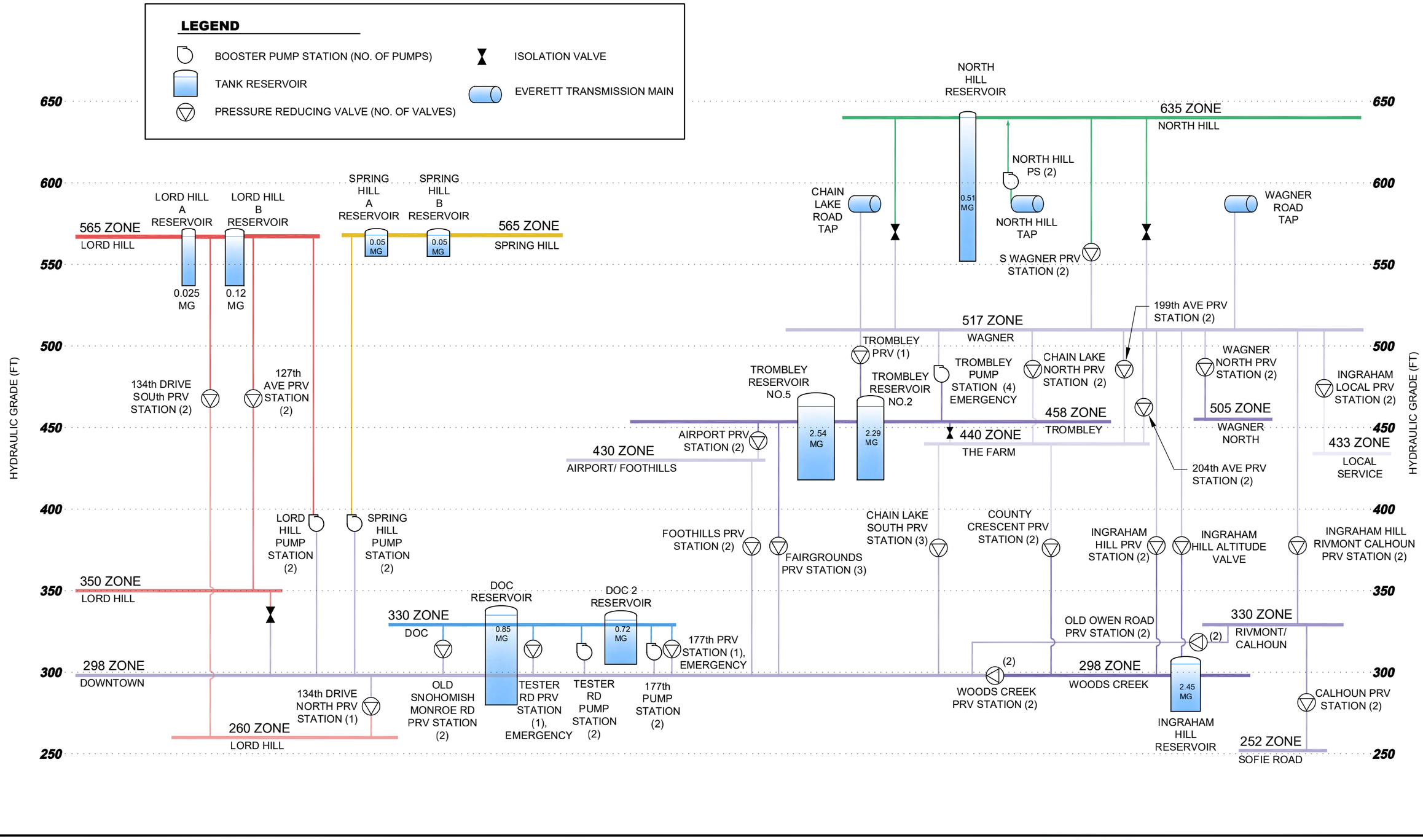

Path: S:\Cad\Monroe\22-10808 Monroe Utility Systems\Report\ Filename: F22-10808_W6-2 Plot date: Sep 04, 2024-11:33:07am CAD User: RNicolas.
Xref Filename: |

bhc CONSULTANTS

COPYRIGHT © 2024 BHC CONSULTANTS, LLC. ALL RIGHTS RESERVED

MONROE WASHINGTON

System Hydraulic Profile

Utility System Plan - Water
September 2024

Figure
W 6-2

THIS PAGE INTENTIONALLY BLANK.

Since 1996, the City has been operating under the City of Everett Ordinance Rate, and the City is a wholesale customer of the City of Everett. The City of Everett has indicated that they anticipate being able to supply the City's municipal water needs until at least the year 2050[1].

The City's Water System storage facilities are summarized in Table W 6-2 including the newly constructed Washington State Department of Corrections (DOC) #2 tank. The City's pump station facilities are summarized in Table W 6-3 note that for the Spring Hill and Lord Hill Pump Stations, the best available data was taken from the 1998 Sky Meadows hydraulic model and additional information is currently unknown. The City's Pressure Reducing Valves (PRV) stations and Pressure Sustaining Valves (PSV) are summarized in Table W 6-4.

Table W 6-2
Storage Facilities Inventory

Name	Base Elevation (ft NAVD 88)	Overflow Elevation (ft NAVD 88)	Diam. (ft)	Material	Year of Constr.	Volume (MG)
DOC	280.0	335.0	50	Steel	1986	0.81
DOC #2	305.0	332.0	73	Steel	2022	0.85
Ingraham Hill	276.0	305.0	120	Steel	2001	2.45
Lord Hill A	536.5	566.5	12	Steel	Unknown	0.03
Lord Hill B	537.0	567.0	26	Concrete	Unknown	0.12
North Hill	547.0	635.0	45	Steel	2004	1.05
Spring Hill A	555.0	568.0	26	Concrete	Unknown	0.05
Spring Hill B	555.0	568.0	26	Concrete	Unknown	0.05
Trombley #2	418.0	463.0	93	Steel	1984	2.29
Trombley #5	417.0	462.0	98	Steel	2006	2.54

[1] City of Everett and HDR Engineering. (2020). *City of Everett Washington 2020 Comprehensive Water Plan.* Everett Washington: City of Everett.

Table W 6-3
Pump Station Inventory

Name	Year Constructed	Pump No.	Manufacturer and Model Number	Capacity (gpm @ TDH)	Motor HP	Suct. Zone	Disch. Zone
Trombley PS	2006	1	Cornell 1.5WH	125 @ 97 feet (ft)	5	Trombley 458	Chain Lake 517
		2	Cornell 2WH	250 @ 118 ft	10		
		3	Cornell 2WH	250 @ 118 ft	10		
		4	Cornell 8H	3,000 @ 130 ft	125		
Tester Rd PS	1999	1	Peerless 10HXB 5-stage	950 @ 130 ft	40	Downtown 298	DOC 330
		2	Peerless 10HXB 5-stage	950 @ 130 ft	40		
177th PS (Backup to Tester Rd. station)	1994	1	Floway 10DKH 5-stage	700 @ 135 ft	50	Downtown 298	DOC 330
		2	Floway 10DKH 5-stage	700 @ 135 ft	50		
North Hill PS	2004	1	Simflo SC12C 2-stage	400 @ 156 ft	20	Chain Link 517	North Hill 635
		2	Simflo SC12C 2-stage	400 @ 156 ft	20		
		3	Simflo SV12C 3-stage	1,500 @ 170 ft	100		
Spring Hill PS	1998	1	Unknown	160 @ 333 ft	25	Downtown 298	Spring Hill 565
		2	Unknown	160 @ 333 ft	25		
Lord Hill PS	1998	1	Unknown	235 @ 349 ft	35	Downtown 298	Lord Hill 565
		2	Unknown	235 @ 349 ft	35		

Table W 6-4
Pressure Reducing Valve Station and Pressure Sustaining Valve Inventory

Station	Model	Elevation (ft NAVD88)	Size (in)	Inlet PZ	Outlet PZ	Outlet PSI	Type
127th Avenue PRV	4-90-601-ABC	285.3	2	LH565	LH350	35	Lead
	2-50-01	283.8	4	LH565	LH350	30	Lag
134th Drive North PRV	2-916-01AS	107.6	2	D298	LH260	60	Lead
134th Drive South PRV	2-306-01	106.4	1	LH565	LH260	70	Lead
	3-90-01AS	106.7	3	LH565	LH260	65	Lag
199th Avenue PRV		275.7	3	W517	F440	55	Lead
		275.5	8	W517	F440	50	Lag
204th Avenue PRV		255.1	3	W517	F440	65	Lead
		254.9	6	W517	F440	60	Lag
Airport PRV	10-100-01	46.0	3	T458	AF430	105	Lead
	3-100-01	46.0	10	T458	AF430	100	Lag
Calhoun Road PRV		217.1	2	RC330	SR252	18	Lead
		217.1	8	RC330	SR252	13	Lag
Chain Lake North PRV	3-100-01	270.6	3	W517	F440	60	Lead
	3-100-01	270.8	8	W517	F440	55	Lag
Chain Lake South PRV	12-90-01AB	141.3	2	F440	D298	40	Lead
	2-90-01A5	140.1	6	F440	D298	35	Lag1
	4-50-01	140.3	12	F440	D298	30	Lag2
County Cresent PRV		181.4	3	F440	WC298	40	Lead
		181.4	10	F440	WC298	35	Lag
DOC PRV		58.4	12	DOC330	D298	45	Lead
Fairgrounds PRV	6-90-01AB	44.3	2	T458	D298	95	Lead
	2-90-01A5	45.7	6	T458	D298	90	Lag1
		46.5	8	T458	D298	85	Lag2
Foothills PRV	90-01AB	48.0	2	AF430	D298	80	Lead
		48.0	8	AF430	D298	75	Lag
Ingraham Calhoun PRV	6-906-01AB	272.5	2	WC298	RC330	48	Lead
	90-01-194A	272.4	8	WC298	RC330	40	Lag
Local PRV	4-90-01BY	272.6	2	WC298	L442	70	Lead
	2-90-01BSY	272.6	4	WC298	L442	60	Lag
Ingraham Woods Creek PRV	8-100-01	272.8	8	WC298	WC298	10	Lead
Owen Road PRV	10-906-01ABC	68.5	4	RC330	D298	70	Lead
	4-906-01ABC	70.0	10	RC330	D298	65	Lag
Snohomish Monroe Road PRV		65.9	2	DOC330	D298	60	Lead
		65.9	6	DOC330	D298	70	Lag
Tester Road PRV		55.7	8	DOC330	D298	45	Lead
Trombley PRV	750-67M	419.8	6	W517	T458	15	Lead
Wanger North PRV		382.0	2	W517	WN505	60	Lead
		382.0	6	W517	WN505	55	Lag
Wagner South PRV		432.1	3	NH635	W517	40	Lead
		435.8	10	NH635	W517	35	Lag
Woods Creek PRV	8-100-01	76.0	3	WC298	D298	72	Lead
	3-100-01	76.0	8	WC298	D298	68	Lag
Reservoir 5 PSV	8-210-03BDHY	420.5	8			99	Lead
Trombley PSV		420.5	6			85	Lead

THIS PAGE INTENTIONALLY BLANK.

The City's distribution system is primarily, approximately 48 percent, 8-inch piping. The system piping length, material, diameter, and year of installation is summarized in Table W 6-5, Table W 6-6, and Table W 6-7. There are three transmission mains that connect City of Everett Transmission Main No. 5 to the City's system, these three are outlined as:

- Wagner Main I: 8,900 feet of 18 inch main (2006) and 5,300 feet of 12 inch main (2012).
- Chain Lake Road: 21,000 feet of 12 and 16 inch main (1978).
- North Hill: 1,700 feet of 12 inch main (2004).

Table W 6-5
Pipe Length by Diameter and Material

Pipe Length	Asbestos Cement	Cast Iron	Ductile Iron	PVC	Steel	Unknown	Sum
4-inch	25,303	-	2,816	6,071	-	1,463	35,653
6-inch	61,749	-	26,329	10,517	-	14,475	113,071
8-inch	20,823	-	197,105	98,479	-	19,343	335,750
10-inch	8,069	456	38,394	11,781	-	2,650	61,350
12-inch	5,087	2,112	89,742	26,284	268	5,358	128,852
16-inch	6,019	-	5,757	2,969	-	-	14,745
18-inch	-	-	-	-	8,889	-	8,889
Sum	127,051	2,568	360,143	156,102	9,157	43,289	698,310

Table W 6-6
Pipe Material by Diameter and Year of Installation

Year of Installation	4-inch	6-inch	8-inch	10-inch	12-inch	16-inch	18-inch
< 1950	AC, DI, UNK	AC, DI, PVC, UNK	AC, DI, PVC, UNK	AC, CI, DI, PVC, UNK	AC, CI, DI, PVC, Steel, UNK	AC, DI	-
1950-1960	AC	AC, DI	AC, DI, PVC	AC	-	-	-
1960-1970	AC, DI	AC, DI	AC	DI	AC, CI, DI	-	-
1970-1980	-	AC	AC	AC, PVC	AC	AC	-
1980-1990	AC, PVC	AC, DI, PVC	AC, DI, PVC	AC, DI, PVC	DI	AC, DI	-
1990-2000	AC, PVC	AC, DI, PVC	AC, DI, PVC	AC, DI, PVC	AC, DI, PVC	PVC	-
2000-2010	-	DI, PVC, UNK	DI, PVC	-	DI, PVC, UNK	-	Steel
2010-2024	DI	AC, DI	DI, PVC, UNK	DI	DI, UNK	PVC	-

Table W 6-7
Length of Pipe by Material and Installation Year

Year of Installation	Asbestos Cement	Cast Iron	Ductile Iron	PVC	Steel	Unknown	Sum
< 1950	75,741	789	169,354	32,502	268	42,537	321,190
1950-1960	13,428	-	5,988	493	-	-	19,910
1960-1970	10,679	1,780	15,152	-	-	-	27,610
1970-1980	10,641	-	-	150	-	-	10,791
1980-1990	8,287	-	46,236	28,551	-	-	83,073
1990-2000	6,838	-	58,123	87,331	-	-	152,292
2000-2010	-	-	41,013	4,855	8,889	348	55,104
2010-2024	1,437	-	24,276	2,221	-	405	28,339
Sum	127,051	2,568	360,143	156,102	9,157	43,289	698,310

Since 1936[2] the City Water System has metered all service connections. As of 2023, there are 7,960 water meters in the City Water System, which are all read monthly. The City uses automated meter infrastructure for remote collection of all customer meter reads. Chapter W 5 – Basic Planning Data summarizes the customer meters, rate codes, and fees inside of the city limits and outside of the city limits in Table W 5-3.

W 6.2 Water Quality Analysis

This section summarizes an evaluation of the City's efforts to comply with the required water quality regulations and testing requirements. Specific details on water quality sampling and results are included in Chapter W 9 – Operations and Maintenance Program. Additionally, a detailed review of the water quality of the City of Everett public drinking water system is provided in the current City of Everett Comprehensive Water Plan[3].

W 6.3 System Design Standards

Standard construction plans set forth the materials and construction standards that contractors, developers, and the City must follow when constructing water system facility improvements. Standard construction plans for the City are included in Appendix CE-A. Additional information regarding the City's approach and standards is included in Chapter W 10 – Distribution Facilities Design and Construction Standards.

A variety of laws, rules, regulations and standards apply to the management, evaluation, and design of the City's water system. Among these are the following:

- Washington State Department of Health Water System Design Manual[4]
- Chapter 246-290 WAC

[2] Robertson, Nellie E., Monroe: The Next Thirty Years (1911-1940), Nellie E. Robertson, August 2002.
[3] City of Everett and HDR Engineering. (2020). *City of Everett Washington 2020 Comprehensive Water Plan.* Everett Washington: City of Everett.

[4] Washington State Department of Health. (2020). *Water System Design Manual.* Washington State Department of Health.

- North Snohomish County Coordinated Water System Plan[5]
- International Fire Code[6]
- Monroe Municipal Code Chapter 13.04
- Monroe Public Works Design and Construction Standards
- Department of Health Water Quality Standard Regulations

System design standards applicable to the City water system facilities are summarized in Table W 6-8.

The City has established required fire flows for each of the zoning classifications within the Retail Water Service Area. These fire flow requirements are based on the International Fire Code Appendix B Fire Flow Requirements for Buildings. There are also eight individual locations that require fire flows higher than the zoning classifications that are considered separately for analysis. Figure W 6-3 shows these fire flow requirements.

[5] Snohomish County Water Utility Coordinating Committee. 2010. *North Snohomish County Coordinated Water System Plan.* Coordinated Water System Plan, Everett: Snohomish County.

[6] International Code Council, INC. (2021). 2018 International Fire Code. International Code Council, Inc.

THIS PAGE INTENTIONALLY BLANK.

Table W 6-8
General Facility Design Standards

Standard	DOH Water System Design Manual Criteria (WSDM)[7]	City of Monroe Standard
Average Day Demand and Maximum Day Demand	▪ Average Day Demand (ADD) should be determined from metered water use data. Maximum Day Demand (MDD) is estimated at approximately 2.0 times the average day demand if metered data is not available. ▪ WSDM Chapter 3: Estimating Water Demand.	▪ ADD = metered purchased water (154.7 gpd/ERU). ▪ MDD = metered maximum day purchased water (279.8 gpd/ERU; peaking factor is 1.81 for the City based on available data).
Peak Hour Demand	▪ Peak hour demand is determined using the following equation: $PHD = \frac{ERU_{MDD}}{1440} * [C * N + F] + 18$ ▪ Where: PHD = Peak Hour Demand (gallons per minute) ERU_{MDD}= Maximum Day Demand per ERU (gallons per day) C = Coefficient Associated with Ranges of ERUs (C=1.6 per WSDM Table 3-1) N = Number of connections, ERUs F = Factor Associated with Ranges of ERUs (F=225 per WSDM Table 3-1). ▪ WSDM Chapter 3: Estimating Water Demand.	PHD = peak hour demand (453.3 gpd/ERU; peaking factor is 1.62 based on this calculation).
Reliability Recommendations	▪ Two or more sources are available. ▪ Permanent and seasonal sources are capable of replenishing depleted fire suppression storage within 72-hours (continuous, 24-hour source pumping may be assumed for replenishment), or sooner if the local fire authority requires it, while concurrently supplying the MDD for the water system. ▪ Permanent and seasonal source capacity is enough to supply MDD in a pumping period of 20 hours or less. ▪ With the largest source out of service, the remaining permanent and seasonal sources can provide a minimum of ADD for the water system. ▪ Source of supply pump stations have power connections to two independent primary public power sources, have in-place auxiliary power available (auto transfer capable), and/or maintain adequate gravity standby storage. ▪ WSDM Chapter 3: Estimating Water Demand.	Same as DOH Water System Design Manual.
Minimum System Pressure	▪ The system should be designed to maintain a minimum of 30 psi in the distribution system under PHD and 20 psi under MDD plus fire flow conditions. ▪ WSDM Chapter 3: Estimating Water Demand	Same as DOH Water System Design Manual.
Fire Flow Standard	▪ The local fire protection authority or county fire marshal usually determines minimum fire flow requirements WAC 246-290-221. ▪ WSDM Chapter 3: Estimating Water Demand.	The City's fire flow requirements are based on the International Fire Code (IFC) Guidelines.
Minimum Pipe Sizes	▪ The diameter of a transmission line shall be determined by hydraulic analysis. All new and replaced distribution mains must be at least 6 inches in diameter, unless a hydraulic analysis justifies another size (WAC 246-290-230). ▪ WSDM Chapter 6: Transmission and Distribution Main Design.	The City and the Coordinated WSP of Snohomish County have set a standard that all new and replaced distribution mains must be at least 8 inches in diameter.
Valve and Hydrant Spacing	▪ Sufficient valving should be placed to keep a minimum of customers out of service when water is turned off for maintenance or repair. ▪ Fire hydrants should be provided with their own auxiliary gate valve. ▪ WSDM Chapter 6: Transmission and Distribution Main Design	Same as DOH Water System Design Manual.
Storage	▪ The sum of: o Operational Storage (OS) Volume sufficient to prevent pump cycling o Equalizing Storage (ES) = $(\mathrm{PHD} - \mathrm{Q_S})(150\ \mathrm{min})$ o Standby Storage (SB) = $\mathrm{N} * \mathrm{SB_i} * \mathrm{T_d}$ o Fire Suppression Storage (FSS) = $\mathrm{FF} * \mathrm{t_m}$ o Dead Storage(DS) Portion of a gravity reservoir that does not provide the required minimum pressure. ▪ Where: PHD = Peak Hour Demand (gpm) $\mathrm{Q_S}$ = Total of all permanent and seasonal sources of supply (gpm) N = number of ERU's $\mathrm{SB_i}$ = Standby Storage volume in gallons per day per ERU, a value of 200 was used per DOH recommendation $\mathrm{T_d}$ = Number of days selected to meet water system-determined standard of reliability FF = Required fire flow rate, expressed in gpm as specified by the fire flow standard. $\mathrm{t_m}$= Duration of fire flow expressed in minutes as specified by the fire flow standard. ▪ WSDM Chapter 7: Reservoir Design and Storage Volume	Same as DOH Water System Design Manual.

[7] Washington State Department of Health. (2020). *Water System Design Manual.* Washington State Department of Health.

THIS PAGE INTENTIONALLY BLANK.

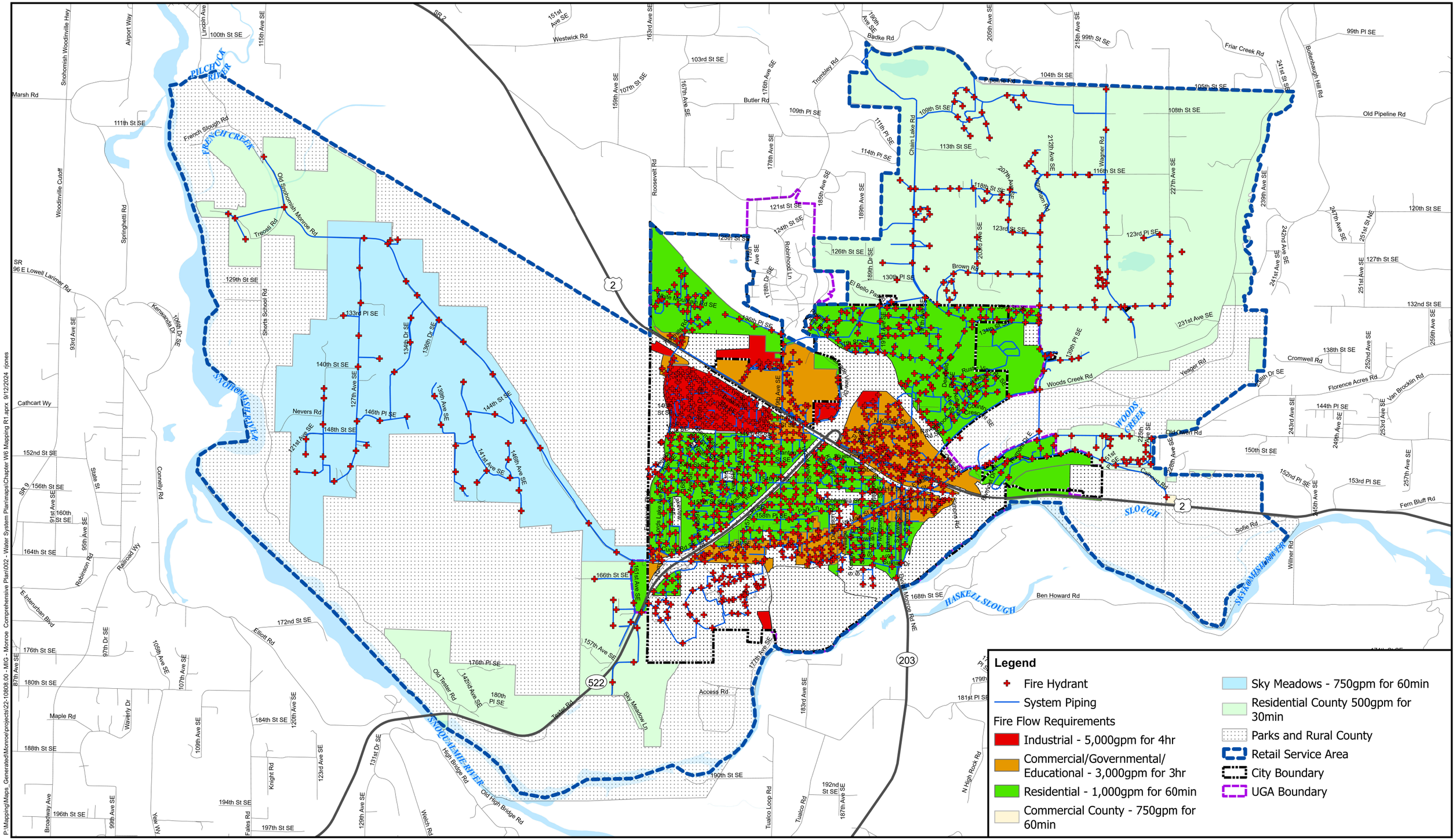

Water System: City of Monroe 2024

Snohomish County base data 2024

Data sources supplied may not reflect current or actual conditions. This map is a geographic representation based on information available. It does not represent survey data. No warranty is made concerning the accuracy, currency, or completeness of data depicted on this map.
BHC Consultants LLC., assumes no responsibility for the validity of any information presented herein, nor any responsibility for the use or misuse of the data.

N

0 0.5 1 2 Miles

Fire Flow Requirements

Utility Systems Plan - Water
City of Monroe, Washington
September 2024

Figure
W 6-3

COPYRIGHT © 2024 BHC CONSULTANTS LLC., ALL RIGHTS RESERVED

P:\Mapping\Maps_Generated\Monroe\projects\22-10808.00 - MIG - Monroe Comprehensive Plan\002 - Water System Plan\maps\Chapter W6 Mapping R1.aprx 9/12/2024 rjones

THIS PAGE INTENTIONALLY BLANK.

W 6.4 Capacity Analysis

This section outlines the City's source of supply and source reliability, tank and pump analysis, and hydraulic modeling efforts and results.

W 6.4.1 Source of Supply Analysis

The City purchases finished water from the City of Everett. The water is delivered to the City from the Everett Transmission Main No. 5, a 51-inch steel pipe with a capacity of 50 million gallons per day per the City of Everett Comprehensive Water Plan[8]; the City currently has three taps on the Transmission Main No. 5. The location and capacity of these taps are outlined in Table W 6-1. This is considered as the City having two or more sources.

The reliability recommendation to have sufficient capacity to replenish depleted fire flow within 72 hours while supplying the system MDD is met. The maximum fire suppression storage (FSS) in the City is for a 5,000 gpm fire for four hours. This results in a fire suppression storage of 1,200,000 gallons; over 72 hours this becomes 0.40 MGD. Based on the flow projections in Chapter W 5 – Basic Planning Data, the expected MDD in 2050 is 4.82 MGD. The 2050 MDD plus the fire suppression storage recovery sums to 5.22MGD. The sum of supply to the City is 10.03 MGD per Table W 6-1. This leaves an additional supply capacity of 4.81 MGD meeting this recommendation.

The reliability recommendation to have sufficient capacity to supply MDD in a pumping period of 20 hours of less is also met. The Wagner and Chain Lake taps are not pumped, but are included in this consideration. The projected 2050 MDD is 4.82 MGD. The sum of the sources of supply in a 20 hour period is 8.35 MGD. This leaves an additional capacity of 3.53 MGD, meeting this recommendation.

With the largest source out of service, the remaining supply capacity to the City is 5.88 MGD. The projected 2050 ADD is 2.67 MGD. This leaves an additional capacity of 3.21 MGD, meeting this recommendation.

The Wagner and Chain Lake Taps do not have power and pull water out of the City of Everett Transmission Main No. 5 without pressure controls and do not require power and are exempt from requiring back up power. The North Hill Tap campus has a booster pump station that includes a power backup in the form of a 50kW generator, thus meeting the recommendation.

W 6.4.2 Tank Storage and Pump Station Analysis

The City's system includes 16 pressure zones; ten of these pressure zones are fed by PRV stations, booster stations, or the direct connection to the City of Everett. For this analysis, the city is considered in five service areas. These service areas, the pressure zones that they serve and the tanks that are included in the service area are outlined in Table W 6-9. The City currently has 9.6 million gallons of storage located in ten storage facilities. Several of these tanks (DOC & DOC #2, Trombley 2 & 5, Spring Hill A & B, and Lord Hill A & B) are located at the same site and serve the same pressure zones. The Trombley 2 & 5 tanks and the Ingraham Hill tank serve many of the same pressure zones through PRV stations with operational flexibility and system interconnectivity. Because of this, these tanks are considered together as the Trombley and Ingraham Hill service area.

[8] City of Everett and HDR Engineering. (2020). *City of Everett Washington 2020 Comprehensive Water Plan.* Everett Washington: City of Everett.

Table W 6-9
Service Area Descriptions

Service Area	Pressure Zones Included	Tank Name	Largest Source, Removed for Fire Flow
DOC	DOC 330	DOC, DOC 2	Tester Road PS, Lag Pump
Lord Hill	Lord Hill 260, Lord Hill 350, Lord Hill 565	Lord Hill A & B	Lord Hill PS, Lag Pump
North Hill	North Hill 635	North Hill	North Hill PS, Lag Pump
Spring Hill	Spring Hill 565	Spring Hill A & B	Spring Hill PS, Lag Pump
Trombley & Ingraham Hill	Airport Foothills 430, Downtown 298, Farm 440, Local 442, Rivmont Calhoun 330, Sofie Road 252, Trombley 458, Wagner 517, Woods Creek 298, WN505	Trombley No. 2 & 5, Ingraham Hill	Chain Lake Road Tap

The storage analysis to determine and document the operational, equalizing, fire suppression storage, standby storage, and dead storage is documented in Table W 6-10. The fire suppression storage considered is the largest fire flow for the service area, consistent with Figure W 6-3. The City nests standby and fire suppression storage, this analysis includes volume calculations for each of these, identifies the larger of the two and summarizes the nested storage considered for each service area. The storage components within the City's tanks are summarized in Figure W 6-4. The results of this analysis indicate that the City's tanks have sufficient storage for the considered planning horizons.

The City system includes six booster pump stations servicing five different pressure zones throughout the retail service area. Note that the Tester Road and 177th pump stations both serve the DOC 330 pressure zone and are considered together in the assessment of the DOC 330 pressure zone. Additionally, the Trombley Pump Station is a backup/emergency station that is intended to only operate if the primary source of supply to the Wagner 517 Zone is unavailable. As it is intended to operate under these conditions, it is evaluated assuming that the City of Everett Pipeline No. 5 is out of service, which would be the largest source to the pressure zone, as such all of the pumps at this pump stations are assumed to be in operation. The pump station capacities are summarized and evaluated in Table W 6-11. The results of this analysis indicate that the City's pump stations have sufficient capacity for the considered planning horizons.

Table W 6-10
Tank Storage Analysis

Service Area	Lord Hill			Spring Hill			North Hill			Department of Corrections			Trombley and Ingraham Hill		
Planning Horizon	2024	2034	2044	2024	2034	2044	2024	2034	2044	2024	2034	2044	2024	2034	2044
ERUs	187	187	187	90	90	90	375	375	375	2,682	2,828	2,982	10,541	11,708	12,843
ADD (MGD)	0.03	0.03	0.03	0.014	0.014	0.014	0.06	0.06	0.06	0.41	0.44	0.46	1.63	1.81	1.99
MDD (MGD)	0.05	0.05	0.05	0.025	0.025	0.025	0.10	0.10	0.10	0.75	0.79	0.83	2.95	3.28	3.59
PHD (MGD)	0.08	0.08	0.08	0.041	0.041	0.041	0.17	0.17	0.17	1.22	1.28	1.35	4.78	5.31	5.83
Functional Storage[1] (MG)	0.14			0.103			0.51			1.56			7.28		
Operational Storage[2] (MG)	0.01			0.008			0.03			0.15			0.20		
Equalizing Storage[3] (MG)	0.01	0.01	0.01	0.004	0.004	0.004	0.02	0.02	0.02	0.13	0.13	0.14	0.50	0.55	0.61
Fire Suppression Storage[4] (MG)	0.09			0.090			0.06			1.20			1.20		
Standby Storage[5] (MG)	0.07	0.07	0.07	0.036	0.036	0.036	0.15	0.15	0.15	1.07	1.13	1.19	4.22	4.68	5.14
Nested FSS or SB	FSS			FSS			SB			FSS			SB		
Nested FSS and SB (MG)	0.09			0.090			0.15	0.15	0.15	1.20			4.22	4.68	5.14
Surplus / Deficit (MG)	0.04	0.04	0.04	0.001	0.001	0.001	0.32	0.32	0.32	0.09	0.08	0.07	2.36	1.84	1.34

Notes:

1) Functional Storage is the storage available between the level of dead storage and the elevation of the lowest overflow of the tanks in the considered service area.
2) Operational Storage is the volume required for pump protection.
3) Equalizing Storage is defined as ES = (PHD – Qs)*150 min; Qs is aligned with the District's 2017 WSP as 0 MG for the 520 Service Area, 66.8 MG for the 635 Service Area, and 5.6 MG for the 724 Service Area.
4) Fire Suppression Storage is assumed as 5,000 gpm for four hours in the DOC 330 and Trombley Ingraham Hill Service Areas; 1,500 gpm for one hour in the Lord Hill and Spring Hill Service Areas; and 1,000 gpm for one hour in the North Hill Service Area.
5) Standby Storage is defined as $SB=N*SB_i*T_d$ where N is the number of ERUs, SB_i is the standby storage per ERU which is assumed to be 200 gpm per DOH recommendation, and T_d is the number of days selected to meet the system-determined standard of reliability which was assumed as one day in accordance with the 2017 WSP.

Table W 6-11
Pump Station Analysis

Service Area	Lord Hill			Spring Hill			North Hill			Department of Corrections			Trombley and Ingraham Hill		
Pressure Zone Served by PS	Lord Hill 565, Lord Hill 350, Lord Hill 260			Spring Hill 565			North Hill 635			DOC 330			Wagner 517		
Planning Horizon	2024	2034	2044	2024	2034	2044	2024	2034	2044	2024	2034	2044	2024	2034	2044
ERUs	187	187	187	90	90	90	375	375	375	2,682	2,828	2,982	10,541	11,708	12,843
ADD (MGD)	0.03	0.03	0.03	0.01	0.01	0.01	0.06	0.06	0.06	0.41	0.44	0.46	1.63	1.81	1.99
MDD (MGD)	0.05	0.05	0.05	0.03	0.03	0.03	0.10	0.10	0.10	0.75	0.79	0.83	2.95	3.28	3.59
MDD (gpm)	36	36	36	17	17	17	73	73	73	521	550	579	2,048	2,275	2,496
Fire Suppression Storage[1] (FSS)(MG)	0.09			0.09			0.06			1.2			1.2		
Replenish FSS in 72 hours (gpm)	21			21			14			278			278		
Total Required Capacity (gpm)	57	57	57	38	38	38	87	87	87	799	827	857	2,326	2,553	2,773
Pump Station Capacity with the Largest Pump out of Service (gpm)	235			160			800			2,350			3,625		
Surplus / Deficit (gpm)	178	178	178	122	122	122	713	713	713	1,551	1,523	1,493	1,299	1,072	852

Note:
1) Fire Suppression Storage is assumed as 5,000 gpm for four hours in the DOC 330 and Trombley Ingraham Hill Service Areas; 1,500 gpm for one hour in the Lord Hill and Spring Hill Service Areas; and 1,000 gpm for one hour in the North Hill Service Area.

Lord Hill Service Area Storage

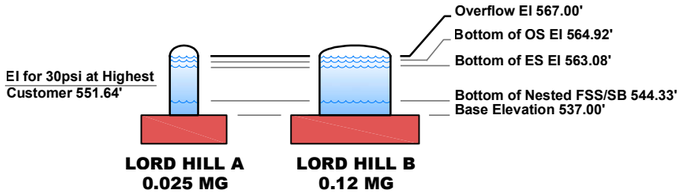

Spring Hill 565 Pressure Zone Storage

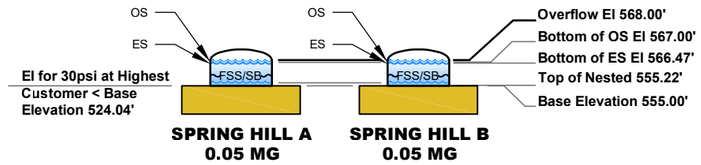

North Hill 635 Pressure Zone Storage

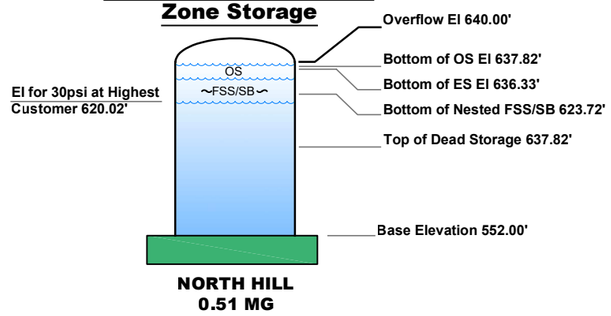

Trombley 458 Pressure Zone Storage

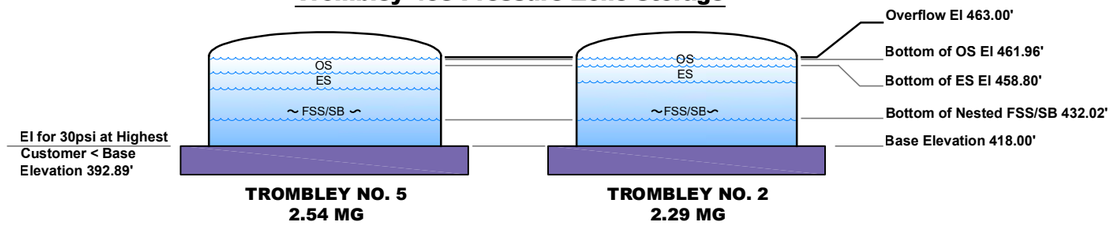

DOC 330 Pressure Zone Storage

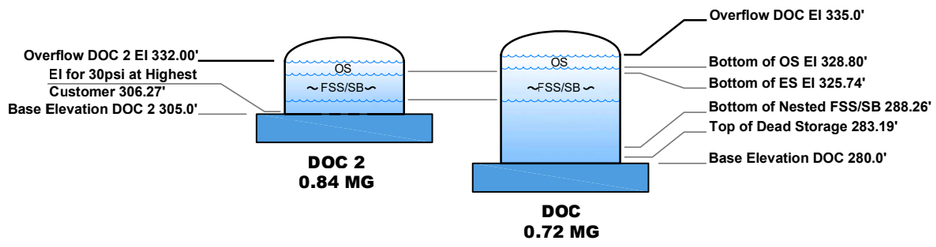

Downtown 298 Pressure Zone Storage

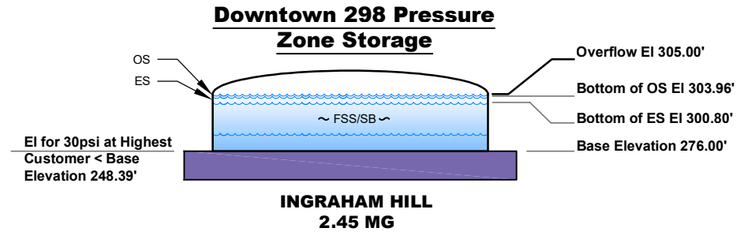

Path: S:\Cad\Monroe\22-10808 Monroe Utility Systems\Report\ Filename: F22-10808_W6-4 Plot date: Sep 05, 2024-08:47:47am CAD User: RNicolas.
Xref Filename: |

bhc CONSULTANTS

MONROE WASHINGTON

System Hydraulic Profile

Utility System Plans - Water
September 2024

Figure

W 6-4

COPYRIGHT © 2024 BHC CONSULTANTS, LLC. ALL RIGHTS RESERVED

THIS PAGE INTENTIONALLY BLANK.

W 6.4.3 Distribution System Hydraulic Analysis

The water system computer model was updated to use Autodesk (previously Innovyze) InfoWater Pro inside of ArcGIS Pro to use the EPA NET 2.2 engine. The model updates and calibration efforts are included in a Technical Memo in Appendix W-F. The City has identified priority replacement piping based on operator input, pipe age, and pipe material; these pipes are identified in Figure W 6-5 and summarized in Table W 6-12.

Table W 6-12
Priority Replacement Piping Summary

Pipe Diameter	AC (ft)	DI (ft)
4-inch	14,520	-
6-inch	47,630	-
8-inch	11,960	800
10-inch	7,980	-
12-inch	790	730
16-inch	6,020	-

This priority replacement piping is used to support the capacity analysis to determine the City's CIP project prioritization. The 2024, 2034, and 2044 planning horizons are considered under ADD with tanks full, PHD with operational and equalizing storage depleted, and MDD with fire flow demand, operational and equalizing storage depleted, and fire suppression storage depleted from the service area to the level required by the fire flow requirements identified in Figure W 6-3. Table W 6-13 identifies the figure that shows the results for the combinations of planning horizon and demand condition.

Table W 6-13
Demand Condition, Planning Horizons and Results Figures

Demand Condition	2024	2034	2044
ADD	Figure W 6-6	Figure W 6-7	Figure W 6-8
PHD	Figure W 6-9	Figure W 6-10	Figure W 6-11
MDD with Fire Flow	Figure W 6-12	Figure W 6-13	Figure W 6-14

W 6.5 Summary of System Deficiencies

The Analysis showed that the City deficiencies are limited to priority replacement piping and fire flow availability. Table W 6-14 summarizes the capacity analysis against the design criteria in the System Design Standards, Section 6.3.

Under the peak hour demand (PHD) conditions with operational and equalizing storage depleted, no deficiencies were identified in the retail service area, some facilities experience lower pressures as is expected at tank campuses and other such system facilities. In this demand condition under the 2044 planning horizon, the system experiences some pressures in excess of 120 psi with many portions of the system exceeding 80 psi.

Under the maximum daily demand (MDD) with fire flow conditions, the results are consistent with more deficiencies shown with higher fire flow demand criteria. Due to the high pressures under non-fire flow conditions, zone boundary changes or alterations to zone settings are not the controlling condition. This analysis shows the capacity and obsolescence are the limiting factors for the City. Table W 6-15 highlights the system fire flow deficiencies and the approach to resolve these deficiencies. Chapter W 11 – Capital Improvement Program explores the solutions to these problems in more detail.

Table W 6-14
Capacity Results Summary

Standard	Summary of Assessment
Reliability Recommendations	The City meets or exceeds the criteria established.
Minimum System Pressure	The system is able to maintain a minimum of 30 psi in the distribution system under PHD with operational and equalizing storage depleted from the system tanks. There are fire flow deficiencies which are discussed in more detail below.
Minimum Pipe Sizes	The City currently maintains piping that is smaller than the minimum pipe size. This piping is identified under the known obsolescent piping discussion and is a priority for replacement for the City.
Storage Analysis	The City has sufficient storage capacity through 2044 in each of its service areas.

Table W 6-15
Fire Flow Deficiency Summary By Service Area

Service Area	Fire Flow Deficiencies	Solution Approach
DOC	Monroe High School has one hydrant that does not independently provide sufficient fire flow. This deficiency is eliminated through the use of multiple hydrants which provides sufficient fire flow at this location.	Required flow available with multiple hydrants as nearby hydrants can supply sufficient fire flow.
	The Department of Corrections Campus has some hydrants that when operated independently do not provide sufficient fire flow. This deficiency is eliminated through the use of multiple hydrants which provides sufficient fire flow (5000 GPM for 4 hours) at this location.	
Lord Hill	Insufficient flow in southern, and highest, portion of the service area.	Upsize obsolescent piping, complete looping around 127th Avenue SE near Lord Hill Reservoirs.
North Hill	One location on the end of a 4-inch dead end.	Upsize piping.
Spring Hill	No documented Deficiencies.	No required solutions.
Trombley and Ingraham Hill	Deficiencies east of State Route (SR) 522 and south of US-2 largely coincide with the obsolescent piping.	Projects in the portion of the Downtown 298 pressure zone focus on replacing and upsizing aging 4-inch and 6-inch AC mains.
	The industrial zoning in the Downtown 298 zone between 149th Street SE and US-2 west of 179th Avenue is prone to deficiencies. There are a number of locations in this area that can supply sufficient fire flow. These are located along the sections of 12-inch and 10-inch piping. In these areas.	Multiple hydrants can be used to split the flow requirement and reduce local velocities. This area would benefit from upsizing the 8-inch piping along 147th St SE between 146th Avenue SE and 179th Avenue SE with 12-inch pipe.
	Deficiencies in the Airport 430 zone are limited by the available flow through the 8-inch and 10-inch mains supplying the zone via the Airport PRV Station. This zone is served through the Airport PRV station and provides flow to the Downtown 298 zone through the Foothills PRV station. The hydraulics of this zone lead to single directional flow putting more onus on the piping on the eastern side of the system with the Airport PRV Station.	There is uncertainty around the future operations of this airport which may lead to redevelopment of this area and changes in fire flow demands. This deficiency should be monitored as part of the City's annual capital project planning process.

THIS PAGE INTENTIONALLY BLANK.

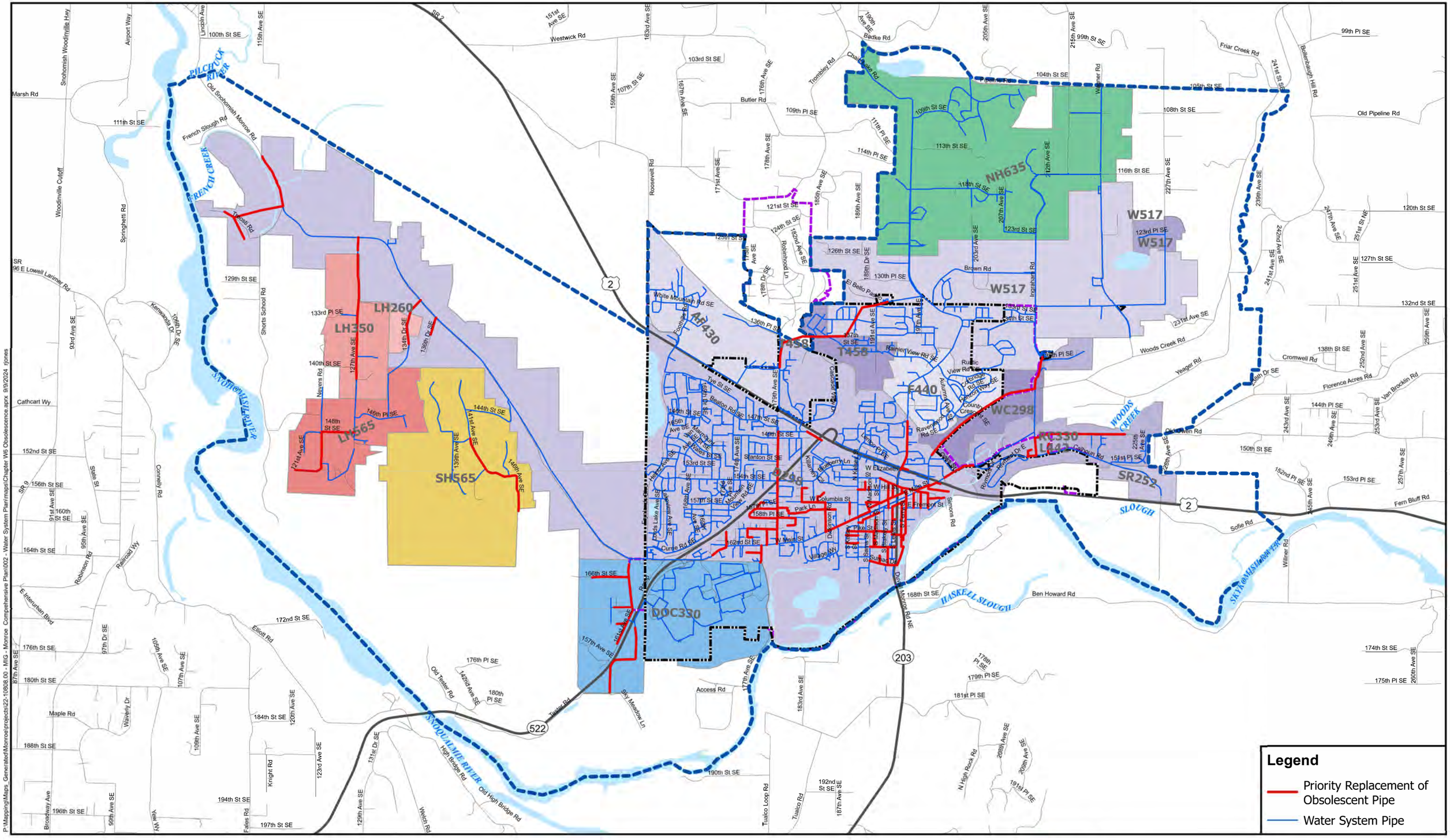

P:\Mapping\Maps_Generated\Monroe\projects\22-10808.00 - MIG - Monroe Comprehensive Plan\002 - Water System Plan\maps\Chapter W6 Obsolescence.aprx 9/9/2024 rjones

bhc CONSULTANTS

Water System: City of Monroe 2024

Snohomish County base data 2024

Data sources supplied may not reflect current or actual conditions. This map is a geographic representation based on information available. It does not represent survey data. No warranty is made concerning the accuracy, currency, or completeness of data depicted on this map.
BHC Consultants LLC., assumes no responsibility for the validity of any information presented herein, nor any responsibility for the use or misuse of the data.

N

0 0.25 0.5 1 Miles

MONROE WASHINGTON

Priority Replacement of Obsolescent Pipe

Utility Systems Plan - Water
City of Monroe, Washington
September 2024

Figure

W 6-5

COPYRIGHT © 2024 BHC CONSULTANTS LLC., ALL RIGHTS RESERVED

THIS PAGE INTENTIONALLY BLANK.

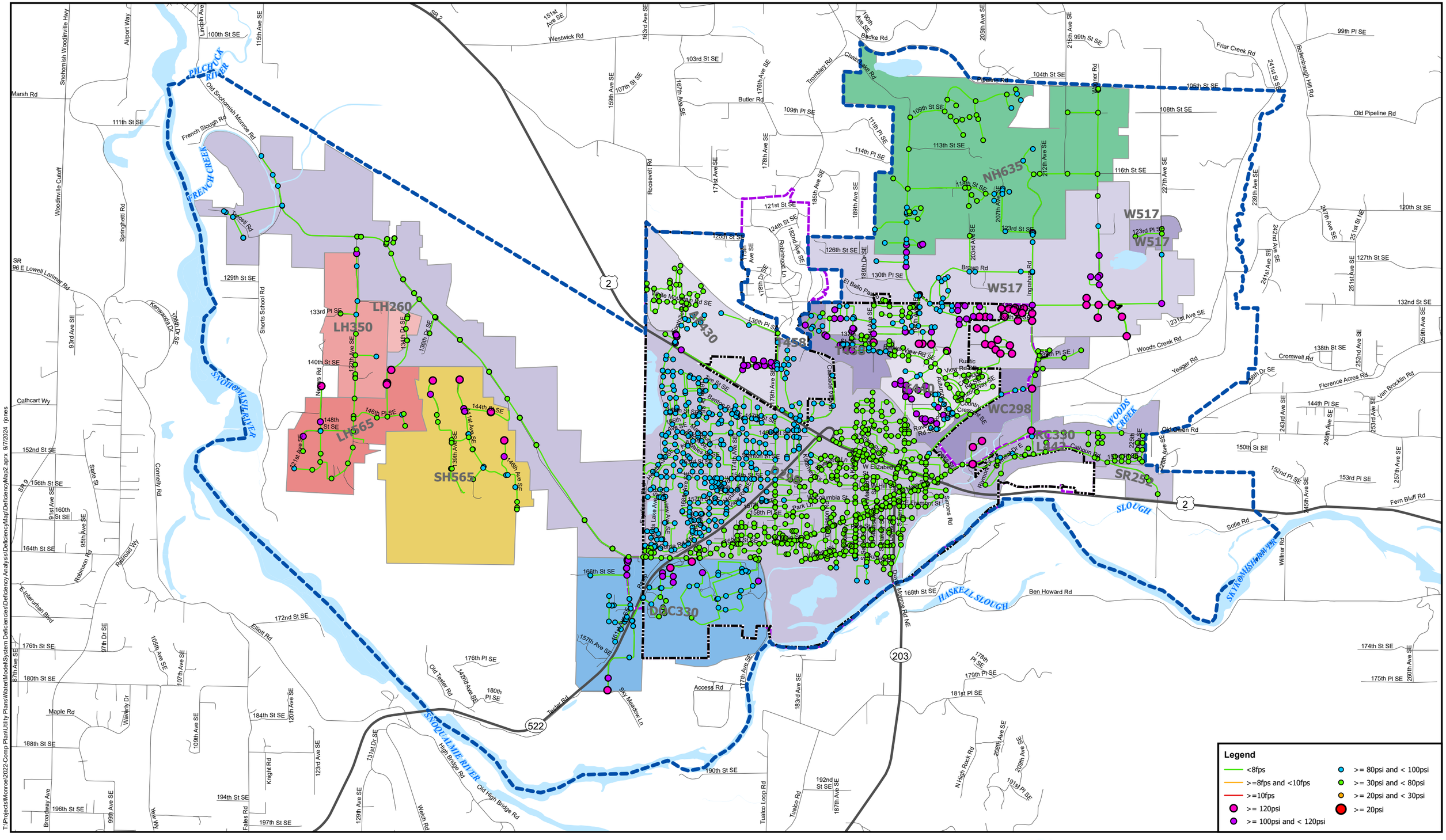

Water System: City of Monroe 2024

Snohomish County base data 2024

Data sources supplied may not reflect current or actual conditions. This map is a geographic representation based on information available. It does not represent survey data. No warranty is made concerning the accuracy, currency, or completeness of data depicted on this map.
BHC Consultants LLC., assumes no responsibility for the validity of any information presented herein, nor any responsibility for the use or misuse of the data.

N

0 0.25 0.5 1 Miles

2024 ADD Scenario

Utility Systems Plan - Water
City of Monroe, Washington
September 2024

Figure

W 6-6

COPYRIGHT © 2024 BHC CONSULTANTS LLC., ALL RIGHTS RESERVED

T:\Projects\Monroe\2022-Comp Plan\Utility Plans\WaterModel\System Deficiencies\Deficiency Analysis\DeficiencyMap\DeficiencyMap2.aprx 9/7/2024 rpnes

THIS PAGE INTENTIONALLY BLANK.

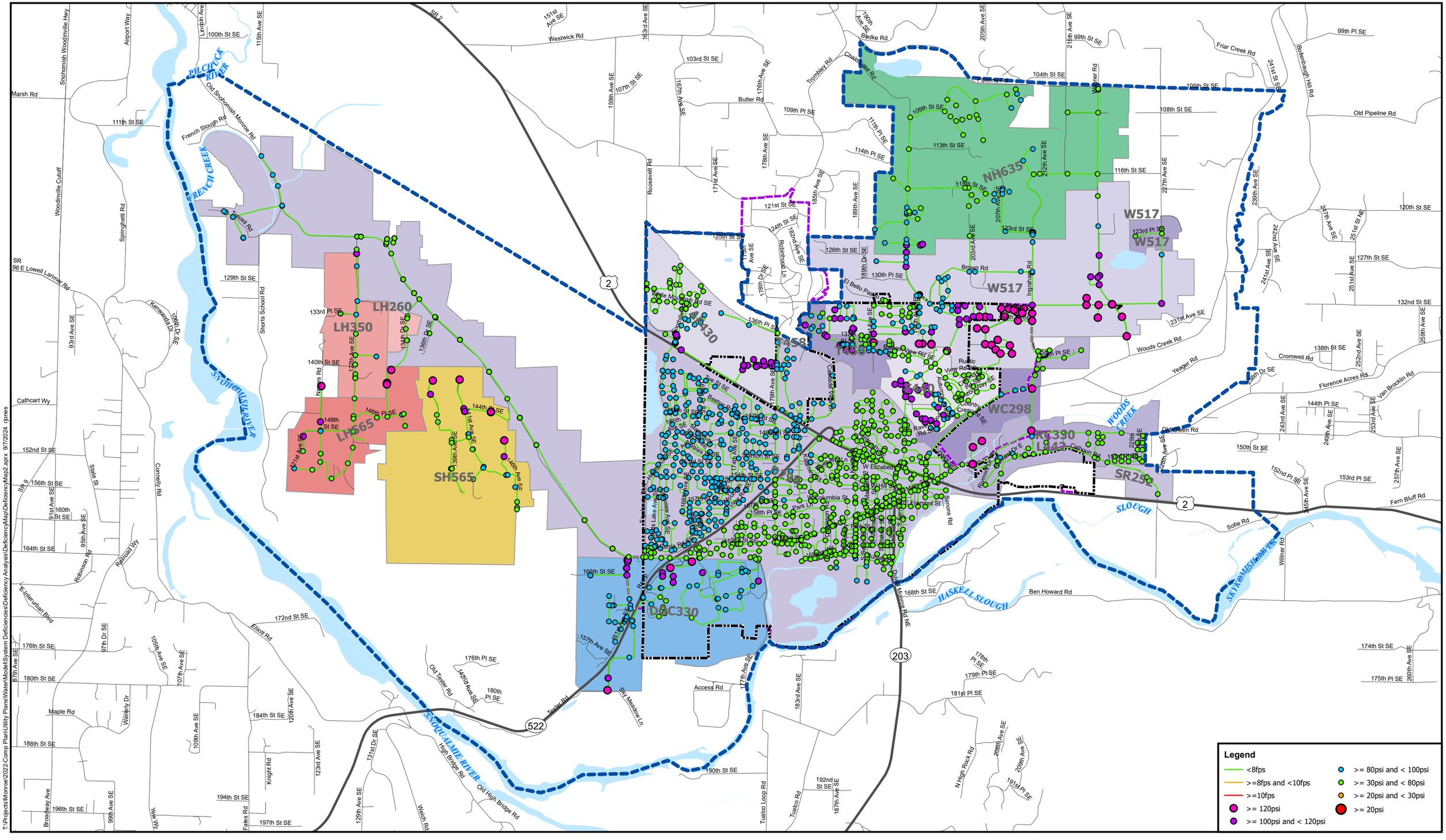

Water System: City of Monroe 2024

Snohomish County base data 2024

Data sources supplied may not reflect current or actual conditions. This map is a geographic representation based on information available. It does not represent survey data. No warranty is made concerning the accuracy, currency, or completeness of data depicted on this map.
BHC Consultants LLC., assumes no responsibility for the validity of any information presented herein, nor any responsibility for the use or misuse of the data.

N

0 0.25 0.5 1 Miles

2034 ADD Scenario

Utility Systems Plan - Water
City of Monroe, Washington
September 2024

Figure

W 6-7

COPYRIGHT © 2024 BHC CONSULTANTS LLC., ALL RIGHTS RESERVED

T:\Projects\Monroe\2022-Comp Plan\Utility Plans\WaterModel\System Deficiencies\Deficiency Analysis\DeficiencyMap\DeficiencyMap2.aprx 9/7/2024 rpnes

THIS PAGE INTENTIONALLY BLANK.

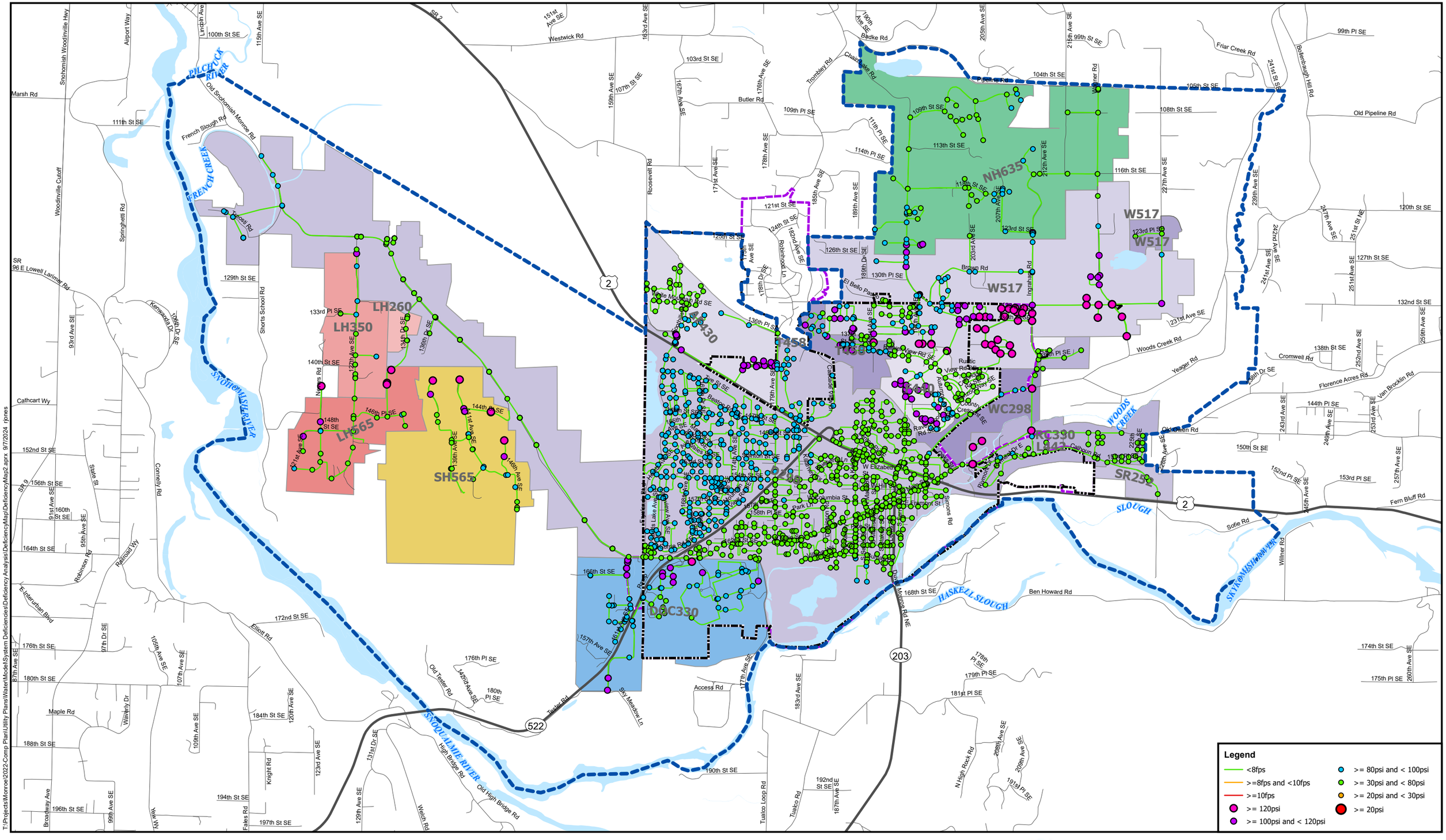

Water System: City of Monroe 2024

Snohomish County base data 2024

Data sources supplied may not reflect current or actual conditions. This map is a geographic representation based on information available. It does not represent survey data. No warranty is made concerning the accuracy, currency, or completeness of data depicted on this map.
BHC Consultants LLC., assumes no responsibility for the validity of any information presented herein, nor any responsibility for the use or misuse of the data.

N

0 0.25 0.5 1 Miles

2044 ADD Scenario

Utility Systems Plan - Water
City of Monroe, Washington
September 2024

Figure

W 6-8

COPYRIGHT © 2024 BHC CONSULTANTS LLC., ALL RIGHTS RESERVED

T:\Projects\Monroe\2022-Comp Plan\Utility Plans\WaterModel\System Deficiencies\Deficiency Analysis\DeficiencyMap\DeficiencyMap2.aprx 9/7/2024 rpnes

THIS PAGE INTENTIONALLY BLANK.

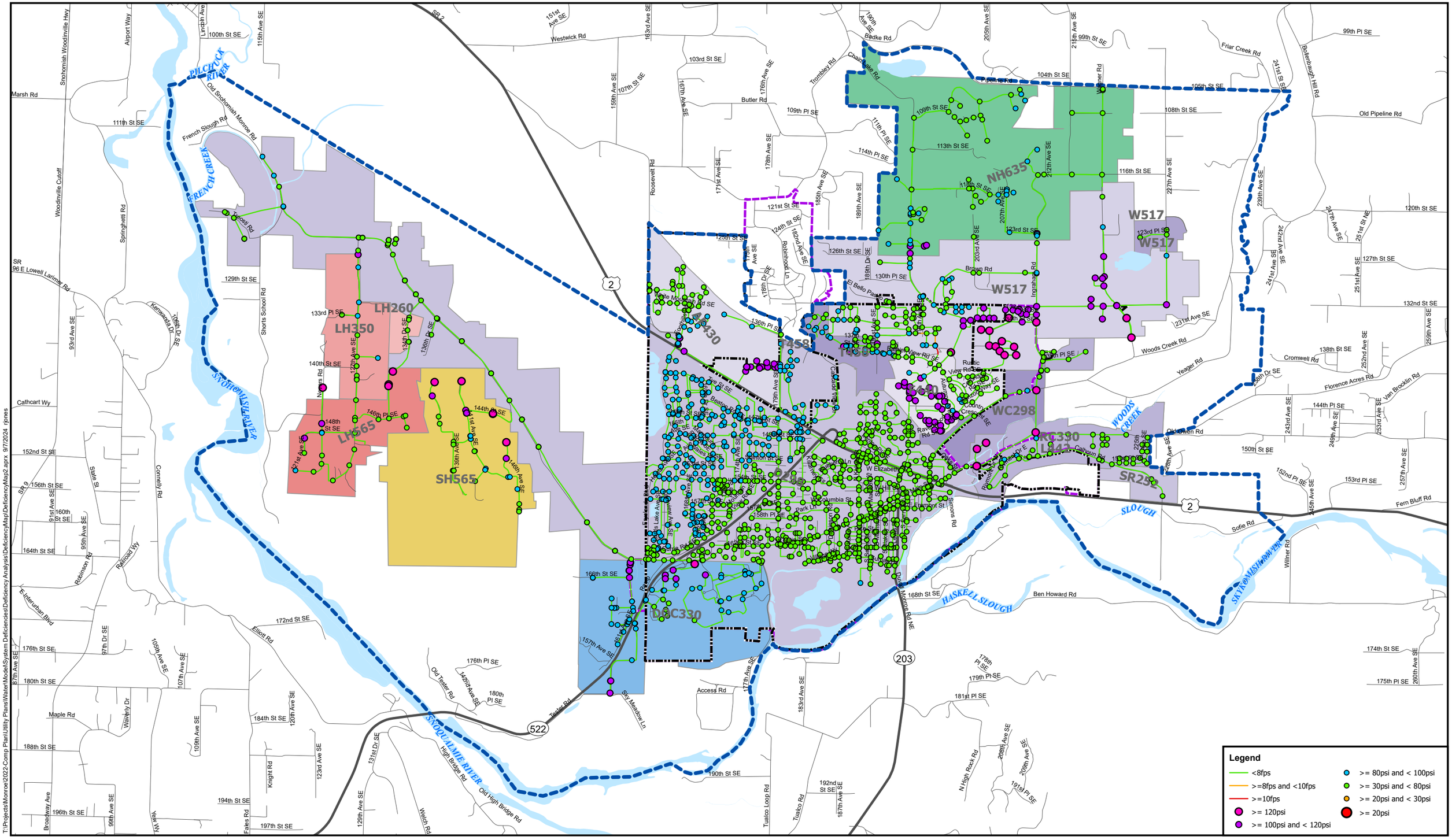
PILCHUCK RIVER
FRENCH CREEK
SNOHOMISH RIVER
SNOQUALMIE RIVER
WOODS CREEK
SLOUGH
HASKELL SLOUGH
SKYKOMISH RIVER
LH260
LH350
LH565
SH565
NH635
W517
WC298
DSC330
SR252
SR 2
522
203
Snohomish Woodinville Hwy
Airport Way
Marsh Rd
111th St SE
Woodinville Cutoff
Springhetti Rd
SR 96 E Lowell Larimer Rd
Cathcart Wy
152nd St SE
156th St SE
160th St SE
164th St SE
Robinson Rd
Railroad Wy
E Interurban Blvd
176th St SE
180th St SE
Maple Rd
188th St SE
196th St SE
Broadway Ave
99th Ave SE
97th Dr SE
87th Ave SE
93rd Ave SE
95th Ave SE
91st Ave SE
State St
Connelly Rd
Yew Wy
Waverly Dr
Kenwanda Dr
100th St SE
115th Ave SE
Old Snohomish Monroe Rd
French Slough Rd
129th St SE
Shorts School Rd
133rd Pl SE
134th Dr SE
136th Dr SE
140th St SE
142nd Ave SE
Nyers Rd
148th St SE
146th Pl SE
144th St SE
141st Ave SE
138th Ave SE
146th Ave SE
151st Ave SE
Westwick Rd
163rd Ave SE
159th Ave SE
107th St SE
103rd St SE
167th Ave SE
176th Ave SE
Butler Rd
109th Pl SE
Roosevelt Rd
171st Ave SE
178th Ave SE
185th Ave SE
189th Ave SE
121st St SE
124th St SE
125th St SE
175th Ave SE
182nd Ave SE
Robinhood Ln
118th Dr SE
189th Dr SE
126th St SE
130th Pl SE
El Bello Pass
Trombley Rd
Chain Lake Rd
Badke Rd
190th Ave SE
205th Ave SE
215th Ave SE
99th St SE
104th St SE
Pipeline Rd
109th St SE
111th Pl SE
113th St SE
114th Pl SE
116th St SE
118th St SE
207th Ave SE
212th Ave SE
123rd St SE
203rd Ave SE
Brown Rd
Ingraham Rd
Wagner Rd
108th St SE
105th St SE
227th Ave SE
239th Ave SE
241st St SE
Friar Creek Rd
Bollenbaugh Hill Rd
99th Pl SE
Old Pipeline Rd
120th St SE
247th Ave SE
251st St NE
242nd Ave SE
241st Ave SE
251st Ave SE
127th St SE
132nd St SE
231st Ave SE
Woods Creek Rd
Yeager Rd
138th St SE
Cromwell Rd
252nd Ave SE
259th Ave SE
258th Dr SE
Florence Acres Rd
Van Brocklin Rd
144th Pl SE
243rd Ave SE
249th Ave SE
253rd Ave SE
Old Owen Rd
225th Ave SE
150th St SE
152nd St SE
153rd Pl SE
257th Ave SE
245th Ave SE
Fern Bluff Rd
Sofie Rd
Willner Rd
174th St SE
175th Pl SE
260th Ave SE
Ben Howard Rd
168th St SE
Duvall Monroe Rd NE
178th Pl SE
179th Pl SE
181st Pl SE
183rd Ave SE
177th Ave SE
Access Rd
Tester Rd
Old Tester Rd
142nd Ave SE
176th Pl SE
180th Pl SE
Sky Meadow Ln
157th Ave SE
Old High Bridge Rd
High Bridge Rd
131st Dr SE
129th Ave SE
Watch Rd
190th St SE
192nd St SE
187th Ave SE
Tualco Loop Rd
Tualco Rd
N High Rock Rd
208th Ave SE
209th Ave SE
191st Pl SE
194th St SE
197th St SE
Fales Rd
Knight Rd
123rd Ave SE
109th Ave SE
107th Ave SE
105th Ave SE
184th St SE
120th Ave SE
Waverly Dr
Maple Rd
Elliott Rd
172nd St SE
Main St
Lewis St
Fremont St
W Elizabeth St
W Hill St
Columbia St
Park Ln
Blueberry Ln
Rivers Edge Dr
Kelsey Creek Rd
Lake Tye Rd
Lake Tye Cir
Kelsey Creek Cir
Kelsey Creek Ln
Kelsey Creek Pl
Kelsey Creek Dr
Kelsey Creek Way
Kelsey Creek Ct
Kelsey Creek Loop
Kelsey Creek Rd
Kelsey Creek Dr E
Kelsey Creek Dr

THIS PAGE INTENTIONALLY BLANK.

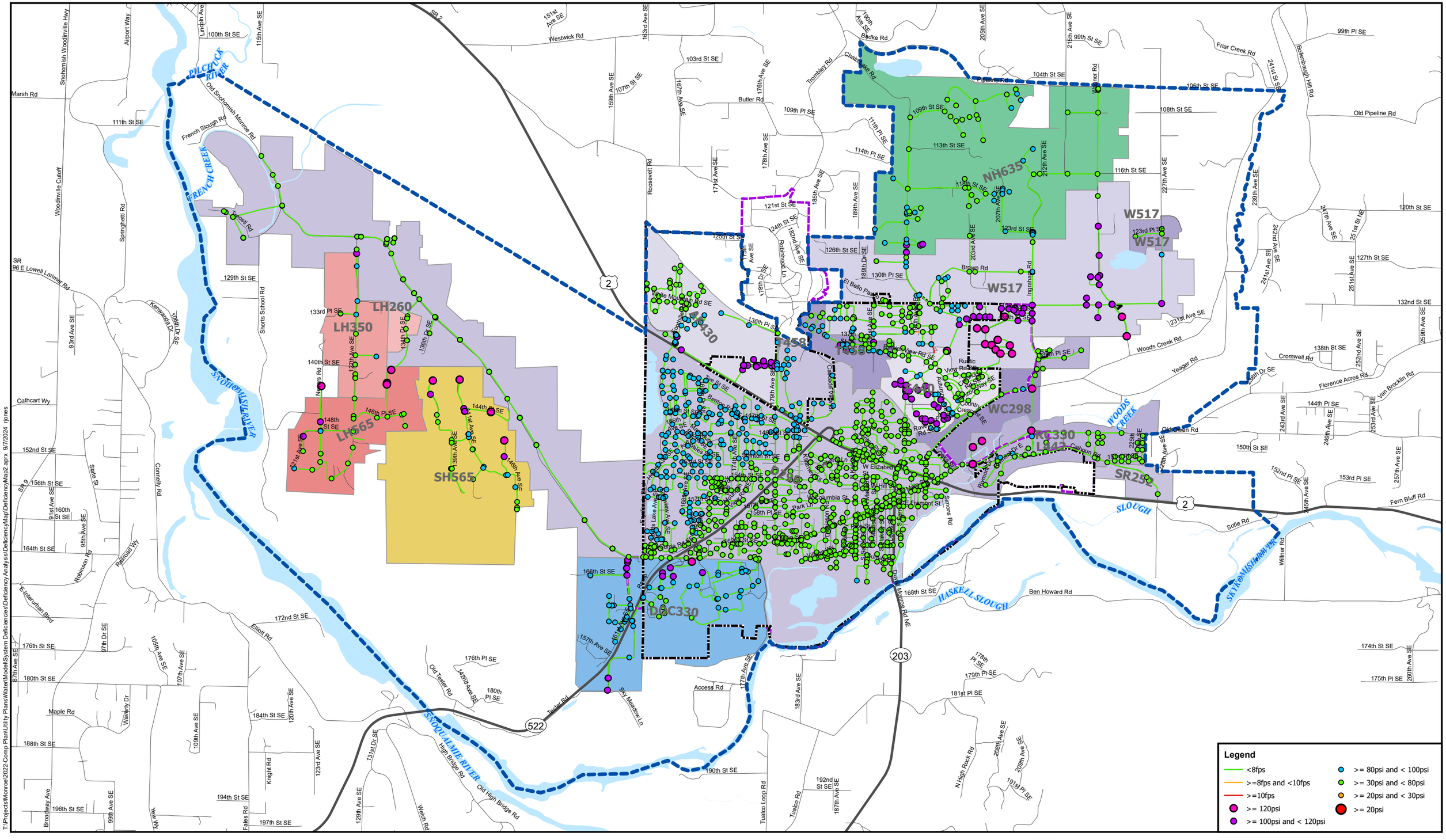

T:\Projects\Monroe\2022-Comp Plan\Utility Plans\WaterModel\System Deficiencies\Deficiency Analysis\DeficiencyMap\DeficiencyMap2.aprx 9/7/2024 rpnes

Water System: City of Monroe 2024

Snohomish County base data 2024

Data sources supplied may not reflect current or actual conditions. This map is a geographic representation based on information available. It does not represent survey data. No warranty is made concerning the accuracy, currency, or completeness of data depicted on this map.
BHC Consultants LLC., assumes no responsibility for the validity of any information presented herein, nor any responsibility for the use or misuse of the data.

N

0 0.25 0.5 1 Miles

2034 PHD Scenario

Utility Systems Plan - Water
City of Monroe, Washington
September 2024

Figure

W 6-10

COPYRIGHT © 2024 BHC CONSULTANTS LLC., ALL RIGHTS RESERVED

THIS PAGE INTENTIONALLY BLANK.

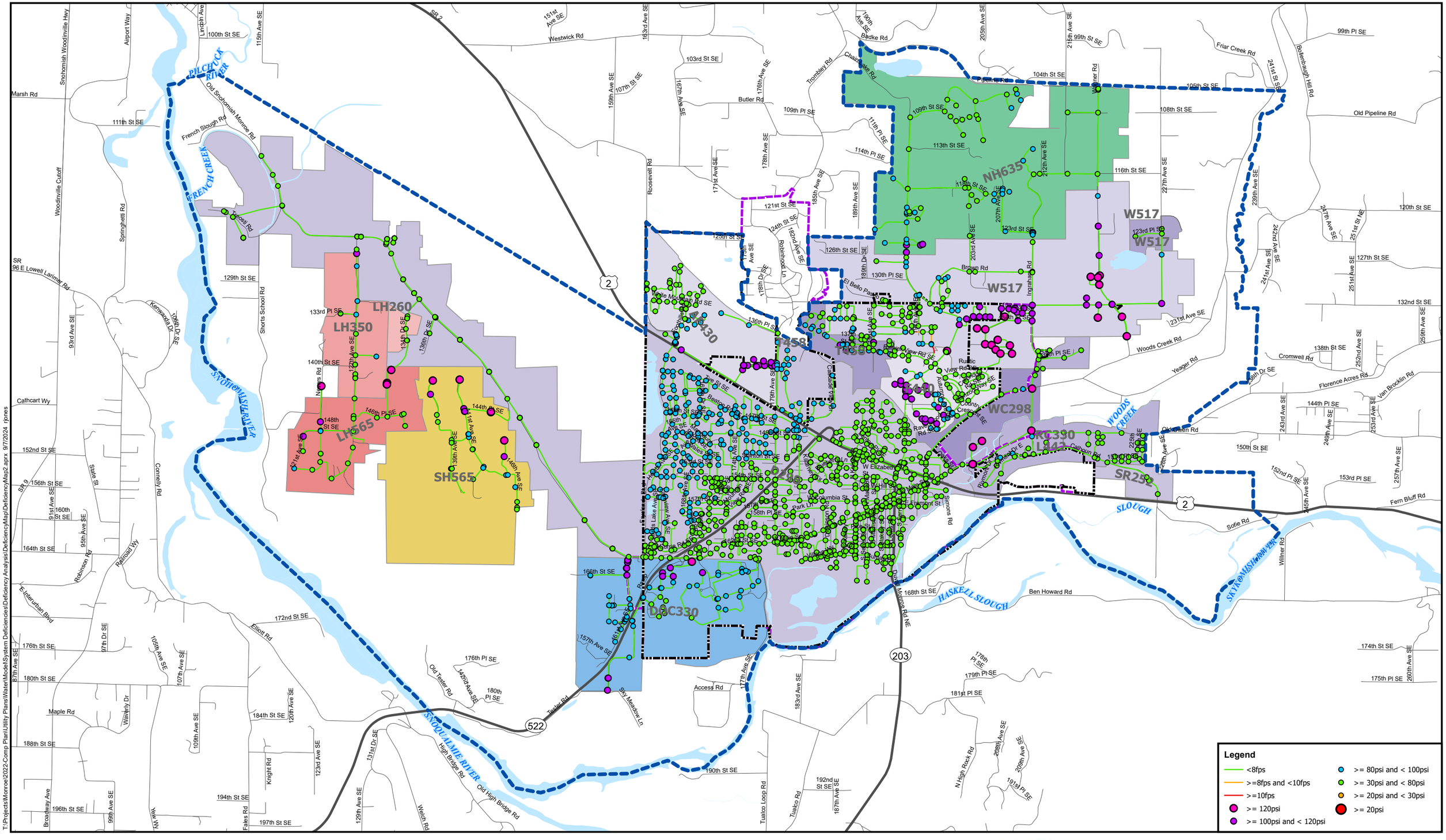

T:\Projects\Monroe\2022-Comp Plan\Utility Plans\WaterModel\System Deficiencies\Deficiency Analysis\DeficiencyMap\DeficiencyMap2.aprx 9/7/2024 rpnes

Water System: City of Monroe 2024

Snohomish County base data 2024

Data sources supplied may not reflect current or actual conditions. This map is a geographic representation based on information available. It does not represent survey data. No warranty is made concerning the accuracy, currency, or completeness of data depicted on this map.
BHC Consultants LLC., assumes no responsibility for the validity of any information presented herein, nor any responsibility for the use or misuse of the data.

N

0 0.25 0.5 1 Miles

2044 PHD Scenario

Utility Systems Plan - Water
City of Monroe, Washington
September 2024

Figure
W 6-11

COPYRIGHT © 2024 BHC CONSULTANTS LLC., ALL RIGHTS RESERVED

THIS PAGE INTENTIONALLY BLANK.

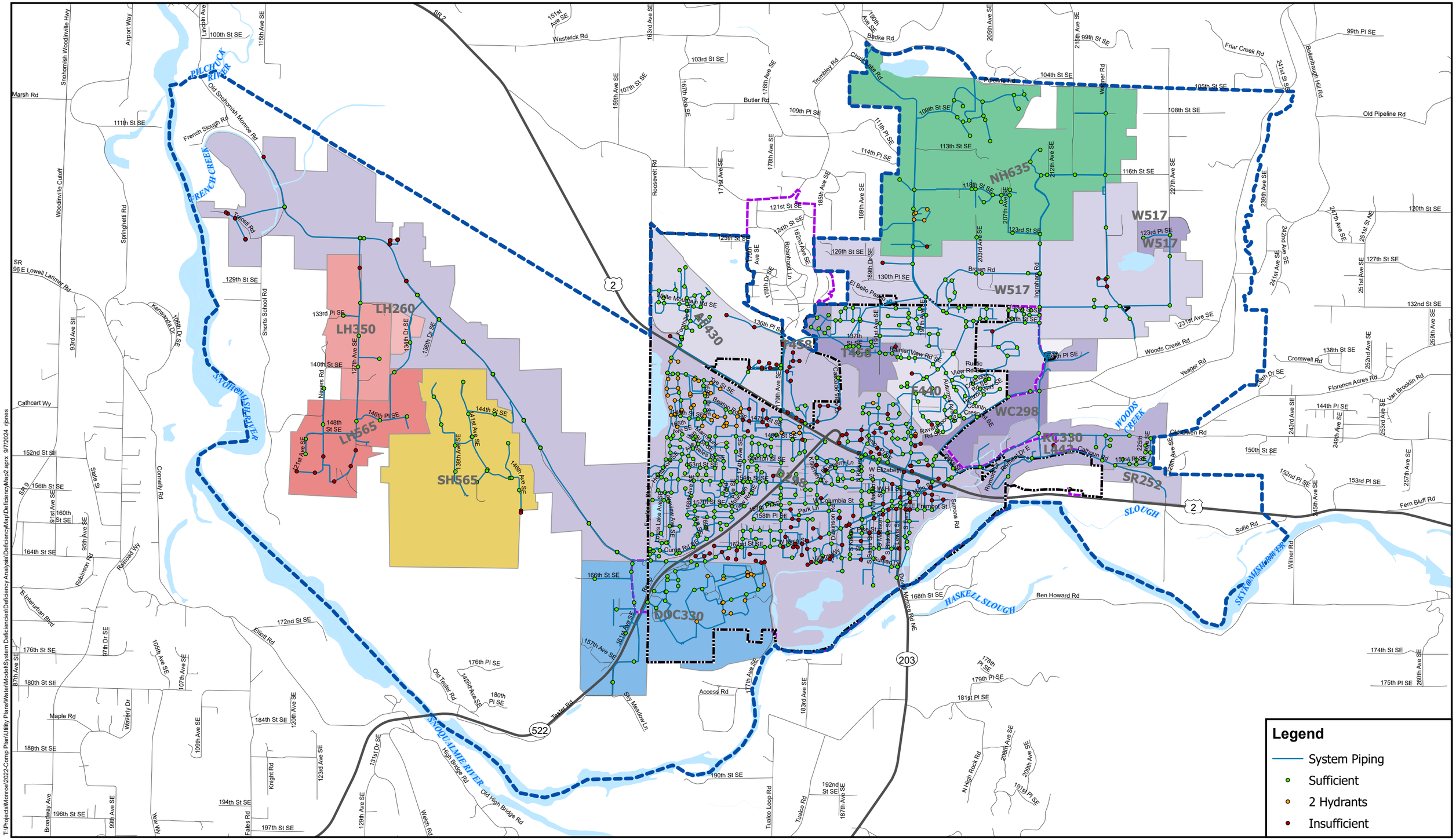

T:\Projects\Monroe\2022-Comp Plan\Utility Plans\Water\Model\System Deficiencies\Deficiency Analysis\DeficiencyMap\DeficiencyMap2.aprx 9/7/2024 rpnes

Water System: City of Monroe 2024

Snohomish County base data 2024

Data sources supplied may not reflect current or actual conditions. This map is a geographic representation based on information available. It does not represent survey data. No warranty is made concerning the accuracy, currency, or completeness of data depicted on this map.
BHC Consultants LLC., assumes no responsibility for the validity of any information presented herein, nor any responsibility for the use or misuse of the data.

N

0 0.25 0.5 1 Miles

2044 MDD Scenario with Fire Flow

Utility Systems Plan - Water
City of Monroe, Washington
September 2024

Figure
W 6-12

COPYRIGHT © 2024 BHC CONSULTANTS LLC., ALL RIGHTS RESERVED

THIS PAGE INTENTIONALLY BLANK.

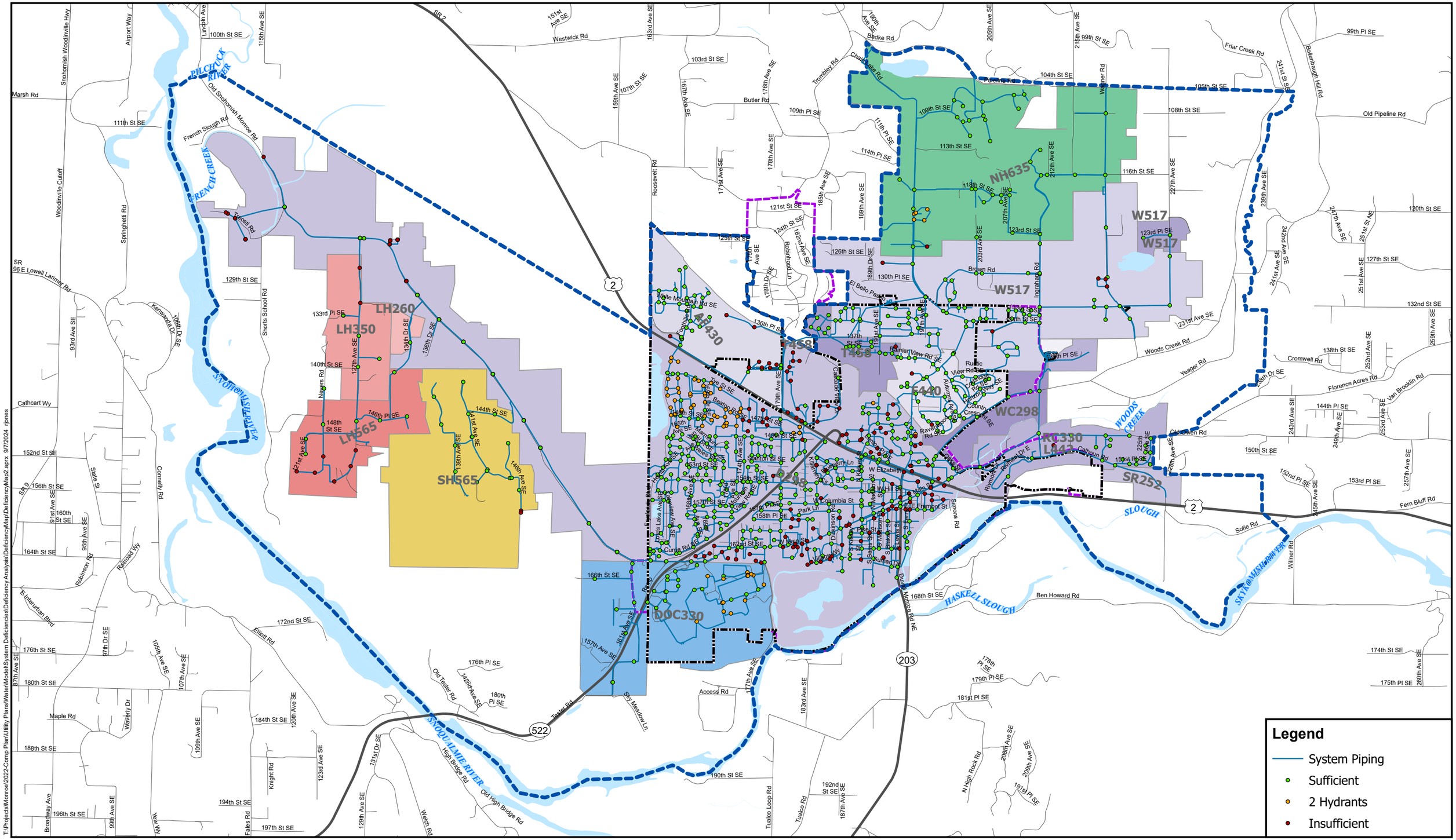

T:\Projects\Monroe\2022-Comp Plan\Utility Plans\Water\Model\System Deficiencies\Deficiency Analysis\DeficiencyMap\DeficiencyMap2.aprx 9/7/2024 rpnes

Water System: City of Monroe 2024

Snohomish County base data 2024

Data sources supplied may not reflect current or actual conditions. This map is a geographic representation based on information available. It does not represent survey data. No warranty is made concerning the accuracy, currency, or completeness of data depicted on this map.
BHC Consultants LLC., assumes no responsibility for the validity of any information presented herein, nor any responsibility for the use or misuse of the data.

N

0 0.25 0.5 1 Miles

2034 MDD Scenario with Fire Flow

Utility Systems Plan - Water
City of Monroe, Washington
September 2024

Figure
W 6-13

COPYRIGHT © 2024 BHC CONSULTANTS LLC., ALL RIGHTS RESERVED

THIS PAGE INTENTIONALLY BLANK.

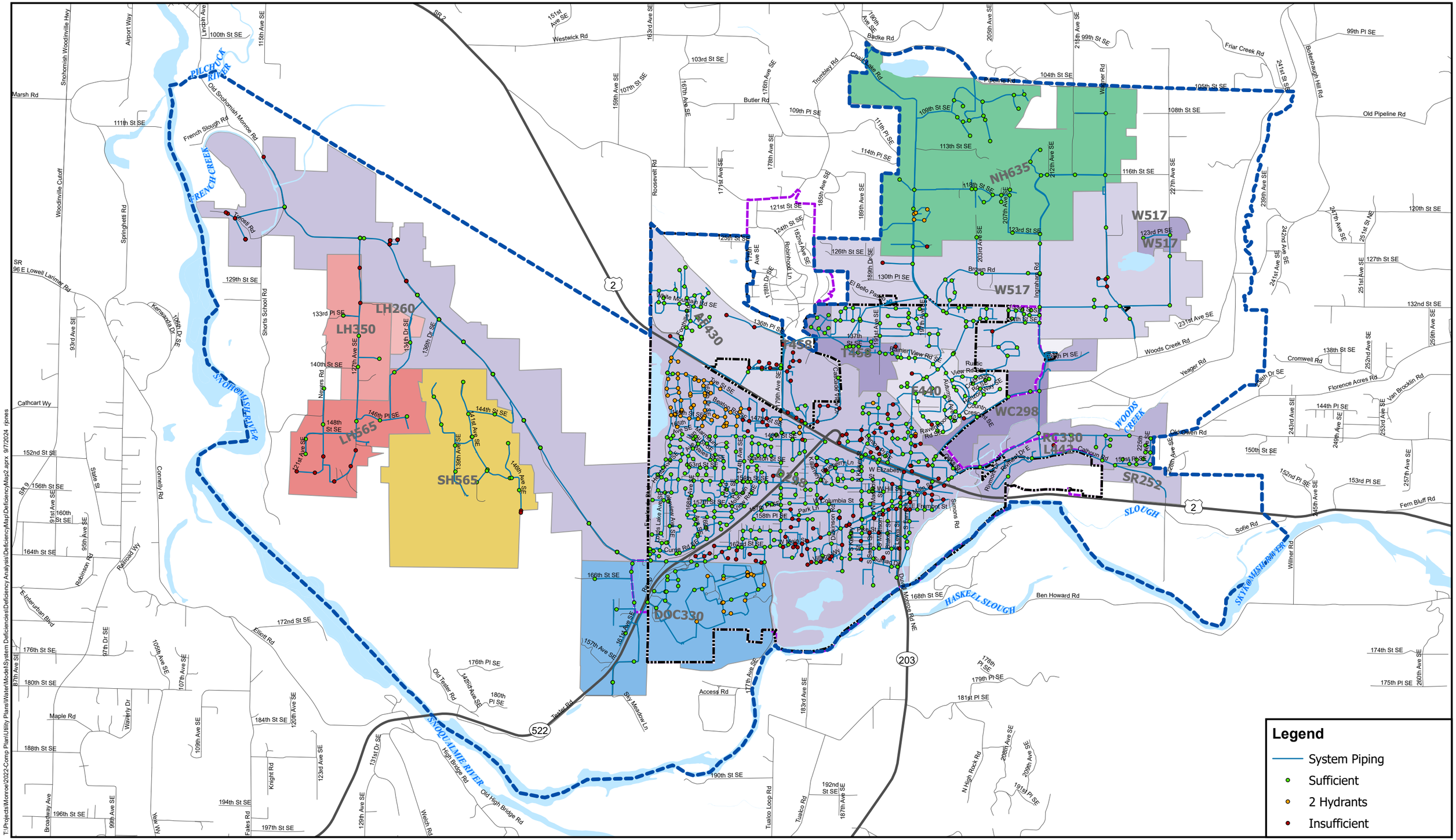

T:\Projects\Monroe\2022-Comp Plan\Utility Plans\Water\Model\System Deficiencies\Deficiency Analysis\DeficiencyMap\DeficiencyMap2.aprx 9/7/2024 rpnes

Legend

- System Piping
- Sufficient
- 2 Hydrants
- Insufficient

bhc CONSULTANTS

Water System: City of Monroe 2024

Snohomish County base data 2024

Data sources supplied may not reflect current or actual conditions. This map is a geographic representation based on information available. It does not represent survey data. No warranty is made concerning the accuracy, currency, or completeness of data depicted on this map.
BHC Consultants LLC., assumes no responsibility for the validity of any information presented herein, nor any responsibility for the use or misuse of the data.

N

0 0.25 0.5 1 Miles

MONROE WASHINGTON

2044 MDD Scenario with Fire Flow

Utility Systems Plan - Water
City of Monroe, Washington
September 2024

Figure
W 6-14

COPYRIGHT © 2024 BHC CONSULTANTS LLC., ALL RIGHTS RESERVED

THIS PAGE INTENTIONALLY BLANK.

Chapter W 7 Water Use Efficiency Program

Water use efficiency contributes to the long-term water supply reliability and promotes the good stewardship of available water resources. This chapter aims to outline how the City will strive to be good stewards of the water supply over the next twenty years in compliance with RCW 90.03.360, WAC 173-173, WAC 246-290-496, and WAC 246-290-820. Production, consumption and non-metered water loss are tracked monthly as outlined in Chapter W 5 – Basic Planning Data.

W 7.1 Source and Service Metering

All water system customers are required to be metered in conformance with Monroe Municipal Code (MMC) and the Public Works Design & Construction Standards.

The City has several fire system taps used to supply both residential and commercial fire sprinkler systems; many of these taps are not metered. In accordance with standard industry practice, these systems are monitored annually. Calculations of consumption are done as fire incidents occur, and during cross connection control site surveys. Currently the City requires all new fire system taps to be metered, and where prudent the use of a Double Check Detector Assembly (DCDA) with bypass meter is allowed as well.

The City utilizes Automated Metering Infrastructure (AMI) which includes “smart” metering devices. These “smart meters” are capable of delivering meter reads to the customer and utility billing staff in nearly real time via the internet, and these meters can notify City staff regarding leaks and dry pipe alarms when system main failure may occur. Continued replacement of water meters is necessary at the end of their useful service life. Annual meter replacement is included in the Capital Improvement Program (CIP) as improvement W-E-7. Given the expected meter service life of 20 years, it is expected that CIP W-E-7 will take place from year 17 to year 20 of the current CIP plan.

W 7.2 Distribution System Leakage

Distribution System Leakage (DSL) is the total amount of water produced and purchased less the authorized system consumption per WAC 246-290-820(2). Water systems are required to adopt a water loss action plan when DSL exceeds an average of 10 percent over the most recent three-year period per WAC 246-290-820. Table W 7-1 provides the City’s DSL volumes and annual percentages for the most recent years Annual Performance Reports as reported in the Water Use Efficiency (WUE) reports included in Appendix W-D which have been filed with the Washington State Department of Health (DOH).

Table W 7-1
System Distribution System Leakage

Reporting Period (December 16 – December 15)	Distribution System Leakage Volume (gallons)	Distribution System Leakage Percentage
2013	63,529,136	8.8%
2014	47,616,932	6.4%
2015	40,115,988	5.0%
2016	60,596,240	7.6%
2017	60,078,612	7.2%
2018	44,107,489	5.6%
2019	50,247,652	6.5%
2020	71,718,322	9.2%
2021	-89,279,956	-13.9%
2022	-5,471,620	-0.7%

Note:
1) The 2021 and 2022 Water Use Efficiency Annual Performance Report filed does not show an accurate amount of water purchased due to the failure of City of Everett supply master meters.

The current three-year average DSL is 7.1 percent based on the years 2018, 2019, and 2020 excluding 2021 and 2022 due to the noted metering issues. The City's goal from the 2015 Utility Systems Plan was to introduce measures through the WUE Program, to reduce the three-year DSL average below the 10 percent threshold by the end of 2016. This goal was accomplished through the implementation of these measures and the City continues to support efforts to better account for DSL or otherwise unauthorized water.

W 7.3 Water Use Efficiency Program

This City is operating with an active WUE program in compliance with WAC 246-290-100(4)(f)(i) and WAC 246-290-810. Additionally, the City's WUE Program reflects the cooperation of local businesses and residents alike in an effort to continue as conscientious stewards of the local region's valuable watershed. The City's program is focused on meeting the co-adopted regional goal, which is shared with the City of Everett. This goal is also shared with many of the members of the Everett Water Users Committee (EWUC), an organization in which the City is an active participant. The regional conservation goal is to reduce the regional demand for water by 1.4 MGD by 2029.

The City's goal from the 2015 Utility Systems Plan was to reduce the 3-year running average of leakage in the distribution system from 11.9 percent down to below 10 percent prior to the end of 2016. The City met this goal and has continued to report under 10 percent leakage. In an effort to achieve the WUE goals the City has implemented six measures as required by WAC 246-290-810 for systems serving between 2,500 and 9,999 connections. The 2023 Water Facilities Inventory (WFI) updated in September 2023 (included in Appendix W-A), indicates the City's RSA served a total of 8,689 connections. The following six measures have been adopted by the City for the 2020 – 2024 WUE program.

1. Conservation education developed for staff and public.
2. Staff education to recognize water misuse.
3. Indoor and outdoor water conservation kits for single and multi-family homes.
4. Hydrant meter rental for construction sites.
5. Reclaimed water-use at the City's WWTP.
6. Leak detection was done to another 20% of the water system this last year.

The leak detection program is funded by the City's meter replacement program which includes a systematic approach to finding and repairing leaks leveraging the customer AMI. Other activities are included as part of the City staff's typical duties, and is covered in staff full-time equivalents (FTE) funding sources. The City's utility billing process includes tracking historical consumption information for large customers and is part of the customer billing funding allocation. The City's plumbing code requires water efficient fixtures for new construction and extensive remodels.

The WUE education efforts are funded through partnership with the City of Everett as part of the regional WUE Program overseen by EWUC. Additional education is circulated to encourage voluntary lawn watering restriction as well as low water use landscaping. The City will continue to evaluate the WUE by monitoring system DSL as defined in WAC 246-290-820(2).

W 7.4 Water Use Efficiency Savings

The City's co-adopted regional conservation goal from the 2015 Utility Systems Plan was to reduce the regional demand for water by 1.86 million gallons per day (mgd) by 2018. Additionally, the City sought to reduce their 3-year running average of distribution system leakage from 11.6 percent to below 10 percent by the end of 2016. Historic demand shown in Table W 7-1 shows the effectiveness of the program since the 2013. Based on the historical success of the City's WUE and the current system goals and measures, a reduction of approximately 0.51 percent per year is assumed over the next 20 years. This reduction results in a 5 percent reduction in Equivalent Residential Unit (ERU) for the ten (10) year planning horizon and a 10 percent reduction in ERU for the 20 year planning horizon. Based on the population projection and flow analysis in Chapter W 5 Basic Planning Data, Table W 7-2 spans projected water use with and without WUE from 2023 through 2044, and 2050. Note that Table W 7-2 uses 2023 as a base year and applies WUE starting in 2024.

Table W 7-2
Projected Water Use With and Without WUE

Year	ADD		MDD	
	Without WUE (gpd)	With WUE (gpd)	Without WUE (gpd)	With WUE (gpd)
2023	2,168,906	2,168,906	3,925,720	3,925,720
2024	2,187,555	2,176,377	3,959,475	3,939,242
2025	2,206,204	2,183,715	3,993,229	3,952,524
2026	2,224,853	2,190,920	4,026,984	3,965,565
2027	2,243,503	2,197,996	4,060,740	3,978,373
2028	2,262,152	2,204,941	4,094,495	3,990,943
2029	2,280,731	2,211,691	4,128,123	4,003,161
2030	2,299,450	2,218,449	4,162,005	4,015,393
2031	2,318,029	2,224,946	4,195,632	4,027,152
2032	2,336,678	2,231,385	4,229,387	4,038,807
2033	2,355,328	2,237,701	4,263,144	4,050,239
2034	2,373,977	2,243,893	4,296,898	4,061,446
2035	2,392,626	2,249,964	4,330,653	4,072,435
2036	2,411,275	2,255,914	4,364,408	4,083,204
2037	2,429,924	2,261,745	4,398,162	4,093,758
2038	2,448,503	2,267,393	4,431,790	4,103,981
2039	2,467,222	2,273,051	4,465,672	4,114,222
2040	2,485,802	2,278,466	4,499,302	4,124,023
2041	2,504,520	2,283,893	4,533,181	4,133,846
2042	2,523,100	2,289,078	4,566,811	4,143,231
2043	2,541,818	2,294,277	4,600,691	4,152,641
2044	2,570,936	2,308,700	4,653,394	4,178,747
2050	2,663,696	2,319,591	4,821,290	4,198,460

Chapter W 8 Source Water Protection

The City's water is supplied by the City of Everett via Transmission Main No. 5 whose source is a combination of the Chaplain Reservoir and the Spada Reservoir which are treated at the Everett Water Filtration Plant. For additional information on the source of supply and these supply characteristics, water rights and source water protections, please refer to the City of Everett Washington 2020 Comprehensive Water Plan[1].

[1] City of Everett and HDR Engineering. (2020). *City of Everett Washington 2020 Comprehensive Water Plan.* Everett Washington: City of Everett.

THIS PAGE INTENTIONALLY BLANK.

Chapter W 9 Operations and Maintenance Program

W 9.1 Water System Management and Personnel

The ultimate authority and control of the water system lies with the elected officials. A full Organizational Chart for the City Public Works Department is included in Common Elements Chapter 2 – Introduction. In addition, personnel responsible for the daily management, maintenance, operation, and quality control are employed by the City and are listed below:

- Administration:
  - Jakeh Roberts, Public Works Director, Water Distribution Manager 3, Cross Connection Control Specialist.
  - Normal Day-to-Day Operations and Preventative Maintenance.
  - John Lande, Operations and Maintenance (O&M) Division Manager, Water Distribution Manager 3.
- Water Supervisor:
  - Dane DeGross.
- Water Quality Monitoring:
  - Scott Barr, Water Quality Lead Water Distribution Manager 4, Cross Connection Control Specialist, Backflow Assembly Tester.
- Emergency Response:
  - 24 hour On-Call System.
- Cross-Connection Control:
  - Josh Nicholas, Cross Connection Control Specialist, Backflow Assembly Tester.
- Implementation of Improvement Program:
  - Scott Peterson, City Engineer.
- Budget Formulation:
  - Jakeh Roberts, Public Works Director.
- Response to Complaints:
  - Scott Barr, Water Quality Lead, Water Distribution Manager 4, Cross Connection Control Specialist, Backflow Assembly Tester.
- Public/Press Contact:
  - John Lande, O&M Division Manager Billing.
  - Becky Hasart, Finance Director.

W 9.1.1 Operator Certification

The water system personnel registered by the State of Washington Water Works Certification Law are listed in Table W 9-1.

Table W 9-1
Water System Personnel Registrations

Name	Title	Certification
Jakeh Roberts	Public Works Director	▪ Water Distribution Manager 3 ▪ Cross Connection Control Specialist
John Lande	O&M Division Manager	▪ Water Distribution Manager 3
Jordan Ottow	Storm and Street O&M Manager	▪ Water Distribution Manager 3 ▪ Cross Connection Control Specialist ▪ Backflow Assembly Tester
Ryan Anderson	Construction Inspector	▪ Water Distribution Manager 2 ▪ Cross Connection Control Specialist
Dustin Harvie	Streets and Storm Supervisor	▪ Water Distribution Manager 2
Michael Tuomisto	Facilities and Fleets Supervisor	▪ Water Distribution Manager 2
Scott Barr	Water Quality Lead	▪ Water Distribution Manager 4 ▪ Cross Connection Control Specialist ▪ Backflow Assembly Tester
Trevor Ore	Customer Service Specialist	▪ Water Distribution Manager 1 ▪ Cross Connection Control Specialist ▪ Backflow Assembly Tester
Aaron Amberson	Inspector	▪ Water Distribution Manager 1
Josh Nicholas	CCS/Water Quality Specialist	▪ Cross Connection Control Specialist ▪ Backflow Assembly Tester

The City's Water System is committed to ensuring that certified operators comply with professional growth requirements. To this end, the City provides funding and time for ongoing training.

W 9.2 Operations and Preventative Maintenance

W 9.2.1 Identification of Major System Components

Major system components of the City Water System and a system hydraulic profile showing the interactions of these components are included in Chapter W6 System Analysis and Asset Management.

W 9.2.2 Routine System Operation

Under normal operating conditions the water system is largely self-regulating. The system's six reservoir locations are normally "on-line" at all times. Reservoir water surface elevations are controlled by altitude control valves, which allow water into the reservoir when the water surface elevation reaches a predetermined point and shuts off the inflow of water when the reservoir is full, or by booster pump station (PS) control. Pumps in pump stations are controlled based on water surface elevations in the discharge

reservoirs or system pressure sensors. Normal reservoir and pump station operation are summarized in Table W 9-2 and Table W 9-3.

Table W 9-2
Normal Operations – Reservoirs

Reservoir Name	Zone Served	Supply Zone	Supply Facility
Trombley 2 and 5	Trombley 458	Chain Link 517	PRV/Altitude Valve
North Hill	North Hill 635	North Hill Tap	North Hill PS
Ingraham Hill	Rivemont/Calhoun 330, Local 442, and Woods Creek 298	Wagner 517	PRV/Altitude Valve
DOC 1 and 2	DOC 330	Downtown 298	Tester Rd PS and 177th PS
Lord Hill A and B	Lord Hill 565	Downtown 298	Lord Hill PS
Spring Hill A and B	Spring Hill 565	Downtown 298	Spring Hill PS

Table W 9-3
Normal Operations - Pump Stations

Pump Station Name	Supply Zone	Discharge Zone	Control Facility
Trombley PS	Trombley 458	Chain Link 517	Pressure in Chain Link 517
North Hill PS	North Hill Tap	North Hill 635	North Hill Reservoir
Tester Road PS	Downtown 298	DOC 330	DOC 1 and 2
177th PS	Downtown 298	DOC 330	DOC 1 and 2
Lord Hill PS	Downtown 298	Lord Hill 565	Lord Hill Reservoir
Spring Hill PS	Downtown 298	Spring Hill 565	Spring Hill Reservoir

Reservoir levels and booster pump status are remotely monitored using the City's Supervisory Control and Data Acquisition (SCADA) system. This SCADA system provides emergency notification if problems are detected. In addition to the continuous remote monitoring, each reservoir and booster pump station is inspected weekly, and flow meter readings recorded.

W 9.2.3 Monitoring Frequency

All services in the City's Retail Service Area are metered and read monthly. Other system parameters are monitored as shown in Table W 9-4.

Table W 9-4
System Monitoring Frequency

Task	Frequency
Cross Connection Control	Daily
Cl_2 Residual	Daily
Reservoir Inspection	Weekly
Pump Station Inspection	Weekly
Meter Reading	Monthly
Billing	Monthly
DOH Cl_2 Residual Report	Monthly
DOH Bacteriological Report	Monthly
Leak Detection	Monthly
Water Facilities Inventory Report	Annually

W 9.2.4 Preventative Maintenance Program

Preventive maintenance is an ongoing program that is designed to reduce component failures and the need for unplanned repairs and/or replacement. A good preventive maintenance program helps to ensure that equipment and appurtenances will be able to perform their intended function both in the course of daily operation and in emergency situations.

Periodic maintenance of all components of the municipal water system is necessary to ensure continuous, uninterrupted service. General maintenance of many items may include checking set points, checking security, painting exposed surfaces, lubricating moving parts, cleaning, rebuilding, and assessing overall operation for more significant repairs or replacement.

Booster Pump Stations

The City operates and maintains six water booster pump stations. Each station is continuously monitored by the SCADA system. City staff physically check each booster station weekly to inspect for leaks, pump and motor operation, and system pressures and flows. Data is then checked against readings on the SCADA system to verify accuracy. Pump run times, starts and stops are monitored for maintenance purposes. Oil is changed on all motors after 1,000 hours of operation and pump seals are greased weekly.

Reservoirs

In general, reservoir maintenance includes weekly inspection for security purposes. Inspections of interior and exterior surfaces and coatings, integrity of all hatches, ladders, earthquake straps, sight gauges, overflow, air vent, foundation/footings, and screen openings and condition of the interior are done on an annual basis.

Hydrants

All hydrants are inspected routinely, typically once every five years as part of system flushing, for proper operation and function. The preventive maintenance consists of the following as a minimum:

- Check for leakage and visual damage.
- Open completely to adequately flush the system and valve.
- Check all nozzle and cap threads, clean and lubricate with light oil.
- Replace lost or damaged gaskets.
- Lubricate the operating nut in accordance with the manufacturer's recommendations.
- Check the hydrant gate valve in accordance with the valve maintenance schedule. Be certain that the auxiliary gate valve is left in the open position.
- Inspect the waste opening in the waste drainage system to be sure the hydrant will be protected in cold weather.
- Record the inspection and date and make note of deficiencies requiring follow-up. Coordinate all activities with the fire department.
- Coating as necessary.

Valves

All valves are inspected routinely for proper operation and function. The preventive maintenance consists of the following as a minimum:

- Locate the valve boxes and check the accuracy of the tie measurements and the permanence of the landmarks with the valve book (atlas) information.
- Check valve box and cover for damage.
- Insert the wrench and make sure that all debris that would inhibit operation of the valve is removed.
- Operate the valve for a complete cycle (opened and closed) if possible, checking the number of turns required for full operation of the valve.
- Record the inspection and date and list all deficiencies that require follow-up maintenance.
- Raising of the box and cover to street grade.
- Removal of dirt, rocks, and debris.
- Other repair or replacement.

Pressure Control Valves

The City currently operates 45 pressure control valves within the distribution system and at the reservoirs. Most of these valves are Pressure Reducing Valves (PRV) with the remainder being Pressure Sustaining Valves (PSV). Additionally, the City maintains and operates surge control valves in addition to these PRVs and PSVs.

The purpose of the PRV stations is to effectively reduce the water pressure to a safe usable pressure to the service area. The water department maintains and inventories each station within the system. Each station

has a number and detailed inventory. Information included in this inventory consists of size, type of valve, and brand of valve. Inlet and outlet pressure is also tracked as well as maintenance and service records. An inventory of most commonly used repair parts is also maintained for emergency repairs if required. Pressure Reducing Valves (PRV) valves are monitored daily by tracking the water system pressure in various zones. All PRV valves are cleaned and exercised annually. Valves are then readjusted and tested before returning to service. PRV valves are on a five-year re-build schedule at which time they are disassembled and inspected, any worn parts are replaced, and the valve is reassembled before returning to service. Each station is equipped with upstream and downstream pressure gauges and each valve is equipped with manual sight gauges for visual confirmation of valve status (open or closed).

W 9.2.5 Equipment, Supplies and Chemical Listing

The City's Public Works Department maintains reserve maintenance materials and operational supplies. An inventory of pipes of all sizes and types that are in use in the system is stored at the Public Works Yard. Appurtenances such as fittings, valves, and hydrants are also held in stock. These materials are not only available for maintenance of the system in emergency conditions, but all new construction is also done from this rotated supply. Chemicals for sample monitoring are purchased in bulk. These supplies are rotated as they are used.

The City's Public Works Department maintains up-to-date equipment, supplies, and chemical lists including the contact information for service representatives of major water system components and chemical suppliers, manufacturer's technical specifications for components and chemicals, and operations and maintenance guidebooks.

W 9.3 Comprehensive Water Quality Monitoring

Monitoring the quality of the water supply delivered to individual customers is the responsibility of the City in compliance with WAC 246-290-300. The standards of quality that have been specified by rules and regulations are intended to apply throughout the distribution system unless otherwise specified. The City's monitoring program is shown in Table W 9-5 and is described below. All analyses are performed by the State Public Health Laboratory or laboratories holding a current certificate of approval from the Department, except for free chlorine residual, which may be determined by staff. Appendix W-G includes the Customer Confidence Reports (CCR)s from 2018 through 2023, and water quality analysis results included in this section are from the 2023 CCR.

Table W 9-5
Water System Sampling and Testing Frequency Schedule

Sample Type	Frequency of Sampling
Bacteriological	Twenty-five distribution system samples per month.
Disinfection By-Products	Four samples taken quarterly (four TTHM, four HAA5).
Chlorine Residual	Daily.
Lead and Copper	Once every three years.
Inorganic Chemical and Physical	As directed by DOH.
Organic Chemicals	As directed by DOH.
Radionuclides	As directed by DOH.

W 9.3.1 Bacteriological

A minimum of 25 bacteriological samples are collected monthly from representative points in the distribution system along with six samples from reservoirs and pump stations. This minimum number of samples is increased as the population served increases. The current locations for bacteriological testing are shown in Figure W 9-1. For more information, the City's Coliform Monitoring Plan is included as Appendix W-H.

W 9.3.2 Disinfectant By-Product Monitoring

The Stage 2 Disinfectants and Disinfection Byproducts Rule (Stage 2 Rule) establishes monitoring requirements for total trihalomethanes (TTHM) and haloacetic acids (HAA5). The U.S. Environmental Protection Agency (EPA) published the Stage 2 Rule in January 2006, and Washington State assumed responsibility for the Stage 2 Rule on January 4, 2010. The Stage 2 Rule applies to all community and nontransient noncommunity (NTNC) Group A water systems that deliver water continuously treated with a primary or residual disinfectant.

The City's Water System is required to take four disinfection byproducts (DBP) samples quarterly from representative points throughout the system based off previous monitoring compliance programs. Samples are tested at selected certified laboratories. Additionally, note that the City maintains a daily determination of free chlorine at representative locations. The samples are collected and analyzed by the City staff. A map showing the locations for the DBP sampling is shown in Figure W 9-1. Table W 9-6 shows the 2023 CCR water quality analysis results for regulated contaminants and detected unregulated contaminants as part of the City's coliform monitoring plan. The City is in compliance with all considered contaminants. For more information, The City's Disinfectant By-Product Monitoring Plan is included as Appendix W-I.

Table W 9-6
2023 Water Quality Analysis Results

Parameter (Unit)	Ideal Level/Goal (MCLG)	Maximum Allowable (MCL)	Range or Other	Average or Highest Result	Comply
Total Coliform Bacteria (percent positive)	0 %	5 % positive per month	none	0 %	Yes
Fluoride (ppm)	2	4	0.5-0.8	0.7	Yes
Chlorine (ppm)	4.0 (MRDLG)	4.0 (MRDL)	0.2-1.1	0.7	Yes
Haloacetic Acids (5) (ppb)	n/a	60	24-41	32	Yes
Total Trihalomethanes (TTHM) (ppb)	n/a	80	27-54	41	Yes
Turbidity	n/a	TT	100 %	0.04	Yes
Bromodichloromethane (ppb)	0	Unregulated	1.4-3.1	2.2	
Chloroform (Trichloromethane) (ppb)	70	Unregulated	25-63	42	
Dichloroacetic Acid (ppb)	0	Unregulated	4-18	11	
Trichloroacetic Acid (ppb)	20	Unregulated	15-19	17	

W 9.3.3 Lead and Copper

An analysis for lead and copper is completed in conjunction with the City of Everett's consolidated water sampling and monitoring plan and is repeated every three years. Table W 9-7 includes the lead and copper results included in the City's 2023 CCR. The City is in compliance with lead and copper levels. For additional information, Appendix W-J includes the Lead and Copper Monitoring Plan.

Table W 9-7
Lead, Copper, and pH Results

Parameter (unit)	Ideal Level/Goal (MCLG)	Action Level (AL)	90th % Level	Homes Exceeding Action Level
Lead (ppb)	0	15	2.0 5.2	0 of 108 (0 of 4)
Copper (ppm)	1.3	1.3	0.093 0.1	0 of 108 (0 of 4)
pH	Daily Average 7.6	Minimum Daily Average 7.3	Average 7.6	Minimum 7.1

Inorganic Chemical and Physical Contaminants

Testing for inorganic chemical and physical contaminants is completed as directed by Washington State Department of Health (DOH). The City does not have a set schedule for testing of these contaminants.

Organic Chemicals

Testing for organic chemicals is completed as directed by DOH. The City does not have a set schedule for testing of these contaminants.

Radionuclides

Testing for radionuclides is completed as directed by DOH. The City does not have a set schedule for testing of these contaminants.

Lead Service Line Inventory

The City is developing a Lead Service Line Inventory as directed by DOH and the EPA Lead and Copper Rule Revisions in 40 CFR 141. The initial inventory will be submitted to the State by October 16, 2024. The City will notify every customer served by a lead, galvanized requiring replacement, or lead status unknown service line within 30 days of completing and submitting the inventory.

W 9.3.4 Per- and Poly- fluoroalkyl Substances (PFAS)

The City is aware of the United States Environmental Protection Agency's (EPA) final National Primary Drinking Water Regulation for six types of PFAS. The City receives its drinking water from the City of Everett sources and the City of Everett will be conducting source sampling. The City will stay up-to-date on sampling requirements as they are developed and adopted.

THIS PAGE INTENTIONALLY BLANK.

Coliform Sampling Locations	
1	12845 Phillips Ridge Rd
2	17288 Beaton Rd
3	16886 Wales St
4	17510 Mountain View Rd
5	16926 161st Ave SE
6	15113 141st Ave SE
7	15605 139th Ave SE
8	13710 134th Dr SE
9	12814 127th Ave SE
10	12109 Old Snohomish Monroe Rd
11	16924 West Main St
12	17585 163rd Pl SE
13	17839 160th Pl SE
14	17201 136th Pl SE
15	14405 179th Ave SE
16	18470 Blueberry Ln
17	324 Elizabeth St
18	408 Park St
19	330 Sumac Dr
20	135 Charles St
21	15423 Calhoun Rd
22	13223 Wagner Rd
23	20309 118th St
24	12531 Chain Lake Rd
25	19176 132nd St
	Reservoirs
1	12918 150th St SE
2	17302 170th Dr SE
3	13803 Ingraham Rd
4	10805 202nd Ave SE
5	20218 Pipeline Rd
6	13125 191st Ave SE

Disinfection By-Products Location

Location 1: 17201 136th Place
Location 2: 16886 Wales Street SE
Location 3. 16423 Tester Road
Location 4: 11431 Old Snohomish-Monroe Road

Legend

- Water Mains
- Water Retail Service Area
- City of Monroe Boundary
- Water Body

Water System and City Boundaries: City of Monroe 2024

Snohomish County base data 2014
Data sources supplied may not reflect current or actual conditions. This map is a geographic representation based on information available. It does not represent survey data. No warranty is made concerning the accuracy, currency, or completeness of data depicted on this map.
BHC Consultants LLC., assumes no responsibility for the validity of any information presented herein, nor any responsibility for the use or misuse of the data.

N

0 0.25 0.5 1 Miles

Bacteriological & Disinfection By-Product Test Locations
Utility Systems Plan - Water
City of Monroe, Washington
September 2024

Figure
W 9-1

COPYRIGHT © 2024 BHC CONSULTANTS LLC., ALL RIGHTS RESERVED

P:\Mapping\Maps_Generated\Monroe\projects\22-10808.00 - MIG - Monroe Comprehensive Plan\002 - Water System Plan\maps\Fig W 9.1 Test Locations 11x17.mxd 5/14/2024 rjones

THIS PAGE INTENTIONALLY BLANK.

W 9.4 System Operations Plans and Procedures

W 9.4.1 Emergency Preparedness and Response

The City Water System has prepared a water system vulnerability assessment and emergency response plan as required by Section 1433(b) of the Safe Drinking Water Act as amended by the Public Health Security and Bioterrorism Preparedness and Response Act of 2002 (Public Law 107-188, Title IV – Drinking Water Security and Safety). These documents are considered confidential and are exempt from disclosure under RCW Section 42.17.310(1)(ww) of the Public Disclosures Act, RCW 42.17.250 et seq. These documents have been prepared, assembled, or are maintained to prevent, mitigate, or respond to criminal terrorist acts. The goals of the City's Emergency Response Plan are as follows:

- Be able to identify an emergency quickly and initiate a timely and effective response plan
- Ensure adequate water storage and supply for fire suppression
- Notify local, state and federal agencies quickly so they can assist in the response if necessary
- Protect public health by quickly being able to determine whether the water is unsafe to drink or use, notify customers of the situation immediately and effectively, and advise them of appropriate protective action
- Quickly respond and repair damages to minimize system down town
- Provide emergency public information concerning customer service

An excerpt of the City's Emergency Response Plan is included in Appendix W-K.

W 9.4.2 Drought Response Plan

The City's Drought Response Plan is heavily tied to coordination with the City of Everett. In the case of a drought, the Spada Reservoir is thoughtfully considered to satisfy these three main goals:

- Adequate quantity of high-quality water is maintained throughout a drought event
- Adequate instream flows are maintained in the Sultan River for fish and wildlife habitat
- Adequate storage for the generation of hydroelectric power

While there is little latitude for the first two goals, the third may be suspended depending on the severity of the drought. In the case of a drought, the following stages drive the approach to curtail water usage:

- **Advisory Stage** – The public is informed that a water shortage may occur and is encouraged to use water wisely
- **Voluntary Stage** – This stage relies on voluntary cooperation to meet reduction goals. During this stage, the City and its purveyors will implement supply-side actions and recommend voluntary actions for their retail customers
- **Mandatory Stage** – During this stage, the City and its purveyors will implement more aggressive supply-side actions and will limit or prohibit certain retail water use activities
- **Emergency Stage** – if supply conditions worsen and the mandatory stage does not meet the required demand reduction, the stage will establish emergency restrictions, which may include rate surcharges

For additional information on these stages and protocols, the Drought Response Plan is included as Appendix W-L.

W 9.4.3 Notification Procedures

City personnel must be immediately notified in an emergency. The public may notify the City by calling the main phone number at City Hall anytime during normal business hours. The water system operations personnel on duty will be contacted.

Between the hours of 5:00 p.m. and 8:00 a.m., emergency calls are directed to (425) 239-0189. This phone number allows for an on-call staff response or for the caller to leave a voice mail message. Response to the City limits is required per policy within 45 minutes of notification of an emergency. In the event of an emergency where additional support beyond the emergency call phone number Table W 9-8 includes the direct lines for water system personnel that can be reached in rank order.

Table W 9-8
Water System Personnel - Emergency Call-Up List

Rank	Job Title	Phone Number
1	O&M Supervisor	(360) 863-4615
2	O&M Division Manager	(360) 863-4546
3	Public Works Director	(360) 863-4502

The City must also be prepared to notify the potentially affected public if an emergency arises. Depending upon the urgency, the affected public may be notified through any one or a combination of methods such as the following:

- Notices mailed with billings.
- Posted notices at publicly visible locations.
- Public notices in newspapers, circulating in the local vicinity.
- Announcements over local radio and television broadcasts.
- Police loudspeaker - roaming system.
- Door-to-Door delivery of announcements and personal contact.
- Posting on City social media pages.
- Posting on the City's website.
- Emergency Telephone Notification provided by Snohomish County Dept. of Emergency Management.

All announcements should inform the public regarding: the situation that has occurred; what intermediate measures must be taken by them (i.e. conservation methods, where to go for water, or what to do with their water prior to consumption); and, when they can expect to see the system return to normal operations.

Public Notification Program

The water-using public must be informed of all events that could jeopardize public health, including water shortages. All individual customers must be informed through regular channels, as described above. Mass media notices must also be prepared and issued as soon as problems become evident. The following program generally outlines the requirements for the City for fulfilling the needs of public awareness.

The City has implemented the Public Notification of Drinking Water Violation, Tier 1-3 in accordance with 40 CFR 141.201 through 208.

The Public notice requirements are divided into three tiers, to take into account the seriousness of the violation or situation and of any potential adverse health effects that may be involved.

Immediate Notice (Tier 1)

Any time a situation occurs where there is the potential for human health to be immediately impacted, water suppliers have 24 hours to notify people who may drink the water of the situation. Water suppliers must use media outlets such as television, radio, and newspapers, post their notice in public places, or personally deliver a notice to their customers in these situations.

Notice as Soon as Possible (Tier 2)

Any time a water system provides water with levels of a contaminant that exceed EPA or state standards or that hasn't been treated properly, but that doesn't pose an immediate risk to human health, the water system must notify its customers as soon as possible, but within 30 days of the violation. Notice may be provided via the media, posting, or through the mail.

Annual Notice (Tier 3)

When water systems violate a drinking water standard that does not have a direct impact on human health (for example, failing to take a required sample on time) the water supplier has up to a year to provide a notice of this situation to its customers. The extra time gives water suppliers the opportunity to consolidate these notices and send them with annual water quality reports (consumer confidence reports).

Media outlets that may be used for public notification are listed in Table W 9-9.

Table W 9-9
Media Outlets – Public Notification

Name	Address	Phone Number	Email
KRKO	2707 Colby Avenue, Suite 1380 Everett, WA 98201	(425) 304-1381	info@northsoundteam.com
KING	363 Mercer Street, Suite #200 Seattle, WA 98109	(206) 691-2981	feedback@king.org
KOMO	Suite 370 140 4th Avenue North Seattle, WA 98109	(206) 404-4000	tips@komonews.com
KIRO	2807 Third Avenue Seattle, WA 98121	(206) 728-7777	newstips@kiro7.com
The Herald	P.O. Box 930 Everett, WA 98206	(425) 339-3000	newstips@heraldnet.com

W 9.4.4 Safety Procedures

The City proactively trains public works personnel assigned to operations duties where these safety procedures are applicable:

- Confined space entry (annually, 21 employees are current).
- Energy control (every three years, 14 employees are current).
- Traffic control (every three years, 20 employees have current flagger cards).
- First aid/CPR (every two years, 31 employees have current cards).
- Competent person/trenching and shoring training (annually, 23 employees are current).

The City has adopted policies for confined space entry, excavations, respiratory protection, and work zone safety.

All City vehicles are equipped with first aid kits and fire extinguishers.

W 9.4.5 Utility Shutoffs for Nonpayment

The City complies with House Bill HB 1329, preventing utility shutoffs for nonpayment during extreme heat. The bill prohibits utilities from involuntarily terminating water service to any residential user during days for which the National Weather Service has issued certain heat-related alerts, requires water utilities to promptly make a reasonable attempt to reconnect service to a dwelling upon receipt of a request to reconnect utility service for a day in which the National Weather Service has issued certain heat-related alerts, and authorizes water utilities, in connection with a request to reconnect service for a day for which a heat alert has been issued, to require the residential user to enter into a payment plan prior to reconnecting service to the dwelling.

W 9.5 Cross-Connection Control

The purpose of the City's Cross Connection Control Program is to protect and maintain the bacteriological and chemical quality of the municipal potable water supply by the elimination and prevention of cross connections between the City potable water distribution system and any potable water piping arrangement that might threaten the quality of the potable water distribution system. The cross-connection control program is included in City Municipal Code Chapter 13.06 Cross-Connection Control.

To track this, surveillance programs for cross connections and sanitary hazards are in place that require the inspection of all new and existing buildings, structures and grounds. The Building Department and the Public Works Department both review plumbing plans as they pertain to new buildings, structures and grounds; however, it is the Water Department that schedules and inspects existing buildings, structures and grounds based on the degree of hazard that those businesses might impose to the municipal water distribution system.

When a cross connection is found the Water Department works together with the customer to fix the problem, giving them information and advice and also a deadline date by which to have the work done. Once the assembly is in place a certified Backflow Assembly Tester (BAT) employed by the City tests the backflow assembly and verifies that the initial installation is correct. When the backflow assembly passes the test, the results are then entered into a computer program maintained by the City's Water Department. Backflow assemblies are tested annually and when their test date is due the following year the Water Department sends a reminder letter to the customer. It is the customer who is responsible to contact a certified BAT to perform the annual test. That BAT then sends in the test results to the City's Water Department where it is then entered into the database.

The City has considered the use of reclaimed water for irrigation in Sky River Park, adjacent to the WWTP. Financial considerations have indicated that this effort would have minimal returns on this investment for water treated to Class A standards. Reclaimed water meeting Class B standards is being considered for further evaluation for use in the City's sanitary sewer flushing program. Additional discussions related to the use of reclaimed water is included in Chapter SS 8 Wastewater Reclamation of the City's Sanitary Sewer Plan.

W 9.6 Sanitary Survey Findings

The City's most recent Sanitary Survey was conducted in 2023 and the next Sanitary Survey is scheduled for 2028. No Significant Deficiencies were found as part of the Sanitary Survey. Significant Findings of the Sanitary Survey include:

- Safety concerns at the North Hill reservoir. Insufficient railing at the top of the reservoir should be addressed.
- The need for inspection of reservoir overflow rubber valve seals.
- The potential for increased security measures at reservoir sites including installation of cameras and hatch intrusion alarms.
- The need for consultation with DOH before switching the Highland intertie from an emergency source to a permanent source.
- Strategy for stabilizing the variable chlorine residuals in the old Sky Hill Zone.

- The inclusion of the updated 2017 Revised Total Coliform Rule in the updated coliform monitoring plan.
- Development of a written DBP monitoring plan.

W 9.7 Recordkeeping, Reporting, and Customer Complaint Program

The Public Works Department receives customer concerns regarding water quality or distribution via telephone, submission through the City website, or e-mail. After receipt and logging of the complaint, a work order is generated and sent to the appropriate party for response.

Complaints are typically addressed based on the severity and nature of the complaint. Public health concerns are addressed immediately, while other less severe concerns are handled in conjunction with the complainant. The City documents the corrective action taken, if any, and the date and time of the complaint. The complaint information is placed into a Compliant Log for future reference. In addition, there is an after-hours emergency number that can be utilized by City's customers. If a customer calls the after-hours number, a representative from the City will answer the call and if needed respond within 45 minutes. A summary of complaints received in 2016 through 2023 is included in Table W 9-10. Figure W 9-2 shows the history of the water system's breaks and leaks and customer complaints since 2015.

Table W 9-10
Summary of Customer Complaints 2016-2023

Description	Number of Complaints	Number Resolved
Low Pressure	1	1
Water System Repair / Maintenance	5	5
Total	**6**	**6**

The City has recently updated its customer complaint receipt and recordkeeping process, and has superseded the process that supported Table W 9-10. The new customer complaint program directs all complaints to a single source where they are logged and redirected to an appropriate party for response. A summary of complaints received under the new customer complaint program from May 2023 to May 2024 is included in Table W 9-11

Table W 9-11
Summary of Customer Complaints Under New System From May 2023-May 2024

Description	Number of Complaints	Number Resolved
Water Pressure	4	4
Leaking / Damaged Meter	4	4
Infrastructure Repair	2	2
Total	**10**	**10**

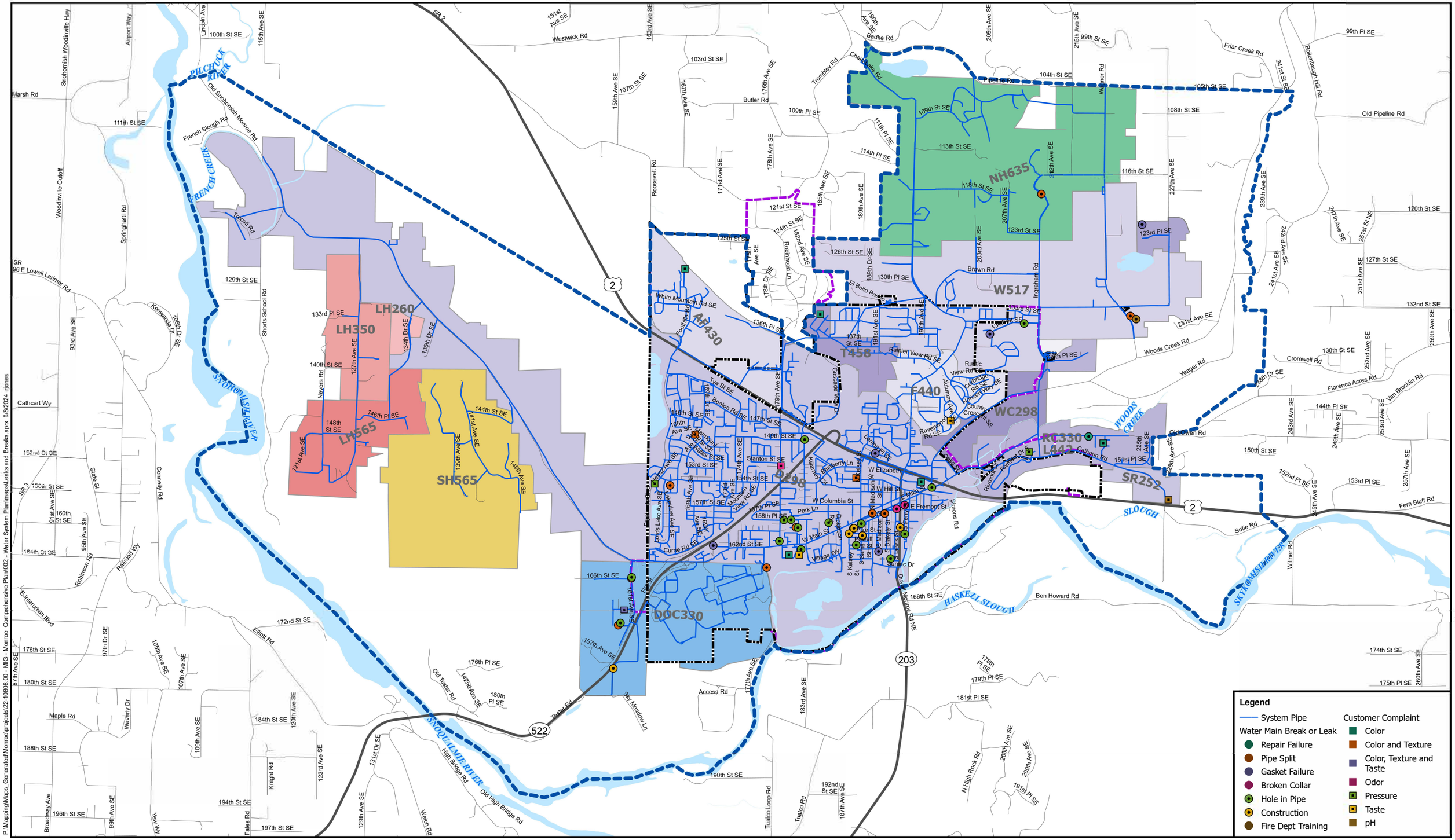

Water System: City of Monroe 2024

Snohomish County base data 2024

Data sources supplied may not reflect current or actual conditions. This map is a geographic representation based on information available. It does not represent survey data. No warranty is made concerning the accuracy, currency, or completeness of data depicted on this map.
BHC Consultants LLC., assumes no responsibility for the validity of any information presented herein, nor any responsibility for the use or misuse of the data.

N

0 0.5 1 2 Miles

Water Main Break, Leak, and Customer Complaint

Utility Systems Plan - Water
City of Monroe, Washington
September 2024

Figure
W 9-2

COPYRIGHT © 2024 BHC CONSULTANTS LLC., ALL RIGHTS RESERVED

P:\Mapping\Maps_Generated\Monroe\projects\22-10808.00 - MIG - Monroe Comprehensive Plan\002 - Water System Plan\maps\Leaks and Breaks apr... 9/8/2024 rjones

THIS PAGE INTENTIONALLY BLANK.

W 9.7.1 Recordkeeping

The City Water System maintains records in accordance with the DOH requirements and per WAC 246-290-480.

The following records are in perpetuity and located and reported to DOH as noted below:

- Bacteriological Samples, Sampling Map Updated as Needed:
  - City Public Works Department reported monthly.
- Chemical Analysis:
  - City Public Works Department reported as required in cooperation with the City of Everett.
- Chlorine Residual Samples:
  - City Public Works Department reported monthly.
- All Water Quality and Water Related Citizen Concerns:
  - City Public Works Department.
- Water System Flushing/Maintenance and Hydrant Maintenance Information:
  - City Public Works Department.
- Fire Hydrant Flow Tests:
  - City Public Works Department.
- Water System Flows:
  - City Public Works Department.
- Water System Construction Completion Reports:
  - City Public Works Department.
- Water Facility Inventory:
  - City Public Works Department updated/reported annually.
- Consumer Confidence Report:
  - City Public Works Department updated/reported annually.
- Water System Improvements/Expansion Drawings And Inspection Reports:
  - City Public Works Department.
- De-chlorination Reports:
  - City Public Works Department.
- City Water System Annual Report:
  - City Public Works Department, updated/reported annually to City of Everett.

W 9.7.2 Reporting

Reporting the results of all tests, measurements, and analyses to DOH on a regular basis is required by the rules and regulations (WAC 246-290). Separate reporting is not required where analytical tests are performed by the State Public Health Laboratory or by a private laboratory that is certified by DOH and those results are reported directly. Following is an outline of all reporting that is required.

Results of all tests and analyses must be reported to DOH within 40 days. As indicated, duplicate reporting is not required where the analysis is made by the State Laboratory or one that is certified by DOH. Failure of compliance with any of the established maximum containment levels or failure to comply with the monitoring schedule shall be reported to DOH within 48 hours.

Annually, a water facilities inventory and report shall be submitted to DOH no later than July 1. This report shall consist of a summarization of the previous year's operation and shall contain as a minimum the following information:

- Summarize the services of the system.
- Total number of services.
- Number of metered services.
- Summarize the water production.
- Average daily demand for the year.
- Peak daily demand.
- Outline the range of distribution system pressures within the various pressure levels.
- Include a brief narrative summary of the operation of the major features of the system.
- Outline major system additions or changes made during the year.
- Summarize the water quality information determined during the year.

W 9.8 Summary of O&M Deficiencies

Operations and Maintenance (O&M) improvements identified below are planned and will be budgeted in the O&M section of the water utility budget.

- Water system mapping updates in GIS (ongoing).
- Water system maintenance software and records management system (ongoing).
- Leak Detection Program (ongoing).
- Automated mixing and/or sodium hypochlorite dosing equipment at both Spring Hill reservoirs.

W 9.9 Staffing

The City water system currently operates with approximately 12.26 full time employees (FTE). Based on current staffing levels, the City expects to need additional FTEs to both meet operations and maintenance level of service goals with the projected growth in system connections. Based on the 2023 AWWA Utility

Benchmarking: Performance Management for Water and Wastewater report[1], water systems range from a 25th percentile of 375 customer accounts per FTE to a 75th percentile of 582 customer accounts per FTE with a median value of 452 customer accounts per FTE. for water utilities. Based on the AWWA report and the 2023 system customer accounts of 7,940, the water system is expected to operate with approximately 13.5 to 21 FTEs, with a median value of 17.5 FTEs. The City's water system has a relatively large service area for the number of connections served, particularly after the consolidation with Sky Meadows in 2014. Additionally, City operations staff have noted a need for additional staff to adequately operate and maintain the water system. For these reasons and the efficient current staffing of the water system, the City should evaluate options to increase water system staffing by three FTEs over the next three years to operate and maintain the water system to the necessary level of service as the system customer base grows.

[1] American Water Works Association (AWWA). (2023). *AWWA Utility Benchmarking: Performance Management for Water and Wastewater.* Denver, CO: American Water Works Association.

THIS PAGE INTENTIONALLY BLANK.

Chapter W 10 Distribution Facilities Design and Construction Standards

W 10.1 Project Review Procedures

Water system projects are reviewed by the City Public Works Department. The City has the authority, processes, and human resources in place to ensure the project report and construction documents meet minimum regulatory and industry standards, and the project end result satisfies the water system's goals and long-term interests. To this end, the City satisfies the requirements of WAC 246-290-100(5) for document submittal exception.

W 10.2 Policies and Requirements for Outside Parties

All water projects, whether internal or proposed by outside parties, are required to comply with the level of service standards in Chapter W 6 – System Analysis and Asset Management and the design and construction standards discussed here.

W 10.3 Construction and Design Standards

All water system improvements are constructed in accordance with the City's Municipal Code Chapters 13.04 and 13.16 applicable American Water Works Association (AWWA) specifications[1], Section 7-08 through 7-15 of the WSDOT/APWA Standard Specifications[2], and the City of Monroe Public Works Design, Construction and Operation Standards. A copy of the current City Public Works Design, Construction and Operation Standards is included in Appendix CE-1. These standards include construction and design standards for water mains such as pipe material and pipe class, disinfection, testing, drawings standards, appurtenances, and special conditions.

These requirements are intended to meet or exceed the construction standards referenced in WAC 246-290. This material is intended to meet the requirements of the Washington State Department of Health (DOH) Submittal Exception Process for water main projects and following the approved procedures and standards, the City is provided a waiver from the requirement of the DOH approval of individual distribution system water main projects.

W 10.4 Construction Certification

All water system improvements constructed within the City's Water Service Area for which the City will assume responsibility are inspected by the Public Works Department's Utilities Inspector and overseen by a professional engineer licensed in the State of Washington in accordance with the City's Municipal Code Chapters 13.04 and 13.16, applicable American Water Works Association (AWWA) specifications, Section 7-08 through 7-15 of the WSDOT/APWA Standard Specifications, and the City of Monroe Public Works Design, Construction and Operations Standards (Appendices CE-1). All flushing and hydrostatic pressure test operations are witnessed by the City. Water quality samples are taken by City employees and tested at the City's accredited laboratory.

[1] AWWA. (various dates). *American Water Works Association Standards.* Denver, CO: AWWA.

[2] Washington DOT, APWA. (2023). *Standard Specifications for Road, Bridge, and Municipal Construction.* Olympia: Washington State Department of Transportation.

The inspector annotates construction plans as construction progresses. At the completion of construction record drawings are prepared using the marked-up plans and are field verified. Project records are retained in accordance with State of Washington Archives and Records Management Division Guidelines. After completion of construction and acceptance of the improvement a Construction Report for Public Water System Projects is completed per WAC 246-290-040.

Chapter W 11 Capital Improvement Program

W 11.1 Capital Improvement Plan Project Prioritization

The projected population growth and water system demand increases presented in Chapter W 5 – Basic Planning Data, the system capacity analysis included in Chapter W 6 – System Analysis and Asset Management as well as the priority replacement of obsolescent piping, and the pipe breaks, leaks and customer complaints information included in Chapter W 9 – Operations and Maintenance Program are used to asses the need for Capital Improvement Program (CIP) projects and to prioritize these projects. The City is consistent in proactively updating the 6-year CIP annually. This Chapter considers the currently planned 6-year CIP and supplements this CIP years seven through 15 for plan approval and then extends the CIP to consider years 16 through 20. This plan satisfies the requirements of WAC 246-290-100(4)(i) by prioritizing the City's expenditure of financial capital and workforce needs. A State Environmental Policy Act (SEPA) checklist for the City's water system is included as Appendix W-N.

The projects outlined in the CIP are categorized by the following:

- Capacity – project will resolve a deficiency that will result in adequate fire flow or lower velocity in piping for PHD. System deficiencies are discussed and mapped in Chapter W 6 – System Analysis and Asset Management.
- Priority Replacement – The priority replacement piping for the City is comprised of system piping that is nearing the end of its useful life. A map of these pipes is included as Figure W 6-5 of Chapter W 6 – System Analysis and Asset Management.
- Maintenance – project will replace or maintain equipment / assets or will make maintaining assets more economical for the City.

The City is currently working on updating the Geographic Information System (GIS) data for the water system, CIPs and deficiencies are planned be reassessed when the water system's GIS is updated to verify that the system deficiencies are still valid. This GIS update will also support the City's asset management planning and thereby support annual planning efforts and the City's replacement and maintenance program.

W 11.2 Capital Improvement Program Summary and Schedule

The CIP for the first six years of this plan are included in Table W 11-1; year seven through 15 are included in Table W 11-2; and years 16 through 20 are included in Table W 11-3. The CIPs are mapped, as applicable, in Figure W 11-1. Appendix W-M includes individual project sheets for the CIPs in the distribution system to show the extent of the project and identify supporting information for the project.

The City is managing their CIP with a series of supporting programs:

- Priority Replacement Program – This program monitors obsolescent piping in the system with careful attention to customer complaints and pipe breaks and leaks to prioritize pipe replacement. This program focuses on asbestos cement distribution mains that are less than 8-inch in diameter. Projects from this program are considered with upcoming construction for other utilities and the availability of funding and staff resources to complete on an annual basis as part of the annual 6-year CIP process.

- Priority Equipment Replacement and Maintenance Program – This program tracks the City's equipment and assets to maintain valve rebuilds, pump services, tank replacements, tank repainting, replacement of 4-inch servicing for fire hydrants, and facility upgrades. Projects from this program are considered with recognized future needs on an annual basis as part of the annual 6-year CIP planning process.

Table W 11-1
CIP Opinion of Probable Costs: Years 1-6 (2025-2030)

CIP Name	Project Description	Capacity	Priority Replacement	Maintenance	Total Project Cost	Project Year
W-D-01	Replace 6-inch AC - 141st		þ		$ 2,090,000	2025-2026
W-D-03	Trombley Hill from Reservoir to Airport/179th SE		þ	þ	$ 4,300,000	2025-2026
W-D-04	Wilson Lane	þ	þ		$ 150,000	2025-2026
W-D-05	Replace Local Piping at Trombley Tank Campus	þ		þ	$ 80,000	2025
W-D-06	Circle Drive to Sumac	þ	þ		$ 150,000	2025
W-D-07	Replace AC 171st-173rd-161st		þ		$ 210,000	2025
W-D-08	AC Pipe Replacement ($100,000/yr) - Lewis Street East Side McDougall to Lewis Park	þ	þ		$ 200,000	2025-2026
W-D-09	Install 8 inch along 127th	þ			$ 240,000	2025-2026
W-D-10	Ingraham 12 inch CI Replacement PH 3			þ	$ 3,390,000	2025-2026
W-D-11	Short Columbia	þ	þ		$ 320,000	2025-2026
W-D-12	Alley Between Madison and Sams/McDougall and Pike	þ	þ		$ 330,000	2025-2026
W-D-13	Alley Parallel to Main Street at Ferry to North Blakeley east to North Madison	þ	þ		$ 700,000	2026-2027
W-D-14	Alley Parallel to Lewis and Blakeley Freemont to McDougall	þ	þ		$ 290,000	2026-2027
W-D-16	Replace 6 inch along Old Owen Road		þ		$ 610,000	2026-2027
W-D-17	Woods Creek Road - Tjerne to Ingraham Road			þ	$ 2,430,000	2027-2028
W-D-18	Orr to Kelsey Abandon Line Under Houses	þ	þ	þ	$ 130,000	2028-2029
W-D-20	North Hill 116th SE and 227th SE; connect to Wagner 517	þ			$ 3,020,000	2028-2029

CIP Name	Project Description	Capacity	Priority Replacement	Maintenance	Total Project Cost	Project Year
W-D-21	Easton Cove to Graden Water Loop	þ			$ 420,000	2028-2029
W-E-01	Inline Valving			þ	$ 180,000	2025
W-E-02	Public Works Shop Generator Replacement (50/50 412/421)			þ	$ 490,000	2027
W-E-03	Tester Road PS - Equipment Replacement			þ	$ 2,150,000	2027
W-E-04	Spring Hill PS - Equipment Replacement			þ	$ 1,950,000	2028
W-E-05	Lord Hill PS - Equipment Replacement			þ	$ 2,170,000	2028
W-E-06	Trombley Hill PS Controls/Automation/Valving Improvements			þ	$ 210,000	2030
W-E-07	Replace 4 inch servicing FH ($50,000/yr)			þ	$ 310,000	2026-2030
W-E-08	Lord Hill Reservoir Replacement			þ	$ 900,000	2030
W-E-09	Spring Hill Reservoir Replacement			þ	$ 570,000	2030
Sum		**þ**	**þ**	**þ**	**$ 30,900,000**	**2025-2030**

Table W 11-2
CIP Opinion of Probable Costs: Years 7-15 (2031-2039)

CIP Name	Project Description	Capacity	Priority Replacement	Maintenance	Total Project Cost	Project Year
W-D-23	1467th Street SE Replacement	☑			$ 2,500,000	2025-2026
W-D-24	Replacement to the Southeast of the Fairgrounds PRV Station	☑			$ 680,000	2025-2026
W-D-26	Salem Woods Elementary School Replacement	☑			$ 4,670,000	2025-2026
W-D-28	West Main Street Improvements to Supply Commercial Fire Flow	☑	☑		$ 1,250,000	2025
W-D-29	E Main Street and Railroad Avenue replacement	☑	☑		$ 1,640,000	2025
W-D-30	Village Way and West Main Street Replacement	☑			$ 1,990,000	2025
W-D-32	West Main and 179th Avenue SE Replacement	☑			$ 200,000	2025-2026
W-D-33	Tjerne Pl SE replacement	☑			$ 490,000	2025-2026
W-D-35	Old Snohomish Monroe Improvement	☑			$ 4,330,000	2025-2026
W-D-40	Priority Replacement Program	☑	☑		$ 18,600,000	2031-2039
W-E-10	Priority Equipment Replacement and Maintenance Program			☑	$ 15,570,000	2031-2039
Sum		☑	☑	☑	**$ 51,920,000**	**2031-2039**

Table W 11-3
CIP Opinion of Probable Costs: Years 16-20(2040-2044)

CIP Name	Project Description	Capacity	Priority Replacement	Maintenance	Total Project Cost	Project Year
W-D-50	Priority Replacement Program	☑	☑		$ 23,810,000	2040-2044
W-E-20	Priority Equipment Replacement and Maintenance Program			☑	$ 10,200,000	2040-2044
Sum		☑	☑	☑	$ 34,010,000	**2040-2044**

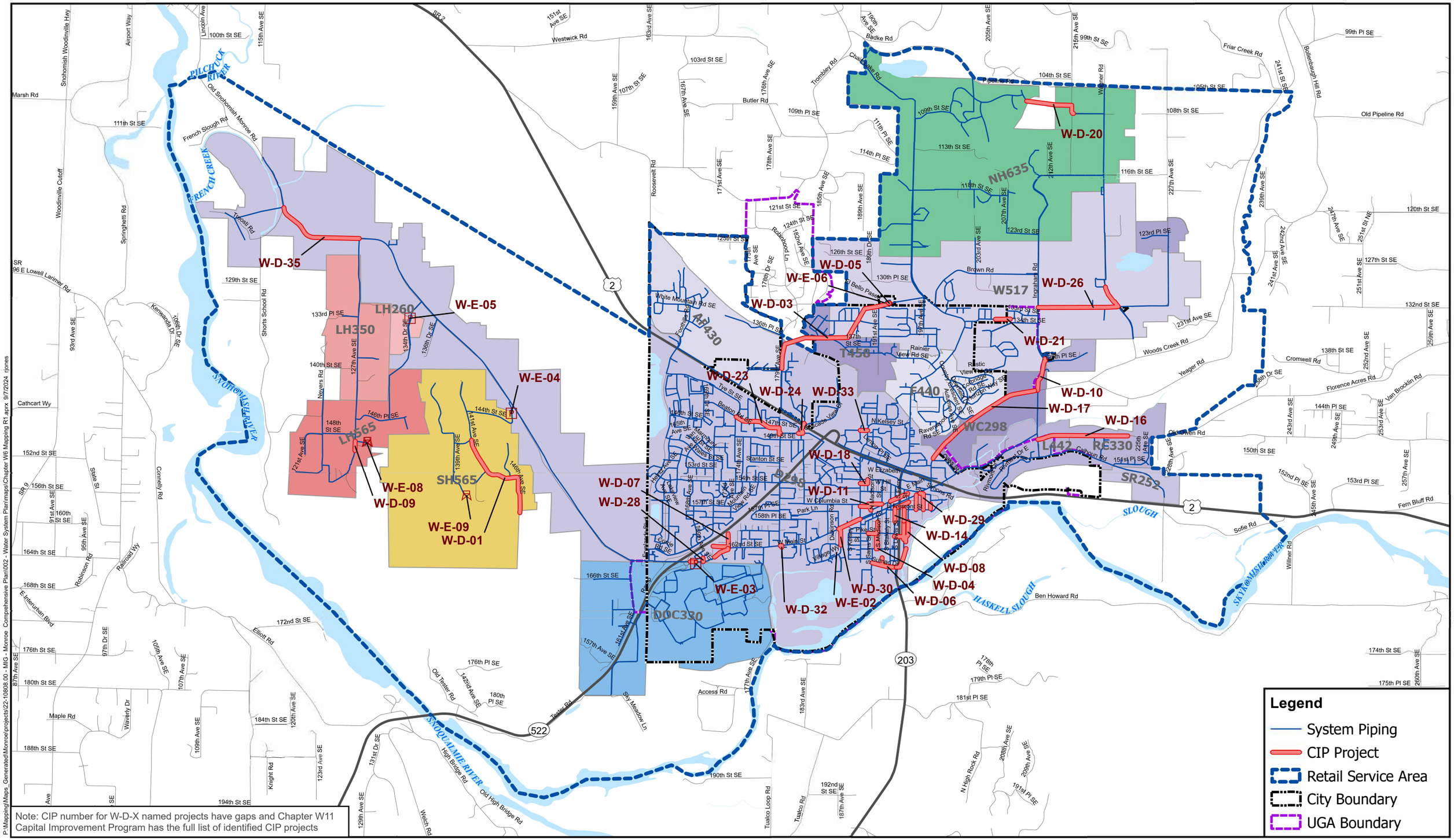

Note: CIP number for W-D-X named projects have gaps and Chapter W11 Capital Improvement Program has the full list of identified CIP projects

P:\Mapping\Maps_Generated\Monroe\projects\22-10808.00 - MIG - Monroe Comprehensive Plan\002 - Water System Plan\maps\Chapter W6 Mapping R1.aprx 9/7/2024 rjones

Water System: City of Monroe 2024

Snohomish County base data 2024

Data sources supplied may not reflect current or actual conditions. This map is a geographic representation based on information available. It does not represent survey data. No warranty is made concerning the accuracy, currency, or completeness of data depicted on this map.
BHC Consultants LLC., assumes no responsibility for the validity of any information presented herein, nor any responsibility for the use or misuse of the data.

N

0 0.5 1 2 Miles

Capital Improvement Program

Utility Systems Plan - Water
City of Monroe, Washington
September 2024

Figure
W 11-1

COPYRIGHT © 2024 BHC CONSULTANTS LLC., ALL RIGHTS RESERVED

THIS PAGE INTENTIONALLY BLANK.

Chapter W 12 Water System Financial Plan

W 12.1 Introduction

This chapter was prepared by FCS GROUP to provide a financial program that allows the City water utility to fund the utility's fixed costs, variable costs, and capital projects during the planning period. This financial viability analysis considers the historical financial condition, current and identified future financial and policy obligations, operation and maintenance (O&M) needs, and the financial impacts of the capital projects identified in this Water System Plan (WSP). Furthermore, this chapter provides a review of the water utility's current rate structure with respect to rate adequacy and customer affordability.

The rate recommendations outlined in this chapter are intended to capture the current fiscal position of the utility, and to detail the future fiscal needs if no further financial analysis were to be completed. In 2026, the City intends to undergo a more thorough utility rate analysis including an evaluation of customer classes, the basis for rates and charges, as well as capital connection charges. The analysis will evaluate capital improvement plan expenditures to ensure they are achievable within proposed timeframes and plan for issuance of debt that is aligned with policy obligations.

The City approved Resolution 022-2019 adopting a 6-year rate model in November 2019. The final year of the adopted 6-year rate model is 2025, which includes a planned rate increase for stormwater of 10% and drinking water of 3%. The sewer utility has no planned increase.

In 2026, the City will consider an inflationary increase of 3.8% for stormwater, water, and sewer utilities. This increase is designed to bridge the gap between the end of the 6-year rate model in 2025, and the completion of the more detailed rate analysis in 2026 for implementation in 2027.

W 12.2 Past Financial Performance

This section includes a historical summary of financial performance as reported by the City, including fund resources and uses arising from cash transactions.

W 12.2.1 Comparative Financial Statements

The City legally owns and operates a water utility. The City's utility operates on a cash basis. Therefore, annual balance sheets and income statements are not prepared. Table W 12-1 shows a summary of water fund resources and uses arising from cash transactions for the previous 6 years (2018 through 2023). Noteworthy findings and trends for the historical performance and condition of the City's water utility are then discussed.

Table W 12-1
Summary of Historical Fund Resources and Uses Arising from Cash Transactions

Description	2018	2019	2020	2021	2022	2023
Beginning Cash and Investments	$ 8,271,668	$ 9,129,506	$ 8,425,523	$ 8,915,169	$ 7,162,461	$ 8,133,316
Net Adjustments	-	-	-	-	-	-
Revenues						
Taxes	$ -	$ -	$ -	$ -	$ -	$ -
Licenses and Permits	-	-	-	-	-	-
Intergovernmental Revenues	-	-	-	-	-	-
Charges for Goods and Services	6,488,889	6,986,228	6,744,139	7,480,595	7,593,762	8,166,953
Fines and Penalties	-	-	-	-	-	-
Miscellaneous Revenues	1,109,414	1,138,468	759,680	702,692	445,189	904,054
Total Revenues	**$ 7,598,303**	**$ 8,124,696**	**$ 7,503,819**	**$ 8,183,287**	**$ 8,038,951**	**$ 9,071,007**
Expenditures						
General Government	$ -	$ -	$ -	$ -	$ -	$ -
Public Safety	17,503	20,044	15,900	22,699	18,610	9,158
Utilities	4,868,506	5,159,534	5,477,217	5,766,346	5,723,681	6,433,577
Transportation	-	-	-	-	-	-
Natural / Economic Environment	-	-	-	-	-	-
Social Services	-	-	-	-	-	-
Culture and Recreation	-	-	-	-	-	-
Total Expenditures	**$ 4,886,009**	**$ 5,179,578**	**$ 5,493,117**	**$ 5,789,045**	**$ 5,742,291**	**$ 6,442,735**
Excess (Deficiency) Revenues over Expenditures	**$ 2,712,294**	**$ 2,945,118**	**$ 2,010,702**	**$ 2,394,242**	**$ 2,296,660**	**$ 2,628,272**
Other Increases in Fund Resources						
Debt Proceeds	$ -	$ -	$ -	$ -	$ -	$ -
Transfers-In	-	-	830	-	-	-
Special or Extraordinary Items	-	-	-	-	-	-
Custodial Activities	-	-	-	-	-	-
Other Resources	-	-	-	-	47,162	798
Total Other Increases in Fund Resources	**$ -**	**$ -**	**$ 830**	**$ -**	**$ 47,162**	**$ 798**
Other Decreases in Fund Resources						
Capital Expenditures	$ 1,149,001	$ 2,949,474	$ 767,741	$ 3,394,546	$ 734,787	$ 806,582
Debt Service	697,611	694,817	754,144	752,401	637,424	568,121
Transfers-Out	7,845	4,813	-	-	-	-
Special or Extraordinary Items	-	-	-	-	-	-
Custodial Activities	-	-	-	-	-	-
Other Uses	-	-	-	-	758	-
Total Other Decreases in Fund Resources	**$ 1,854,457**	**$ 3,649,104**	**$ 1,521,885**	**$ 4,146,947**	**$ 1,372,969**	**$ 1,374,703**
Increase (Decrease) in Cash and Investments	**$ 857,837**	**$ (703,986)**	**$ 489,647**	**$ (1,752,705)**	**$ 970,853**	**$ 1,254,367**
Ending Cash and Investments						
Nonspendable	$ -	$ -	$ -	$ -	$ -	$ -
Restricted / Reserved	707,639	685,987	696,680	700,955	479,594	489,498
Committed	-	-	-	-	-	-
Assigned / Unreserved	8,421,867	7,739,536	8,218,489	6,461,506	7,653,722	8,898,183
Unassigned	-	-	-	-	-	-
Total Ending Cash and Investments	**$ 9,129,506**	**$ 8,425,523**	**$ 8,915,169**	**$ 7,162,461**	**$ 8,133,316**	**$ 9,387,681**
O&M Coverage Ratio	155.51%	156.86%	136.60%	141.36%	140.00%	140.79%
Net Operating Income as a % of Operating Revenue	35.70%	36.25%	26.80%	29.26%	28.57%	28.97%
Debt Service Coverage Ratio	3.89	4.24	2.67	3.18	3.60	4.63

Findings and Trends

- The City's water charges for services and miscellaneous revenues increased from $7.6 million (M) in 2018 to $9.1M in 2023. The average compounding annual increase was 3.6 percent per year, with a total increase of 19.4 percent from 2018 to 2023. Operating expenditures increased from $4.9M in 2018 to $6.4M in 2023. The average compounding annual increase was 5.7 percent per year, with a total increase of 31.9 percent. Due to a greater rate of increase in expenditures, compared to total revenues, net income (revenues less expenditures) decreased from $2.7M in 2018 to $2.6M in 2023.
- The O&M coverage ratio (total operating revenues divided by total operating expenses) was 155.5 percent in 2018. Due to the greater rate of increase in expenditures, this ratio decreased to 140.8 percent in 2023. A ratio of 100 percent or greater shows that operating revenue will successfully cover operating expenses, and the utility has remained above this ratio for the past 6 years.
- Net operating income as a percentage of operating revenue was 35.7 percent in 2018. This metric decreased to 26.8 percent in 2020 and maintained at approximately the same rate through 2023 ending at 29.0 percent. Similar to the O&M coverage ratio, these trends help to show how successfully operating revenue actually covered operating expenses, with higher positive numbers being the best and negative numbers showing the need for improvement. In addition, these trends demonstrate the ability of the utility to invest in capital, whether through direct cash transfers or the issuance and servicing of debt.
- The debt service coverage ratio measures the amount of cash flow available to meet principal and interest payments. Typically, revenue bond debt service coverage requires a minimum factor of 1.25 during the life of the loans. This ratio is calculated by dividing cash or net operating income (operating revenues less operating expenses) by annual revenue bond debt service. The City's annual reports did not separate the debt service between revenue bond debt and junior lien debt; therefore, the coverage ratios were calculated on total debt, which is a more conservative comparison. The total debt service coverage ratio for all outstanding debt ended 2018 at 3.9, decreased to 2.7 in 2020 as total revenues declined before rebuilding to 4.6 in 2023. The fact that this ratio has sustained levels higher than the minimum target of 1.25 indicates a stable capacity for new debt and will likely result in favorable terms when entering the bond market.

W 12.3 Financial Plan

The water utility is responsible for generating sufficient revenue to meet all of its costs. The primary source of funding is derived from ongoing monthly service charges, with additional revenue coming from late penalties and interest earnings. The City controls the level of user charges and, with City Council approval, can adjust user charges as needed to meet financial objectives.

The financial plan can only confirm financial feasibility if it considers the total system costs of providing water services, both operating and capital. To meet these objectives, the following elements have been completed.

1. Capital Funding Plan: Identifies the total capital improvement plan (CIP) obligations of the planning period. The plan defines a strategy for funding the CIP, including an analysis of available resources from rate revenues, existing reserves, connection charge revenues, debt financing, and any special resources that may be readily available (e.g., grants, developer contributions, etc.). The capital

funding plan impacts the financial plan through the use of debt financing (resulting in annual debt service) and the assumed rate revenue made available for capital funding.

2. Financial Forecast: Identifies future annual non-capital costs associated with the operation, maintenance, and administration of the water system. Included in the financial plan is a reserve analysis that forecasts cash flow and fund balance activity, along with testing for satisfaction of actual or recommended minimum fund balance policies. The financial plan ultimately evaluates the sufficiency of utility revenues in meeting all obligations, including cash uses such as operating expenses, debt service, capital outlays, and reserve contributions, as well as any coverage requirements associated with long-term debt. The plan also identifies the future adjustments required to fully fund all utility obligations in the planning period.

W 12.3.1 Capital Funding Plan

To properly evaluate future capital funding needs, capital costs were escalated by 4.0 percent in 2025 and 2026, 3.5 percent in 2027 and 2028 and 3.0 percent annually thereafter to the year of planned spending. The CIP developed for this WSP identifies $29.2M in escalated project costs over the 6-year planning horizon from 2025-2030, in addition to the 2024 budget of $1.7M. The 20-year period, through 2044, along with the 2024 budget includes $123.5M in total escalated project costs.

A summary of the 6-year and 20-year CIPs are shown in Table W 12-2. As shown, each year has varied capital cost obligations depending on construction schedules and infrastructure planning needs.

Table W 12-2
Budget, 6-Year and 20-Year CIPs

Year	Unescalated $	Escalated $
2024	$ 1,662,140	$ 1,662,140
2025	1,540,000	1,601,600
2026	6,910,000	7,473,856
2027	3,600,000	4,030,042
2028	6,590,000	7,635,418
2029	4,890,000	5,835,707
2030	2,150,000	2,642,776
6-Year Total	**$ 27,342,140**	**$ 30,881,538**
2031 - 2044	59,920,000	92,587,309
20-Year Total	**$ 87,262,140**	**$ 123,468,847**

Table W 12-3 provides more detail for the 6-year CIP.

Table W 12-3
Budget and 6-Year CIP (Escalated $)

Project	2024	2025	2026	2027	2028	2029	2030	Total
Replace 6" AC - 141st		$ 228,800	$ 1,892,800					$ 2,121,600
Trombley Hill from Reservoir to Airport/179th SE		468,000	3,904,576					4,372,576
Wilson Lane		156,000						156,000
S. Taft Lane		83,200						83,200
Circle Dr. to Sumac		145,600						145,600
Replace AC 171st-173rd-161st		31,200	183,872					215,072
AC Pipe Repl. ($100,000/yr) - Lewis Street East Side McDougall to Lewis Park		31,200	173,056					204,256
Install 8" along 127th		41,600	194,688					236,288
Ingraham 12" CI Replacement PH 3		197,600	605,696		1,934,924	763,773		3,501,993
Short Columbia		31,200	292,032					323,232
Alley between Madison and Sams/McDougall and Pike			43,264	291,059				334,323
Alley parallel to Main St at Ferry to N Blakeley east to N Madison			86,528	638,090				724,618
Alley parallel to Lewis and Blakeley Freemont to McDougall			32,448	257,475				289,923
Replace 6" along Old Owen Rd				67,167	556,146			623,313
Woods Creek Road - Tjerne to Ingraham Rd					475,041	2,028,773		2,503,814
Orr to Kelsey abandon line under houses					23,173	119,340		142,512
North Hill 116th SE and 227th SE; connect to Wagner 517; Install PRVs					336,005	2,768,679		3,104,684
Easton Cove to Graden Water loop						83,538	356,467	440,005
Ingraham 12" CI Replacement PH 4 (North Segment)							491,679	491,679
Inline Valving		187,200						187,200
Public Works Shop Generator Replacement (50/50 412/421)				503,755				503,755
Tester Rd PS - Equipment Replacement				2,205,328				2,205,328
Spring Hill PS - Equipment Replacement					2,004,442			2,004,442
Lord Hill PS - Equipment Replacement					2,236,169			2,236,169
Trombley Hill PS Controls/Automation/Valving Improvements							221,256	221,256
Replace 4" servicing FH ($50,000/yr)			64,896	67,167	69,518	71,604	61,460	334,645
Lord Hill Reservoir Replacement							921,898	921,898
Spring Hill Reservoir Replacement							590,015	590,015
								-
2024 Budget - Construction	660,141							660,141
2024 Budget - Capitalized Labor	1,001,999							1,001,999
Total	**$ 1,662,140**	**$ 1,601,600**	**$ 7,473,856**	**$ 4,030,042**	**$ 7,635,418**	**$ 5,835,707**	**$ 2,642,776**	**$30,881,538**

W 12.4 Available Funding Assistance and Financing Resources

W 12.4.1 City Resources

Resources appropriate for funding capital needs include accumulated cash in the capital fund, rate revenues designated for capital spending purposes, developer contributions, and capital-related charges such as system development charges. The first two resources will be discussed in the Fiscal Policies section of the Financial Forecast. Capital-related charges are discussed below.

System Development Charges

A connection charge such as the City's system development charge (SDC) refers to a one-time charge imposed on new customers as a condition of connecting to the water system. The purpose of the SDC is two-fold: 1) to promote equity between new and existing customers; and 2) to provide a source of revenue to fund capital projects necessary for meeting growth. This revenue can only be used to fund utility capital projects or to pay debt service incurred to finance those projects. In the absence of a connection charge, growth-related capital costs would be borne in large part by existing customers. In 2024, the City charged all new customers an SDC of $4,111 per meter capacity equivalent (MCE). MCEs are defined by the American Water Works Association and represent the maximum safe operating flow capacity in gallons per minute, relative to the base meter size. The City should consider updating SDCs in the near future to capture and incorporate the capacity related infrastructure identified in this update to the WSP.

Local Facilities Charges

While a connection charge is the manner in which new customers pay their share of system investment costs, local facilities charge funding is used to pay the costs of local facilities that connect each property to the system's infrastructure. Local facilities funding is often overlooked in rate forecasting because it is funded upfront by either connecting customers and developers, or through an assessment to properties, but never from rates.

A number of mechanisms can be considered toward funding local facilities. One of the following scenarios typically occurs: (a) the utility charges a connection fee based on the cost of the local facilities (under the same authority as the facilities assessment fee); (b) a developer funds an extension of the system to its development and turns those facilities over to the utility (contributed capital); or (c) a local assessment is set up called a Utility Local Improvement District (ULID/LID) or a Local Utility District (LUD), which collects tax revenue from benefited properties.

A local facilities charge (LFC) is a variation of the connection charge. It is a city-imposed charge to recover the cost related to service extension to local properties. Often called a front-footage charge and imposed on the basis of footage of the main "fronting" a particular property, it is usually implemented as a reimbursement mechanism to a city for the cost of a local facility that directly serves a property. It is a form of a connection charge and thus can accumulate up to 10 years of interest. It typically applies in instances when no developer-installed facilities are needed through developer extension due to the prior existence of available mains already serving the developing property.

The developer extension is a requirement that a developer install on-site and sometimes off-site improvements as a condition of extending service. These are in addition to the connection charge required and must be built to City standards. Part of the agreement between the City and the developer planning to

extend service might include a latecomer agreement (also called payback agreements), resulting in a latecomer charge to new connections for the developer extension.

Latecomer charges are a variation of developer extensions, whereby new customers connecting to a developer-installed improvement make a payment to the City based on their share of the developer's cost. The City passes this charge on to the developer who installed the facilities. As part of the developer extension process, this defines the allocation of costs and records latecomer obligations on the title of affected properties. No interest is allowed, and the reimbursement agreement cannot exceed 20 years in duration.

ULID/LID is another mechanism for funding infrastructure that assesses benefited properties based on the special benefit received by the construction of specific facilities. Most often used for local facilities, some ULIDs also recover related general facilities costs. Substantial legal and procedural requirements can make this a relatively expensive process, and there are mechanisms by which a ULID can be rejected.

W 12.4.2 Outside Resources

This section outlines various grant, loan, and bond opportunities available to the City through federal and state agencies to fund the CIP identified in the WSP.

Grants and Low-Cost Loans

Historically, federal and state grant programs were available to local utilities for capital funding assistance. However, these assistance programs have been mostly eliminated, substantially reduced in scope and amount, or replaced by loan programs. Remaining grant programs are generally lightly funded and heavily subscribed. Nonetheless, the benefit of low-interest loans makes the effort of applying worthwhile.
The State of Washington's Department of Commerce maintains a document currently entitled "*Funding Programs for Drinking Water and Wastewater Projects; Updated 3-5-2024*", which contains details on government programs, eligibility requirements, and contact information, should the City wish to inquire about program offerings and eligibility requirements.

Bond Financing

General Obligation Bonds

General obligation (G.O.) bonds are bonds secured by the full faith and credit of the issuing agency, committing all available tax and revenue resources to debt repayment. With this high level of commitment, G.O. bonds have relatively low interest rates and few financial restrictions. However, the authority to issue G.O. bonds is restricted in terms of the amount and use of the funds, as defined by the Washington constitution and statute. Specifically, the amount of debt that can be issued is linked to assessed valuation.

Revised Code of Washington (RCW) 39.36.020 states:

> (2)(a)(ii) Counties, cities, and towns are limited to an indebtedness amount not exceeding one and one half percent of the value of the taxable property in such counties, cities, or towns without the assent of three-fifths of the voters therein voting at an election held for that purpose.
>
> (b) In cases requiring such assent counties, cities, towns, and public hospital districts are limited to a total indebtedness of two and one-half percent of the value of the taxable property therein.

While bonding capacity can limit the availability of G.O. bonds for utility purposes, these can sometimes play a valuable role in project financing. A utility rate savings may be realized through two avenues: the lower interest rate and related bond costs, and the extension of repayment obligation to all tax-paying properties (not just developed properties) through the authorization of an ad valorem property tax levy.

Revenue Bonds

Revenue bonds are commonly used to fund utility capital improvements. The debt is secured by the revenues of the issuing utility. With this limited commitment, revenue bonds typically bear higher interest rates than G.O. bonds and require security conditions related to the maintenance of dedicated reserves (a bond reserve) and financial performance (added bond debt service coverage). The City agrees to satisfy these requirements by resolution as a condition of bond sale.

Revenue bonds can be issued in Washington without a public vote. There is no bonding limit, except perhaps the practical limit of the utility's ability to generate sufficient revenue to repay the debt and provide coverage. In some cases, poor credit might make issuing revenue bonds problematic.

W 12.4.3 Capital Funding Strategy

An ideal capital financing strategy would include the use of grants and low-cost loans when debt issuance is required. However, these resources are very limited and competitive in nature and do not provide a reliable source of funding for planning purposes. It is recommended that the City pursue these funding avenues but assume revenue bond financing to meet the needs which can't be met by available cash resources. The capital financing strategy developed to fund the CIP identified in this WSP assumes the following funding resources:

- Accumulated cash reserves,
- Transfers of excess cash (over minimum balance targets) from the Operating Fund,
- System development charge revenue,
- Interest earned on Capital Fund balances, and
- Revenue bond financing.

The cash resources described above, including SDC revenues, are anticipated to fund 59.5 percent of the 2024 budget and 6-year CIP and 41.0 percent of the 20-year CIP. The remaining funding is assumed to be from new debt obligations of $12.5M in the next 6-year planning period and an additional $60.3M between 2031-2044. Table W 12-4 presents the 6-year and 20-year capital financing strategy.

Table W 12-4
Budget, 6-Year and 20-Year Capital Financing Strategy

Year	CIP (Escalated)	Funding Sources			Total Financial Resources
		SDCs	New Debt	Cash Funding	
2024	$ 1,662,140	$ 300,949		$ 1,361,191	$ 1,662,140
2025	1,601,600	561,202		1,040,398	1,601,600
2026	7,473,856	568,273		6,905,583	7,473,856
2027	4,030,042	575,434	3,454,608	-	4,030,042
2028	7,635,418	582,684	3,545,392	3,507,341	7,635,418
2029	5,835,707	590,026	5,245,681	-	5,835,707
2030	2,642,776	597,460	254,319	1,790,996	2,642,776
6-Year Total	**$ 30,881,538**	**$ 3,776,029**	**$ 12,500,000**	**$ 14,605,509**	**$ 30,881,538**
2031 - 2044	92,587,309	9,199,720	60,300,000	23,087,590	92,587,309
20-Year Total	**$ 123,468,847**	**$ 12,975,748**	**$ 72,800,000**	**$ 37,693,098**	**$ 123,468,847**

W 12.5 Financial Forecast

The financial forecast, or revenue requirement analysis, forecasts the amount of annual revenue that needs to be generated by user rates. The analysis incorporates operating revenues, O&M expenses, debt service payments, rate-funded capital needs, and any other identified revenues or expenses related to operations. The objective of the financial forecast is to evaluate the sufficiency of the current level of rates. In addition to annual operating costs, the revenue needs also include debt covenant requirements and specific fiscal policies and financial goals of the City.

For this analysis, two revenue sufficiency tests have been developed to reflect the financial goals and constraints of the City: cash needs must be met; and debt coverage requirements must be realized. In order to operate successfully with respect to these goals, both tests of revenue sufficiency must be met.

1. Cash Test: The cash flow test identifies all known cash requirements for the City in each year of the planning period. Typically, these include O&M expenses, debt service payments, rate-funded system reinvestment or directly funded capital outlays, and any additions to specified reserve balances. The total annual cash needs of the City are then compared to projected cash revenues using the current rate structure. Any projected revenue shortfalls are identified, and the rate increases necessary to make up the shortfalls are established.
2. Coverage Test: The coverage test is based on a commitment made by the City when issuing revenue bonds and some other forms of long-term debt. For the purposes of this analysis, revenue bond debt is assumed for any needed debt issuance. As a security condition of issuance, the City would be required per covenant to agree that the revenue bond debt would have a higher priority for payment (a senior lien) compared to most other expenditures; the only outlays with a higher lien are O&M expenses. Debt service coverage is expressed as a multiplier of the annual revenue bond debt service payment. For example, a 1.00 coverage factor would imply that no additional cushion is required. A 1.25 coverage factor means revenue must be sufficient to pay O&M expenses, annual revenue bond debt service payments, and an additional 25.0 percent of annual revenue bond debt service payments. The excess cash flow derived from the added coverage, if any, can be used for any purpose, including funding capital projects. Targeting a higher coverage factor can help the City achieve a better credit rating and provide lower interest rates for future debt issues.

W 12.5.1 Current Financial Structure

The City maintains a fund structure and implements financial policies that target management of a financially viable and fiscally responsible water system.

Fiscal Policies

A summary of the key financial policies employed by the City, as well as those recommended and incorporated in the financial program, are discussed below.

Operating Reserve

Operating reserves are designed to provide a liquidity cushion to ensure that adequate cash working capital will be maintained to deal with significant cash balance fluctuations, such as seasonal fluctuations in billings and receipts, unanticipated cash expenses, or lower than expected revenue collections. Like other types of reserves, operating reserves also serve another purpose: they help smooth rate increases over time. Target funding levels for an operating reserve are generally expressed as a certain number of days of O&M expenses, with the minimum requirement varying with the expected revenue volatility. Industry practice for utility operating reserves ranges from 30 days (8.0 percent) to 120 days (33.0 percent) of O&M expenses, with the lower end more appropriate for utilities with stable revenue streams and the higher end more appropriate for utilities with significant seasonal or consumption-based fluctuations. The City's current goal is to maintain a minimum balance in the Operating Fund equal to 45 days of O&M expenses and annual debt service for working capital.

Capital Reserve

A capital contingency reserve is an amount of cash set aside in case of an emergency should a piece of equipment or a portion of the utility's infrastructure fail unexpectedly. The reserve also could be used for other unanticipated capital needs, including capital project cost overruns. Industry practices range from maintaining a balance equal to 1.0 to 2.0 percent of fixed assets, an amount equal to a 5-year rolling average of CIP costs, or an amount determined sufficient to fund equipment failure (other than catastrophic failure). The final target level should balance industry practices with the risk level of the City.

This financial plan targets a minimum balance in the water utility capital fund equal to 1.0 percent of fixed assets.

System Reinvestment

System reinvestment funding promotes system integrity through ongoing repair and replacement of system infrastructure. Ideally, a detailed asset management plan would guide the level of rate funded system reinvestment, however, in absence of this level of effort, annual depreciation expense is commonly used as a measure of the decline in asset value associated with routine use of the system. Particularly for utilities that do not already have an explicit system reinvestment policy in place, implementing a funding level based on full depreciation expense could significantly impact rates. An alternative benchmark is annual depreciation expense net of debt principal payments on outstanding debt. This approach recognizes that customers are still paying for certain assets through the debt component of their rate and intends to avoid simultaneously charging customers for an asset and its future replacement. The specific benchmark used to set system reinvestment funding targets is a matter of policy that must balance various objectives, including managing rate impacts, keeping long-term costs down, and promoting "generational equity" (i.e., not excessively burdening current customers with paying for facilities that will serve a larger group of customers in the future).

The City does not currently have a policy in place for system reinvestment funding. No dedicated system reinvestment funding is assumed in this financial plan; however, current practice is to transfer cash above the minimum operating target balance to the capital fund as cash-funded capital. On average, the study assumed an annual transfer of approximately $1.2M per year within the budget and 6-year planning period.

Debt Management

It is prudent to consider policies related to debt management as part of a broader utility financial policy structure. Debt management policies should be evaluated and formalized, including the level of acceptable outstanding debt, debt repayment, bond coverage, and total debt coverage targets. The City has two outstanding water revenue bonds and a municipal bond. The revenue bonds carry a coverage requirement of 1.25.

Because the City intends to continue using revenue bonds as a significant source of capital funding, this financial plan targets coverage at 1.5. Targeting a higher than required coverage factor helps the City maintain its credit rating and may provide lower interest rates for future debt issues.

Financial Forecast

The financial forecast is primarily based upon the City's budget through 2024 and takes into consideration other key factors and assumptions needed to develop a complete portrait of the City's annual water utility financial obligations. The following is a list of the key revenue and expense factors and assumptions used to develop the financial forecast.

- Growth – Rate revenue is escalated utilizing a 1.26 percent growth rate developed based on actual historical trends at the City.
- Revenue – The City has two general revenue sources: 1) water service charges (rate revenue); and 2) miscellaneous (non-rate) revenue. In the event of a forecasted annual shortfall, rate revenue can be increased to meet the annual revenue requirement. For the purpose of this financial forecast, rate revenues are forecasted to increase with customer growth. Non-rate revenues are escalated using general cost inflation assumptions or customer growth, with the exception of interest earnings which are calculated based on projected balances and assumed investment rates.
- System Development Charge Revenue – the existing system development charges are applied to the projected new connections to forecast revenue. Connection charges are forecast to generate an average of $539,000 annually from 2024-2030. This equates to an average of 140 new MCEs per year. Connection charge revenue is directed towards annual capital needs.
- Expenses – O&M expense projections are based on the City's budget through 2024 and detailed review of line item expenses with City staff and were forecasted into the future based on the following assumptions:
    - General cost inflation: 4.0 percent in 2025 and 2026 followed by 3.0 percent per year thereafter.
    - Labor cost inflation: 3.0 percent in 2025 and 2026 followed by 5.0 percent per year thereafter.
    - Benefit cost inflation: 10.0 percent per year.
    - Purchased water inflation: 4.0 percent in 2025 and 2025 followed by 3.0 percent per year thereafter.

- Liability insurance inflation: 15.0 percent per year 2025 through 2029 followed by 10.0 percent per year thereafter.
- Taxes: taxes were calculated based on forecasted revenues and prevailing tax rates.

- Existing Debt – The water utility has three outstanding debt issues: two revenue bonds and one Limited Tax General Obligation (LTGO) bond. Total annual existing debt service obligations begin 2024 at $631,000, decreasing to $560,000 by 2030 based on the amortization schedules of the 2017 revenue bonds.
- Future Debt – The capital financial strategy developed for this WSP forecasts the need for $12.5M in new debt proceeds in two separate instances throughout the six-year forecast. The analysis performed assumes all new debt is through revenue bond financing. Annual new debt service obligations are forecasted to begin in 2027 at $617,000 increasing to $1.1 million by 2030.
- Transfers to Capital – As discussed in the system reinvestment section above, operating fund balance above the minimum requirement is assumed to be available to fund capital projects and projected to be transferred to the Capital Fund each year, if needed. In total, the utility is forecast to fund $8.6 million in capital projects from excess operating fund cash within the 6-year forecast period.

Although the financial plan is completed through 2044, the rate strategy focuses on the shorter-term planning period of 2025 through 2030. It is recommended that the City revisit the proposed rates every 3 to 4 years and consider ordinances setting rates for that same period to ensure that the rate projections developed remain adequate and that rate revenues are consistent year over year. Any proposed significant changes should be incorporated into the financial plan and future rates should be adjusted as needed.

Table W 12-5, following, summarizes the annual revenue requirements based on the forecast of revenues, expenditures, fund balances, and fiscal policies.

Table W 12-5
Budget and 6-Year Financial Forecast

Description	2024	2025	2026	2027	2028	2029	2030
Revenues							
Rate Revenues Under Existing Rates	$ 7,902,075	$ 7,993,717	$ 8,086,513	$ 8,180,478	$ 8,275,628	$ 8,371,976	$ 8,469,539
Non-Rate Revenues	183,379	204,706	194,642	198,835	218,336	222,778	239,293
Total Revenues	**$ 8,085,454**	**$ 8,198,423**	**$ 8,281,155**	**$ 8,379,314**	**$ 8,493,964**	**$ 8,594,754**	**$ 8,708,832**
Expenses							
Cash Operating Expenses	$ 6,621,005	$ 6,918,617	$ 7,210,701	$ 7,491,119	$ 7,812,545	$ 8,133,181	$ 8,466,469
Existing Debt Service	630,861	560,502	560,577	560,101	560,423	560,994	559,814
New Debt Service	-	-	-	617,415	617,415	1,102,527	1,102,527
Total Expenses	**$ 7,251,866**	**$ 7,479,119**	**$ 7,771,279**	**$ 8,668,636**	**$ 8,990,383**	**$ 9,796,702**	**$ 10,128,810**
Total Surplus (Deficiency)	**$ 833,588**	**$ 719,303**	**$ 509,877**	**$ (289,322)**	**$ (496,419)**	**$ (1,201,948)**	**$ (1,419,979)**
Annual Rate Adjustment	**0.00%**	**5.30%**	**5.30%**	**5.30%**	**5.30%**	**5.30%**	**5.30%**
Cumulative Annual Rate Adjustment	**0.00%**	**5.30%**	**10.88%**	**16.76%**	**22.95%**	**29.46%**	**36.32%**
Rate Revenues After Rate Increase	$ 7,902,075	$ 8,417,384	$ 8,966,398	$ 9,551,329	$ 10,174,532	$ 10,838,516	$ 11,545,958
Additional Taxes from Rate Increase	-	63,673	132,238	206,025	285,386	370,696	462,355
Net Cash Flow After Rate Increase	**$ 833,588**	**$ 1,079,297**	**$ 1,257,524**	**$ 875,504**	**$ 1,117,099**	**$ 893,895**	**$ 1,194,086**
Coverage After Rate Increases	3.8	5.9	6.4	2.6	3.0	2.1	2.3

The financial forecast indicates that at existing rate levels, revenues are sufficient to cover operating expenses in 2025 and generate a surplus of $719,000 which can be used to partially offset the annual capital program. As expenses outpace growth and the utility takes on additional debt obligations to fund capital infrastructure investments, rates become deficient in 2027 by $289,000, with the deficiency increasing to $1.4M by 2030. In order to resolve the projected deficiency, rates will need to increase by 5.3 percent annually from 2025 through 2030.

City Funds and Reserves

Table W 12-6 shows a summary of the projected Operating Fund and Capital Fund ending balances through 2030 based on the rate forecasts presented above. The Operating Fund is maintained above 45 days of O&M expenses and annual debt service. The Capital Fund balance meets or exceeds the minimum target of 1.0 percent of fixed assets in every year of the forecast period.

Table W 12-6
Ending Cash Balance Summary

Project	2024	2025	2026	2027	2028	2029	2030
Operating Fund	$ 1,562,961	$ 922,083	$ 958,103	$ 1,068,736	$ 1,108,403	$ 1,207,813	$ 1,248,757
Capital Fund	6,833,391	7,649,837	2,118,755	6,471,393	625,520	1,686,835	828,398
Total	**$ 8,396,353**	**$ 8,571,920**	**$ 3,076,858**	**$ 7,540,129**	**$ 1,733,923**	**$ 2,894,648**	**$ 2,077,155**

W 12.6 Current and Projected Rates

W 12.6.1 Current Rates

The City's existing water rate structure is comprised of a monthly fixed charge, which scales by meter size and includes 400 cubic feet of water allowance. In addition to the fixed monthly charge, a volume charge on excess consumption above the allowance is assessed on a per hundred cubic foot (ccf) basis. For services outside city limits, the charges are one hundred fifty percent of the standard in-city rate. The City offers a discounted rate for *Senior Citizen or Disabled* as well as *Low-Income Senior Citizen – Nonprofit Multifamily* customers. Table W 12-7 shows the existing City water system rate schedule.

Table W 12-7
Existing Schedule of Rates

Water Rates	2024 Inside	2024 Outside
Monthly Per Meter (up to 400 cf)		
3/4" x 5/8"	$ 28.07	$ 42.11
1"	37.28	55.92
1.5"	42.87	64.30
2"	52.30	78.46
3"	63.51	95.26
4"	74.42	111.63
6"	307.38	461.08
8"	400.57	600.85
Volume Charge Over 400 cf		
per 100 cf	$ 7.99	$ 11.99
Stand-by Charge for Fire Protection		
3/4"	$ 2.54	$ 3.82
1"	3.39	5.09
1.5"	3.92	5.89
2"	4.78	7.17
3"	5.79	8.68
4"	6.79	10.19
6"	28.07	42.11
8"	36.58	54.87

Note:

1. Low income senior citizen discount: 40% off applicable monthly fees.
2. Low income disabled persons discount: 40% off applicable monthly fees.

W 12.6.2 Projected Rates

The financial forecast indicates that rate increases are needed to satisfy all future financial responsibilities for the water utility. A rate strategy of 5.3 percent annual increases for the study period is recommended to satisfy this forecast deficiency. Table W 12-8 shows the projected rates with increases applied uniformly to the water fixed and volume components for all classes. A more detailed rate study that will analyze the projected increases is planned to be conducted in 2026.

Table W 12-8
Projected Schedule of Rates

Water Rates	Existing 2024	Projected 2025	2026	2027	2028	2029	2030
Monthly Per Meter (up to 400 cf)							
3/4" x 5/8"	$ 28.07	$ 29.56	$ 31.13	$ 32.78	$ 34.52	$ 36.35	$ 38.28
1"	37.28	39.26	41.34	43.53	45.84	48.27	50.83
1.5"	42.87	45.14	47.53	50.05	52.70	55.49	58.43
2"	52.30	55.07	57.99	61.06	64.30	67.71	71.30
3"	63.51	66.88	70.42	74.15	78.08	82.22	86.58
4"	74.42	78.36	82.51	86.88	91.48	96.33	101.44
6"	307.38	323.67	340.82	358.88	377.90	397.93	419.02
8"	400.57	421.80	444.16	467.70	492.49	518.59	546.08
Volume Charge Over 400 cf							
per 100 cf	$ 7.99	$ 8.41	$ 8.86	$ 9.33	$ 9.82	$ 10.34	$ 10.89
Stand-by Charge for Fire Protection							
3/4"	$ 2.54	$ 2.67	$ 2.81	$ 2.96	$ 3.12	$ 3.29	$ 3.46
1"	3.39	3.57	3.76	3.96	4.17	4.39	4.62
1.5"	3.92	4.13	4.35	4.58	4.82	5.08	5.35
2"	4.78	5.03	5.30	5.58	5.88	6.19	6.52
3"	5.79	6.10	6.42	6.76	7.12	7.50	7.90
4"	6.79	7.15	7.53	7.93	8.35	8.79	9.26
6"	28.07	29.56	31.13	32.78	34.52	36.35	38.28
8"	36.58	38.52	40.56	42.71	44.97	47.35	49.86

Note:

1. Low income senior citizen discount: 40% off applicable monthly fees.
2. Low income disabled persons discount: 40% off applicable monthly fees.
3. For services outside the city limits, the charges are 1.5 times the standard in-city rate.

W 12.6.3 Conservation Based Rates

In 2003 the Washington State Legislature passed the Municipal Water Supply Efficiency Requirements Act. The Water Use Efficiency rules went into effect on January 22, 2007 and typically apply to Water System Plans that each jurisdiction is required to develop every six to ten years. The Revised Code of Washington (RCW) outlines the rules of this act, under RCW 70.119.180. In section 4(B), the RCW states that jurisdictions must perform an "evaluation of the feasibility of adopting and implementing water delivery rate structures that encourage water conservation." A city does not need to actually adopt such a rate structure, but is required to consider it, which is what the following discussion represents.

There are a variety of alternatives available to the City to help address and enhance the conservation signal provided by the water utility's rate structure. As discussed in the Current Rates section above, the City's existing monthly fixed charges include an allowance of 400 cubic feet of usage. Excess consumption above the allowance is assessed a charge on a per 100 cubic foot basis. For customers that use below 400 cubic feet monthly there is no incentive to conserve since they pay for the full allowance through the fixed charge. In considering any structure changes, the City needs to take into account not only the policy goal of achieving conservation but also the impact of the structure change on its customers. If the structure change creates a hardship on the rate payers, a phase-in strategy over a multiple year period may be recommended. A preliminary structure change that the City may implement to immediately enhance the conservation signal is to reduce or eliminate the 400 cubic foot allowance while keeping the fixed charges at their current levels. With the City's volume charges for inside City customers of $7.99 per hundred cubic feet in 2024 dollars, assessing the full allowance would add $31.96 for any bill at or above 400 cubic feet. For customers using below 400 cubic feet per month, there would now be an incentive to conserve since they would be paying for every 100 cubic feet of consumption.

W 12.7 Affordability

The Washington State Department of Health and the Department of Commerce Public Works Board use an affordability index to prioritize low-cost loan awards depending on whether rates exceed 2.5 percent of the median household income for the service area. The average median household income for the City was $75,149 between 2018 and 2022, expressed in 2022 dollars, according to the U.S. Census Bureau. The 2022 value is escalated based on the actual rate of inflation in 2023 of 4.31 percent and the 4.0 – 3.0 percent inflation rate used in the financial forecast to project the median household income in future years. Table W 12-9 presents the City's monthly water bill, projected to 2030 and tested against the 2.5 precent monthly affordability threshold.

Table W 12-9
Community Affordability

Year	Inflation	Median HH Income	2.5% Monthly Threshold	Projected Monthly Bill	% of Median HH Income
2022		$ 75,149			
2023	4.31%	78,388			
2024	4.00%	81,523	$ 169.84	$ 52.04	0.77%
2025	4.00%	84,784	176.63	54.79	0.78%
2026	4.00%	88,176	183.70	57.71	0.79%
2027	3.00%	90,821	189.21	60.77	0.80%
2028	3.00%	93,546	194.89	63.98	0.82%
2029	3.00%	96,352	200.73	67.37	0.84%
2030	3.00%	99,243	206.76	70.95	0.86%

Applying the 2.5 percent monthly affordability test, the City's rates are forecasted to remain within the indicated affordability range through 2030.

W 12.8 Conclusion

The results of this analysis indicate that at existing rate levels the utility will be deficient beginning in 2027. To keep pace with expenses and prepare for new debt obligations needed to fund system infrastructure needs an annual increase of 5.3 percent is projected.

It is recommended that the City regularly review and update the key underlying assumptions that compose the multi-year financial plan to ensure that adequate revenues are collected to meet the City's total financial obligations. The City has not conducted a detailed rate analysis since 2015. A more detailed rate study that will analyze and evaluate the City's rates, capital, operating, cash and debt service needs is planned to be conducted in 2026.

THIS PAGE INTENTIONALLY BLANK.

Chapter SS 4 Existing Wastewater Facilities

SS 4.1 Introduction

The wastewater collection system is owned and operated by the City and consists of a network of mains, trunks, force mains, and lift stations that transport collected wastewater to the wastewater treatment plant. Construction of the collection system began in the early 1920's as a combined system but has since expanded as a separated system and today includes approximately 62.3 miles of sewer lines, comprised of 6.5 miles of force main and 55.9 miles of gravity sewer ranging in size from 4-inch to 24-inch Figure SS 4-1 illustrates the City boundary and wastewater treatment plant and other wastewater treatment plant facilities within a 20-mile radius.. The existing sewer system is shown in Figure SS 4-2. These lengths and pipe size ranges are based on data provided in the City's geographic information system (GIS) database of sewer pipes. Conveyance pipe materials vary from older installations consisting of concrete, clay, and vitrified clay pipe to more recent installations primarily of polyvinyl chloride (PVC), high-density polyethylene (HDPE) and ductile iron (DI) pipe materials.

The collection system service area is subdivided into 21 sewer basins as summarized in Section SS 4.2. The sewer system contains 10 lift stations owned and operated by the City, including the Valley View Pump Station, which receives sewage from 11 sewer basins and pumps it directly to the wastewater treatment plant through a 12-inch-diameter force main. Three sewer basins discharge directly to the wastewater treatment plant by gravity.

The City owns, operates, and maintains a secondary wastewater treatment plant (WWTP) implementing a Modified Ludzack-Ettinger (MLE) process. Wastewater is conveyed to the headworks in the WWTP through a 30-inch Ductile Iron (DI) gravity main that collects sewer flow from the entire City. The WWTP consists of headworks structure with mechanical fine screens, an influent lift station, and a mechanical vortex type grit removal system that provides preliminary treatment. The WWTP also consists of primary clarifiers, aeration basins, secondary clarifiers, and ultraviolet (UV) light disinfection. The disinfected WWTP effluent is discharged to the Skykomish River via a 30-inch diameter final effluent pipe. The treatment plant is described in detail in Chapter 7.

SS 4.2 Existing and Planned Basins

A sewer basin is the area from which the collection system drains to a specified discharge point of interest. Delineations of sewer basins are dependent on existing sewer service areas and topography upstream of each discharge point. The City's system is divided into twenty-one basins, located entirely within the urban growth area (UGA). Fourteen of the 21 identified sewer basins currently have sewer service. The City may extend sewer service to the unsewered basins as new development occurs however, as general rule, the City does not proactively extend sewer mains into unserved areas. The City works with developers to bring sewer service to newly developing areas. Sewer basins are illustrated in Figure SS 4-3 and summarized in Table SS 4-1.

Table SS 4-1
Existing Sewer Basins

Basin Name	Basin Area (Acres)
Beaton	662
Cate's	42
Cripple Creek	202
Eastside	334
French Creek	276
Fryelands	557
Gravel Operations	236
Hansen Road	7
Milwaukie Hill	208
Open Space East	167
Reservoir Hill	317
Rivmont North	34
Rivmont South	173
Sawyer	32
South Fryeland	359
State Corrections	299
Upper Woods Creek	188
Valley View North	239
Valley View South	244
West Main	49
Woods Creek	305
Total Area	**4,930**

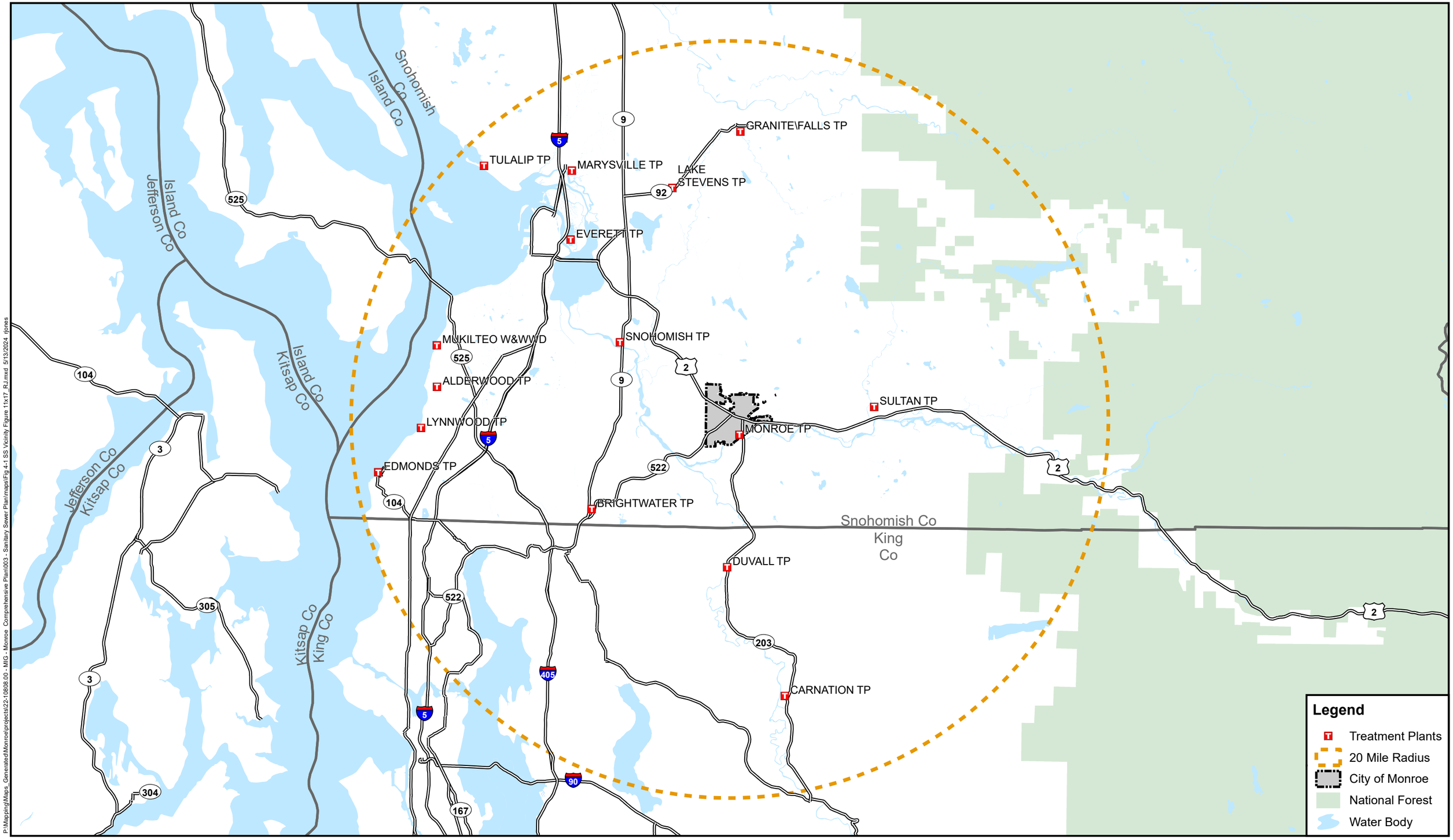

P:\Mapping\Maps_Generated\Monroe\projects\22-10808.00 - MIG - Monroe Comprehensive Plan\003 - Sanitary Sewer Plan\maps\Fig 4-1 SS Vicinity Figure 11x17_RJ.mxd 5/13/2024 rjones

City: City of Monroe 2024

Snohomish County base data 2021

Data sources supplied may not reflect current or actual conditions. This map is a geographic representation based on information available. It does not represent survey data. No warranty is made concerning the accuracy, currency, or completeness of data depicted on this map.
BHC Consultants LLC., assumes no responsibility for the validity of any information presented herein, nor any responsibility for the use or misuse of the data.

N

0 5 10 Miles

Sanitary Sewer Vicinity Map

Utility Systems Plan - Sanitary Sewer
City of Monroe, Washington
September 2024

Figure

SS 4-1

COPYRIGHT © 2024 BHC CONSULTANTS LLC., ALL RIGHTS RESERVED

THIS PAGE INTENTIONALLY BLANK.

Cate's PS
Valley View PS
Beaton PS
Fryelands PS
Sawyer PS
S. Fryelands PS
Old Owen PS
WWTP
Park Place PS
Fox Meadows PS
West Main PS
Compost Facility

Legend

- Pump Station
- Wastewater Treatment Plant
- Manhole
- Force Main
- Sewer Main
- City of Monroe
- UGA Boundary
- Sanitary Sewer Service Area Boundary
- Water Body

City, UGA, and Sewer System: City of Monroe 2024

Snohomish County base data 2021

Data sources supplied may not reflect current or actual conditions. This map is a geographic representation based on information available. It does not represent survey data. No warranty is made concerning the accuracy, currency, or completeness of data depicted on this map.
BHC Consultants LLC., assumes no responsibility for the validity of any information presented herein, nor any responsibility for the use or misuse of the data.

N

0 0.25 0.5 1 Miles

Existing Sanitary Sewer System

Utility Systems Plan - Sanitary Sewer
City of Monroe, Washington
September 2024

Figure
SS 4-2

COPYRIGHT © 2024 BHC CONSULTANTS LLC., ALL RIGHTS RESERVED

P:\MappingMaps_Generated\Monroe\projects\22-10808.00 - MIG - Monroe Comprehensive Plan\003 - Sanitary Sewer Plan\maps\Fig 4-2 Existing Sewer System 11x17_RJ.mxd 5/14/2024 rjones

THIS PAGE INTENTIONALLY BLANK.

P:\Mapping\Maps_Generated\Monroe\projects\22-10808.00 - MIG - Monroe Comprehensive Plan\003 - Sanitary Sewer Plan\maps\Fig 4-3 Existing Sewer Basins 11x17 RJ.mxd 5/14/2024 rjones

FRYELANDS
FRENCH CREEK
CRIPPLE CREEK
CATE'S
RESERVOIR HILL
WOODS CREEK
UPPER WOODS CREEK
BEATON
MILWAUKIE HILL
VALLEY VIEW NORTH
SAWYER
VALLEY VIEW SOUTH
WEST MAIN
OPEN SPACE EAST
EASTSIDE
SOUTH FRYELAND
STATE CORRECTIONS
GRAVEL OPERATIONS
HANSEN ROAD
RIVMONT NORTH
RIVMONT SOUTH
LAKE TYE
SKYKOMISH RIVER
WOODS CREEK
HASKELL SLOUGH
SLOUGH
Butler Rd
Trombley Rd
Roosevelt Rd
Foothills Rd
Old Snohomish Monroe Rd
Chain Lake Rd
Brown Rd
Ingraham Rd
Wagner Rd
Woods Creek Rd
Yeager Rd
Cromwell Rd
Florence Acres Rd
Old Owen Rd
Bollenbaugh Hill Rd
Rainier View Rd SE
Rustic View Rd SE
Country Crescent Dr SE
Corbridge Rd SE
Beaton Rd SE
Tye St SE
Sawyer St SE
Wales St SE
Stanton St SE
Blueberry Ln
North St
W Elizabeth St
W Hill St
E Main St
W Columbia St
Park Ln
W Main St
Simons Rd
Sumac Dr
Pike St
Powell St
Village Wy
Kirby Dr
Oaks St
Rivmont Dr W
Rivmont Dr E
Currie Rd SE
Tester Rd
Old Tester Rd
Sky Meadow Ln
Tualco Rd
N High Rock Rd
Ben Howard Rd
Sofie Rd
Willmer Rd
N Kelsey St
Sunset Dr
Ramp
2
522
203

Legend

- City of Monroe
- UGA Boundary
- Sanitary Sewer Service Area Boundary
- Water Bodies

City, UGA, and Sewer System: City of Monroe 2024

Snohomish County base data 2021

Data sources supplied may not reflect current or actual conditions. This map is a geographic representation based on information available. It does not represent survey data. No warranty is made concerning the accuracy, currency, or completeness of data depicted on this map.
BHC Consultants LLC., assumes no responsibility for the validity of any information presented herein, nor any responsibility for the use or misuse of the data.

N

0 0.25 0.5 1 Miles

Existing Sanitary Sewer Basins

Utility Systems Plan - Sanitary Sewer
City of Monroe, Washington
September 2024

Figure
SS 4-3

COPYRIGHT © 2024 BHC CONSULTANTS LLC., ALL RIGHTS RESERVED

THIS PAGE INTENTIONALLY BLANK.

SS 4.3 Existing Sewer Piping

The City's GIS inventory of gravity sewer lines total 294,986 linear feet of pipe, with sizes up to 24-inches in diameter. The system includes approximately 1,800 manholes, not including County or privately owned manholes. Conveyance pipe materials identified in GIS include clay, concrete, PVC, reinforced concrete pipe (RCP), vitrified clay pipe (VCP), DI, and HDPE.

Due to the relatively flat topography of the City, gravity sewers have generally been constructed at the minimum slope to avoid excessive pipe depths. An inventory of the City-owned gravity sewers is summarized by diameter in Table SS 4-2 and by pipe material in Table SS 4-3.

Table SS 4-2
Existing Gravity Sewers

Pipe Diameter (inches)	Length (feet)	Percent of Total (%)
Less than 4	6,288	2.1%
4	2,124	0.2%
6	10,907	4.4%
8	210,544	72.7%
10	19,806	5.5%
12	23,394	7.8%
15	1,703	0.4%
18	8,174	2.9%
20	551	0.3%
24	11,494	3.7%
Total Gravity Sewers	**294,986 (55.87 miles)**	**100%**

Table SS 4-3
Gravity Sewers Pipe Inventory by Material

Pipe Material	Length (feet)	Percent of Total (%)
Clay	26,187	8.9%
Concrete	4,079	1.4%
DI	2,858	1.0%
HDPE	447	0.2%
PVC	241,931	82.0%
RCP	5,947	2.0%
Miscellaneous	13,536	4.6%
Total	**294,986**	**100%**

The City's inventory of sewer force main (FM) line totals 34,071 feet, ranging in size from 2 inches to 16 inches in diameter. An inventory of the City-owned sewer force main piping is summarized by diameter in Table SS 4-4 and by pipe material in Table SS 4-5.

Table SS 4-4
Existing Force Mains

Pipe Diameter (inches)	Length (feet)	Percent of Total (%)
Less than 2	50	0.1%
2	519	1.5%
4	7,489	22.0%
6	4,748	13.9%
8	8,682	25.5%
12	8,111	23.8%
16	4,472	13.1%
Total Force Mains	**34,071 (6.45 miles)**	**100%**

Table SS 4-5
Force Main Pipe Inventory by Material

Pipe Material	Length (feet)	Percent of Total (%)
DI	21496	63.1%
PVC	11782	34.6%
HDPE	177	0.5%
PE	475	1.4%
Miscellaneous	141	0.4%
Total	**34,071**	**100%**

SS 4.4 Existing Pump Stations

The existing wastewater system includes ten pump stations. In addition, the Evergreen State Fairgrounds, the Washington State Department of Corrections (DOC), and other entities own and operate pump stations that discharge into the City's sewer system. All City-owned pump stations include telemetry monitoring of pump station status and are linked to the supervisory control and data acquisition (SCADA) system at the WWTP. The City has equipped the SCADA system with an auto-dialer that alerts their staff of alarms at any of the pump stations. Table SS 4-6 summarizes the City's pump stations and includes the location, capacity, year constructed, manufacturer, motor information, and on-site power generation. Pump station locations are illustrated in Figure SS 4-2.

Table SS 4-6
Existing Pump Stations

Pump Station	Location	Pump Type	Number of Pumps	Single Pump Capacity (gpm)	Firm Capacity (gpm)	Year Installed
Beaton	17102 147th St SE	Wet Well/Top Mounted	2	580	580	Mid 1980's
Cate's	17562 136th Pl SE	Submersible	2	150	150	Late 1980's
Fox Meadows	17502 160th St SE	Wet Well/Top Mounted	2	125	125	2001
Fryelands	14810 Fryelands Blvd	Wet Well/Top Mounted	2	750	750	1994
Old Owen Rd	Old Owen Rd at Eagle Park Dr	Wet Well/Top Mounted	2	250	250	Late 1980's
Park Place	17866 W Main St	Submersible	3	1,300	1,700	2010
Sawyer	17108 Sawyer St SE	Submersible	2	175	175	1998
South Fryelands	16653 Currie Rd	Wet Well/Dry Well	2	450	450	1996
Valley View	15411 179th Ave SE	Wet Well/Dry Well	3	1,325	1,650	1977
West Main	17097 164th St SE	Submersible	2	115	115	1987

SS 4.5 Wastewater Treatment Plant

The WWTP is located at 522 South Sams Street, Monroe, WA 98272. The WWTP is owned by the City and operated by the City's Public Works Department. The WWTP is operated in accordance with the requirements of the National Pollutant Discharge Elimination System (NPDES) Waste Discharge Permit No. WA0020486 issued on November 18, 2018. The permit expired on November 30, 2023, and the WWTP operates under the conditions of that permit during the permit renewal process, until a new permit is issued. The Draft Waste Discharge Permit No. WA0020486 and Ecology acceptance letter are provided in Appendix SS-A.

The WWTP liquid stream consists of a headworks structure with two mechanical fine screens, an influent lift station and a mechanical vortex type grit removal system. From the headworks wastewater flows by gravity to two primary clarifiers and three aeration basins with anoxic and aerobic zones operating a Modified Ludzak Ettinger (MLE) process. Mixed liquor is then clarified in two circular secondary clarifiers. There are two return activated sludge (RAS) pumps per clarifier that convey sludge collected in the clarifiers back to the aeration basin. Secondary effluent undergoes UV disinfection prior to being discharged to Skykomish River. Primary sludge and secondary waste active sludge collected in the process is pumped to the aerobic digestion process, which operates with three tanks in series to provide partial digestion. Digested sludge is dewatered using a belt filter press and periodically hauled offsite for land application as Class B Biosolids. The WWTP process flow diagram is shown in Figure SS 4-4. Detailed information on each unit process is presented in Chapter 7.

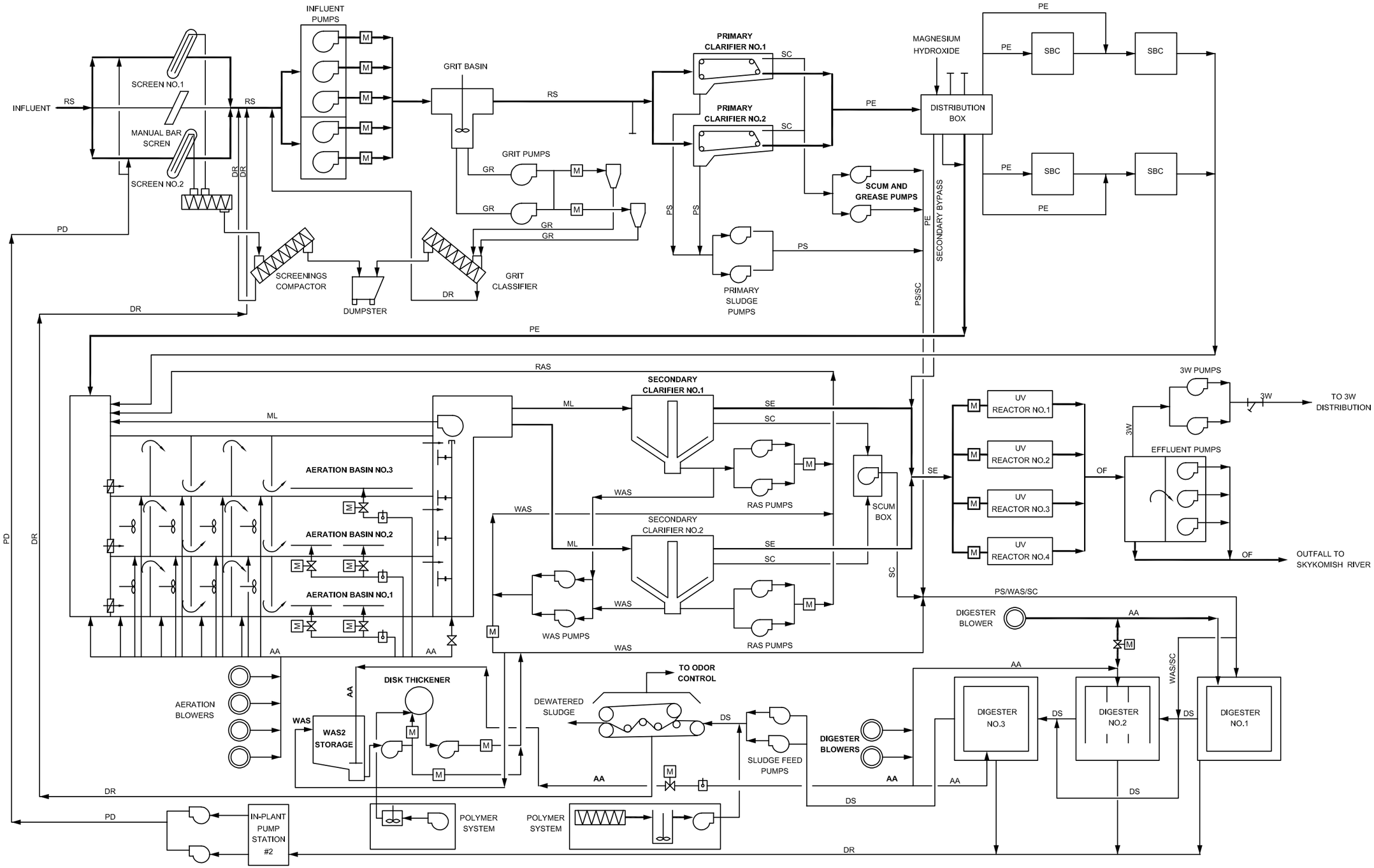

Path: S:\Cad\Monroe\22-10808 Monroe Utility Systems\Report\ Filename: F19-10621_F4-4 Plot date: Jun 26, 2024-04:59:21pm CAD User: RNicolas.
Xref Filename: |

bhc CONSULTANTS

MONROE WASHINGTON

WWTP Process Flow Diagram

Sewer System Plan Update

September 2024

Figure

SS 4-4

COPYRIGHT © 2024 BHC CONSULTANTS, LLC. ALL RIGHTS RESERVED

THIS PAGE INTENTIONALLY BLANK.

Chapter SS 5 Existing and Future Population and Flow Projections

Chapter SS 5 provides a summary of the historical and projected populations for residential, non-residential, and Washington State Department of Corrections (DOC), as well as the historical and projected wastewater flows within the City Urban Growth Area (UGA).

SS 5.1 Population

SS 5.1.1 General

Residential and non-residential population estimates for the City's service area have been developed for each sewer basin for the 2023 through 2044, 2050 and buildout planning horizons. The City's sewer service area includes the City and its Urban Growth Area (UGA). The service area is divided into 19 sewer basins irrespective of existing jurisdictional boundaries, which are shown in Figure SS 4-3.

SS 5.1.2 Current Population

Residential customers, non-residential customers, and the DOC all contribute to sewage in the City. This analysis compiled the best available data for these three populations, using both Puget Sound Regional Council (PSRC) LUV-it model projections and DOC data. The analysis used consistent assumptions across all three to ensure data compatibility and consistency. The methodology used combined various available resources to establish the most accurate population estimates and projections for the purpose of sewer modeling, treatment plant capacity analysis and Capital Improvement Plan (CIP) identification.

The population and employment forecasts used 2023 as the baseline year. PSRC data was used for existing population, employment, and DOC. The PSRC numbers for the DOC are based on the State Corrections sewer basin, which does not closely align with existing DOC inmate data. This may be due to counting some employees within the population estimate, or because PSRC's estimates do not properly account for individual institutions. The PSRC estimates for the DOC are used herein for population forecasting however, since they are consistent with the PSRC projection methodology for the rest of the City and provide a justifiable method for future growth scenario projections. Table SS 5-1 provides a summary of the existing population and forecasted population for the City and its UGA through the planning horizon.

SS 5.1.3 Future Population

Residential, non-residential, and DOC populations were forecasted for the 2023 to 2044, 2050 and buildout planning horizons for each sewer basin. This analysis used PSRC's LUV-it forecast numbers for population for all sewer basins. Since PSRC forecast estimates used five-year increments, the analysis used straight line interpolation to estimate interim years. The PSRC projections are benchmarked to the adopted county allocations. These numbers were compared to Buildable Lands Report data for validation. The populations listed in Table SS 5-1 below represent total City and UGA populations.

Table SS 5-1
Total Population Forecasts for the City of Monroe and UGA

Year	Residential Population	Non-Residential Population	DOC Population[1]
2010[2]	16,315	7,344	2,536
2020	18,903	11,473	2,479
2021	18,911	11,324	2,494
2022	19,110	11,408	2,514
2023	19,309	11,491	2,534
2024	19,508	11,575	2,553
2025	19,858	11,835	2,592
2026	19,905	11,743	2,593
2027	20,104	11,826	2,613
2028	20,303	11,910	2,633
2029	20,502	11,994	2,653
2030	20,790	12,198	2,721
2031	20,900	12,162	2,693
2032	21,099	12,245	2,712
2033	21,298	12,329	2,732
2034	21,497	12,413	2,752
2035	21,749	12,560	2,809
2036	21,895	12,580	2,792
2037	22,094	12,664	2,812
2038	22,292	12,748	2,832
2039	22,491	12,832	2,852
2040	22,693	12,922	2,874
2041	22,889	12,999	2,891
2042	23,088	13,083	2,911
2043	23,287	13,167	2,931
2044	23,455	13,212	2,954
2050	24,596	13,648	3,000
Buildout	28,273	13,648	3,000

Notes:
1) Washington State DOC population (both historic and projected) based on PSRC provided data through 2044. 2050 and buildout projections for DOC population are assumptions.
2) 2010 data as reported in 2015 Utility Systems Plan.

To estimate the proportion of the population that is connected to sewer systems, the analysis first calculated the percentage of parcels served by on-site septic systems within each sewer basin in 2023. It was then assumed that all remaining parcels were connected to sewers. From this, the current proportion of the population with sewer service was derived. Projecting forward, the analysis adopted a linear growth model, assuming a complete transition to sewer systems across the City and UGA over a 50-year period, from 2023 to 2073. For each year within this timeframe, this study forecasted the percentage of the population served by sewer. The analysis obtained the sewered population estimates by then applying these ratios to the total population estimates for each sewer basin from 2023 to 2044 and 2050. This study assumed all nonresidential populations were sewered to establish conservative estimates. Table SS 5-2, below, lists the sewered populations for the City and UGA.

For the residential population buildout scenario, the analysis utilized the proposed land use alternative and projections of buildable lands. To align the PSRC model data with the estimates from the buildable lands dataset, step-down ratios were applied to allocate the total buildout capacity among the basins. These ratios were calculated based on PSRC's estimates, using the average population share of each basin throughout the projected timeframes. This assumes that the relative population sizes across the basins will remain consistent to the average. Then, the City's overall buildable population capacity from the land use alternative and buildable lands dataset was multiplied by these allocation ratios to ascertain the buildout scenarios for each basin. For the employment population buildout scenario, the analysis opted to use the PSRC 2050 estimate rather than using the buildable lands estimates. The PSRC estimates are more conservative and project more employment numbers than the buildable lands buildout estimates. The DOC populations for 2050 and buildout assume a population of 3,000.

Table SS 5-2
Sewered Population Forecasts for the City of Monroe and UGA

Year	Residential Population[1]	Non-Residential Population	DOC Population[2]
2010[3]	16,315	7,344	2,536
2020	14,679	11,473	2,479
2021	14,688	11,324	2,494
2022	14,836	11,408	2,514
2023	14,984	11,491	2,534
2024	15,220	11,575	2,553
2025	15,573	11,835	2,592
2026	15,697	11,743	2,593
2027	15,938	11,826	2,613
2028	16,182	11,910	2,633
2029	16,428	11,994	2,653
2030	16,728	12,198	2,721
2031	16,925	12,162	2,693
2032	17,177	12,245	2,712
2033	17,431	12,329	2,732

Year	Residential Population[1]	Non-Residential Population	DOC Population[2]
2034	17,686	12,413	2,752
2035	17,968	12,560	2,809
2036	18,204	12,580	2,792
2037	18,466	12,664	2,812
2038	18,730	12,748	2,832
2039	18,996	12,832	2,852
2040	19,255	12,922	2,874
2041	19,534	12,999	2,891
2042	19,807	13,083	2,911
2043	20,081	13,167	2,931
2044	20,326	13,212	2,954
2050	22,002	13,648	3,000
Buildout	28,273	13,648	3,000

Notes:
1) Residential population represents the sewered population based on number of sewered parcels. Septic to sewer conversions are assumed to occur at a linear rate from 2023 to 2073 with 100% sewer conversion in 2073.
2) Washington State DOC population (both historic and projected) based on PSRC provided data through 2044. 2050 and buildout projections for DOC population are assumptions.
3) 2010 data as reported in 2015 utility systems plan.

SS 5.2 Existing Wastewater Flows

The City's Wastewater Treatment Plant (WWTP) Discharge Monitoring Reports (DMR) from 2021, 2022, and 2023 and hourly flow data from the WWTP effluent flow meter were used to determine existing wastewater flows in the City. The following is a description of each calculated flow parameter:

- **Average Annual Flow** – This flow condition is defined as the average of daily flows during the year.
- **Maximum Month Flow** – This flow condition is defined as the highest monthly average flow. This flow condition is of particular interest for the WWTP because the National Pollutant Discharge Elimination System (NPDES) permit is written with monthly discharge limitations based on this flow.
- **Maximum Day Flow** – This flow condition is defined as the maximum day flow in a given year.
- **Peak Hour Flow** – This flow condition is defined as the peak sustained flow rate occurring during a one-hour period. It is used to size the collection and interceptor sewers, pump stations, flow meters, and WWTP hydraulic processes.

- **Average Dry Weather Flow** – This flow condition is defined as the average daily flow for a period during the months of July through October when no rainfall was recorded. The intent of presenting this data is to capture the base domestic flow conditions with the minimum impact from infiltration and inflow (I/I).
- **Average Wet Weather Flow** – This flow condition is defined as the average daily flow from the months of November through March. All flows during this period were analyzed regardless of the amount of precipitation. The value of this flow condition is used to determine the I/I contribution to the system.

The average dry weather, average annual, average wet weather, maximum month, and maximum day flows were calculated using the WWTP's DMRs for 2021, 2022, and 2023. The peak hour flow was determined using hourly flow rate data from the peak day during each of the three years. Peak day flows occurred on 1/6/2021, 1/7/2022, and 12/6/2023. Data was provided in one-minute intervals, and the peak hour flows were calculated as the maximum value of a 60-minute rolling average for each of the three days. The historic flows are summarized in Table SS 5-3.

Table SS 5-3
Historic Flows

Year	Average Dry Weather Flow (mgd)	Average Annual Flow (mgd)	Average Wet Weather Flow (mgd)	Maximum Month Flow (mgd)	Maximum Day Flow (mgd)	Peak Hour Flow (mgd)
2021	1.47	1.71	1.96	2.30	3.43	4.05
2022	1.53	1.69	1.85	2.19	3.38	4.60
2023	1.47	1.61	1.76	2.15	3.72	4.50
Average	**1.49**	**1.67**	**1.86**	**2.22**	**3.51**	**4.38**

SS 5.2.1 Sewer Per Capita Flow Rates

Table SS 5-4 summarizes the per capita flow rates developed to provide average annual flow projections. The 2024 per capita flows were calculated by assuming the same 159.4 gallons per capita per day (gpcd) rate for the DOC population, and the same gpcd ratio of residential to non-residential, that were assumed in the 2015 Plan. The residential and non-residential per capita rates were then adjusted to match the measured average annual flow values for 2021, 2022, and 2023. The averages of these values were used as the overall per capita flow value for the residential and non-residential categories. Per capita rates were assumed to be constant throughout the planning period.

Table SS 5-4
Sewer Per Capita Flow Rates

Flow Category	2015 Plan Per Capita Average Annual Sewer Flows (gpcd)	2024 Plan Per Capita Average Annual Sewer Flows (gpcd)
Residential	67.4	55.2
Non-Residential	48.6	39.8[1]
DOC	159.4	159.4[2]

Notes:
1) Ratio of non-residential to residential per capita is assumed to be equal to 2015 plan.
2) Washington State DOC per-capita flow assumed to be equal to 2015 plan value.

SS 5.2.2 Maximum Month, Maximum Day, and Peak Hour Flows

The maximum month, maximum day, and peak hour flows recorded at the City's WWTP from 2021 through 2023 are summarized in Table SS 5-5. Peak hour flows are based on effluent flow measurement values in one-minute intervals taken on the maximum day for each year. The one-minute intervals were converted to peak hour flows using a 60-minute rolling average. It is assumed that the highest peak hour flow in a year occurred on the maximum day.

Table SS 5-5
Maximum Month and Maximum Day Flows

Year	Maximum Month (mgd)	Month	Maximum Day (mgd)	Peak Hour	Day
2021	2.3	January	3.43	4.05	6-Jan-21
2022	2.19	January	3.38	4.60	7-Jan-22
2023	2.15	December	3.72	4.50	6-Dec-23
Average	**2.22**		**3.51**	**4.38**	

SS 5.3 Existing Sewage Peaking Factors

Peaking factors based on historic flow records are used to project future sewage flows. Peaking factors are calculated by taking the various flow events and dividing them by the annual average flow. The peaking factors are summarized in Table SS 5-6.

Table SS 5-6
Peaking Factors

Year	Max Month	Max Day	Peak Hour
2021	1.34	2.00	2.36
2022	1.30	2.00	2.72
2023	1.33	2.31	2.79
Average	**1.32**	**2.10**	**2.62**

The average peaking factors presented in Table SS 5-6 were used for determining future flows. These peaking factors are typical of similar communities.

SS 5.3.1 Diurnal Curve

Typically, domestic sewer flows are lowest overnight and highest during the morning and evening hours. This distribution of flow throughout the day is described by a diurnal curve. Weekday and weekend diurnal curves for the collection system are illustrated in Figure SS 5-1, and were developed from averaging several days of dry weather flow data collected in August 2023.

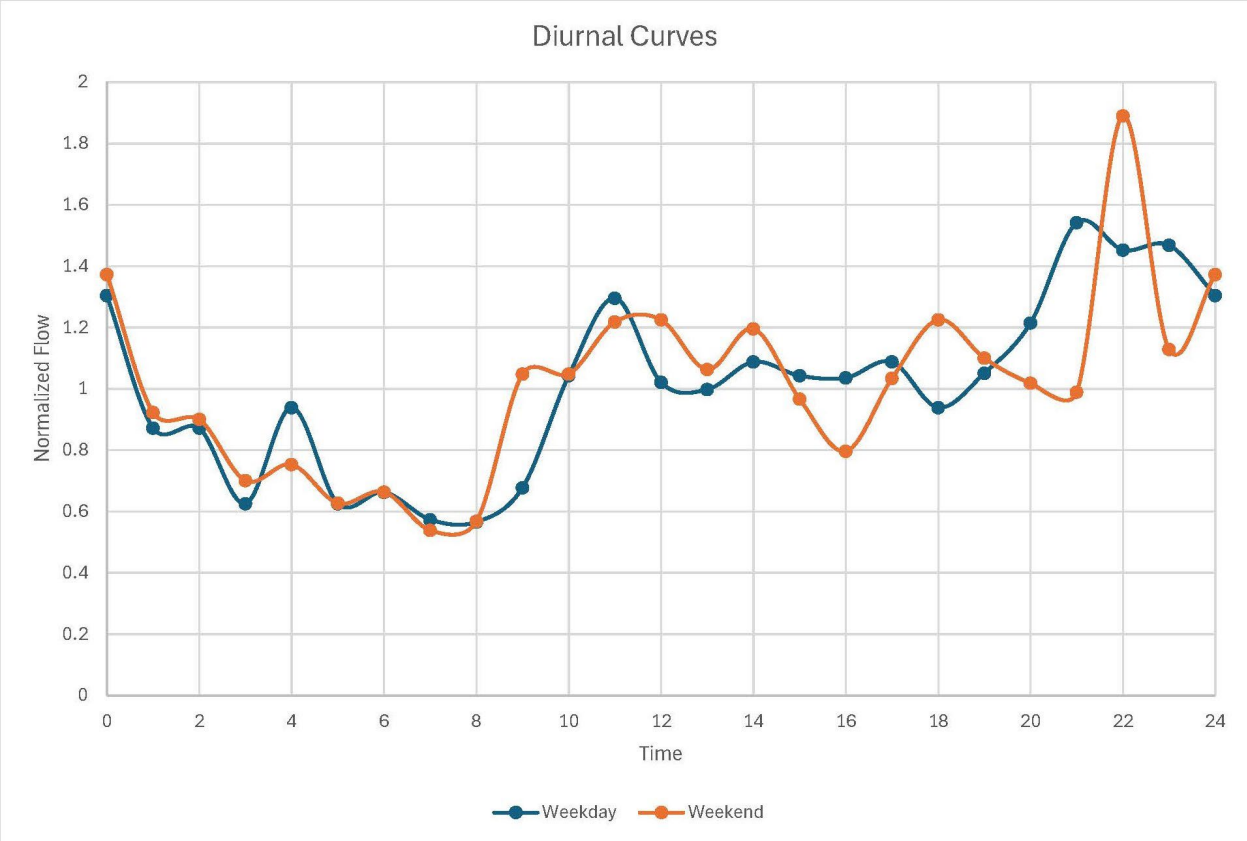

Figure SS 5-1 Average Diurnal Curve

The diurnal curve is somewhat unusual in that the peak normalized flow values occur between 9 and 10 p.m. Flow variations may be affected by the influence of the DOC, which provides a dampened daily flow through their lagoons. In mid-2024, the DOC lagoon effluent pumps were replaced. Based on operational changes with the new pumps, the flow dampening effect is expected to be reduced.

SS 5.4 Inflow and Infiltration (I/I) Analysis

Infiltration is the sewage component associated with groundwater seepage into the sewer system through loose connections and cracked or broken sewer lines. Higher infiltration flows are observed during wet weather months when groundwater is higher. Inflow is the component of wet weather sewage flow associated with stormwater connections to the sewer system and illegal connections. Typical sources of inflow include storm sewers/roof drains directly connected to the sewer, basement sump pumps, and submerged manhole lids. Rainfall-dependent infiltration/inflow (RDII) is the sewage component consisting of stormwater surface runoff entering the sewer system plus additional infiltration from storm-saturated ground conditions. Increased infiltration occurs as precipitation saturates the ground and higher groundwater more easily leaks into the pipe system.

Previous investigations and the current review of recent flow data indicate that I/I is non-excessive in the City's sewer system. The per capita average annual sewer flows indicate non-excessive I/I in that they are lower than typical per capita rates. Similar to the conclusions of earlier studies, treatment of I/I is anticipated to be less costly than repair and replacement of gravity sewers.

A portion of the older downtown piping system is combined, meaning that it was constructed to collect stormwater runoff and convey it to the treatment plant, together with sanitary sewer flow. It is a City priority to install separate storm and sewer piping in this area, thereby reducing wet weather flow into the treatment plant over time. The City has completed multiple projects to date, separating stormwater from sewer piping. Additional projects are planned in the future.

SS 5.5 Projected Flows

The total projected sewage flows for 2024-2044 including all residential, non-residential, and DOC is summarized in Table SS 5-7. It is assumed that the current per capita flow rates used in the calculation of these flows will remain unchanged in the future. Flows are calculated as the product of the per-capita rates developed in Section SS 5.2.1, the projected sewered population, and the peaking factors developed in Section SS 5.3. Table SS 5-7 summarizes the projected average annual sewage flows received at the WWTP throughout the planning horizon. These projected flows are aggregated for the entire collection system and are most relevant for evaluation of the WWTP facilities.

Table SS 5-7
Projected Wastewater Flows

Year	Sewered Residential Population[1]	Sewered Non-Residential Population	DOC Inmate Population[2]	Average Annual Flow (mgd)	Maximum Month Flow (mgd)	Maximum Day Flow (mgd)	Peak Hour Flow (mgd)
2021	14,688	11,324	2,494	1.66	2.20	3.49	4.35
2022	14,836	11,408	2,514	1.67	2.22	3.52	4.39
2023	14,984	11,491	2,534	1.69	2.24	3.55	4.43
2024	15,220	11,575	2,553	1.71	2.26	3.59	4.48
2025	15,573	11,835	2,592	1.74	2.31	3.67	4.57
2026	15,697	11,743	2,593	1.75	2.31	3.68	4.58
2027	15,938	11,826	2,613	1.77	2.34	3.72	4.63
2028	16,182	11,910	2,633	1.79	2.37	3.76	4.68
2029	16,428	11,994	2,653	1.81	2.39	3.80	4.74
2030	16,728	12,198	2,721	1.84	2.44	3.88	4.83
2031	16,925	12,162	2,693	1.85	2.45	3.89	4.84
2032	17,177	12,245	2,712	1.87	2.47	3.93	4.90
2033	17,431	12,329	2,732	1.89	2.50	3.97	4.95
2034	17,686	12,413	2,752	1.91	2.53	4.02	5.00
2035	17,968	12,560	2,809	1.94	2.57	4.08	5.08
2036	18,204	12,580	2,792	1.95	2.58	4.10	5.11
2037	18,466	12,664	2,812	1.97	2.61	4.15	5.17
2038	18,730	12,748	2,832	1.99	2.64	4.19	5.22
2039	18,996	12,832	2,852	2.01	2.67	4.24	5.28
2040	19,255	12,922	2,874	2.04	2.69	4.28	5.34
2041	19,534	12,999	2,891	2.06	2.72	4.33	5.39
2042	19,807	13,083	2,911	2.08	2.75	4.37	5.45
2043	20,081	13,167	2,931	2.10	2.78	4.42	5.50
2044	20,326	13,212	2,954	2.12	2.81	4.46	5.55
2050	22,002	13,648	3,000	2.24	2.96	4.70	5.86
Buildout	28,273	13,648	3,000	2.58	3.42	5.43	6.77

Notes:
1) Sewered residential population represents the sewered population based on number of sewered parcels. Septic to sewer conversions are assumed to occur at a linear rate from 2023 to 2073 with 100% sewer conversion in 2073.
2) Washington State DOC inmate population (both historic and projected) based on PSRC provided data.

THIS PAGE INTENTIONALLY BLANK.

Chapter SS 6 Sanitary Sewer System Analysis

SS 6.1 Introduction

The City's sanitary sewer system was analyzed to determine its ability to serve the future land use presented in the Combined Elements Chapter 3 Land Use and Service Area and projected wastewater flow rates and population presented in Chapter SS 5 Existing and Future Population and Flow Projections. The City's conveyance system was analyzed using a hydraulic model that consists of gravity mains, force mains, and all the pump stations owned by the City. This allows for an accurate representation of the most critical components, covers most of the City's conveyance system, and facilitates simultaneous analysis of both gravity and pressure systems. The system is analyzed under the existing conditions, a 6-year planning horizon, a 20-year planning horizon, and a system build out condition. The existing sewer conveyance system is shown on Figure SS 4-2.

SS 6.2 Existing Sanitary Sewer System Data Collection

Data for the existing sanitary sewer system layout was compiled from multiple previous studies, City provided Geographic Information System (GIS) data, the City's existing spreadsheet hydraulic model, and record drawings. Pump station information, including number of pumps, pump station capacity, and motor horsepower (see Table SS 4-6) was provided by the City. Additionally, City operations staff were consulted for information on system operation and field verification.

SS 6.3 Collection System Model Construction

SS 6.3.1 Model Software

The hydraulic capacity analysis of the City's existing sanitary sewer system was performed using PCSWMM software, by Computational Hydraulics Inc. (CHI). PCSWMM uses the Storm Water Management Model Version 5 (SWMM5) hydraulic engine developed by the United States Environmental Protection Agency (EPA). This model is an upgrade to the City's existing spreadsheet hydraulic model, which was used to analyze the City's sewer network for the 2015 Utility Systems Plan. Use of the modeling software provides increased functionality and flexibility for hydraulic modeling and analysis of results and helps with scenario analysis for future updates.

SS 6.3.2 Data Sources

The following information was obtained and used to develop the hydraulic model of the existing sanitary sewer system:

- Spreadsheet hydraulic model from the 2015 Utility Systems Plan.
- GIS data of the City's sanitary sewer system, including invert elevation and rim elevation of manholes, pipe size and materials for the gravity and force main pipe segments, pump location, pump curves, wet well size, and level controls.
- Record drawings for the recent sewer improvement/ separation projects, pump stations and other relevant projects.
- Light detection and ranging (LIDAR) digital terrain model (DTM) obtained from the Washington LIDAR portal.

SS 6.3.3 Model Coverage and Hydraulic Features

The sanitary sewer system model was constructed to include all force mains, all 8-inch and larger gravity mains and associated 6-inch gravity mains, and associated manholes within the City's sewer system boundary. Lateral pipes and manholes associated with cleanouts have not been included in the model. This results in creation of a functional model representing the sanitary system and addresses the practical challenges that arise with increasing model resolution such as requirement of more granular data.

The model features contain relevant hydraulic information to simulate the physical features of the sanitary sewer system (e.g., diameter, length, material, invert elevation, etc.). Pump stations are represented in the model as links with firm capacity and operational controls, based on the available information.

SS 6.4 Hydraulic Modeling Analysis

SS 6.4.1 Modeling Scenarios

An existing conditions scenario and three future planning scenarios were developed to analyze the City's sanitary sewer system, based on the sewered population forecast provided in Table SS 5-2 and summarized as follows:

- Existing Conditions Scenario –Calculated average dry weather flows and baseline inflow and infiltration (I/I) corresponding to the year 2023.
- 2030 Scenario – Projected average dry weather flows and degraded (increased) I/I flows corresponding to the year 2030.
- 2044 Scenario – Projected average dry weather flows and degraded I/I flows corresponding to the year 2044.
- Build-out Scenario – Projected average dry weather flows and degraded I/I flows corresponding to buildout conditions.

SS 6.4.2 Sewage Flows by Sewer Basins

Projected sewer flows were computed at the sewer basin level (see Figure SS 4-3) based on existing measured flow rates at the Wastewater Treatment Plant (WWTP), water usage data and projected population data. Additional sewer flows for the future planning scenarios were computed using projected changes in population, per capita sewer flow rates, and assumptions discussed in Chapter SS 5 Existing and Future Population and Flow Projections. Table SS 6-1 provides a summary of the dry weather flows by sewer basin.

Table SS 6-1
Dry Weather Flow by Sewer Basin

Sewer Basin	Existing Scenario (gpm)	2030 Scenario (gpm)	2044 Scenario (gpm)	Buildout Scenario (gpm)
Beaton	80.1	91.4	97.7	132.3
Cate's	2.8	3.3	3.5	4.4
Eastside	121.3	123.6	135.6	169.4
French Creek	0.8	7.1	24.1	57.1
Fryelands	113.8	123.6	131.1	166.8
Milwaukie Hill	26.1	27.7	36.7	42.0
Reservoir Hill	86.6	99.5	106.9	121.2
Sawyer	14.3	14.0	14.3	19.3
South Fryeland	99.8	104.9	113.2	147.5
Upper Woods Creek	14.1	15.2	17.0	20.3
Valley View North	100.9	107.6	140.3	113.8
Valley View South	45.7	61.8	103.6	138.9
West Main	6.3	8.7	13.0	58.0
Woods Creek	78.7	89.0	106.9	152.3
State Corrections	191.3	212.0	237.8	242.9

Weekday and weekend diurnal flow curves were applied to dry weather flows, based on the instantaneous flow measurement data at the WWTP for the period from August 9, 2023 to August 13, 2023 (See Figure SS 5-1). Flow from the Washington State Department of Corrections (DOC) was distributed uniformly over the day however and was not subjected to the weekday and weekend curves. This assumption provides an appropriate level of conservatism for establishing flow responses.

Wet weather flow for the existing scenario was derived using the WWTP inflow data, water usage data, precipitation data, and discussions with City staff. Wet weather flow the future scenarios assumed a modest 3% per decade degradation rate for I/I, reflecting the City's efforts in Capital Improvement Plan (CIP) projects to separate the combined storm and sewer portions of the system, while anticipating further degradation of side sewers over time. The 3% degradation rate has been factored into the maximum day and peak hour flow projections summarized in Table SS 5-7.

SS 6.4.3 Sanitary Sewer System Deficiency Criteria

Based on the model assumptions and flow projections, the model was used to simulate the system's performance and identify deficiencies in the conveyance system. The following criteria were used as a basis for identifying potential deficiencies in each of the planning horizons of interest:

- Gravity Mains: The flow depth (d) is greater than twice the pipe diameter (D), or d/D > 2.

- Manholes: Manhole is flooding, leading to sewer overflow.
- Pump Stations: The rated capacity is exceeded.
- Force Mains: The flow velocity exceeds 8 feet per second (fps).

Model results and deficiencies identified in the model were further reviewed to account for instabilities in model hydraulic computations and reporting resolution, to validate results. Industry standard engineering judgment was used to review the simulated results such that the results provided a meaningful planning tool for the City, and that deficiencies were being identified appropriately for the purposes of this analysis. Additional discussion on limitations and uncertainty is included in Section SS 6.5.

SS 6.4.4 Sanitary Sewer System Deficiency Analysis

Model simulations were performed for the aforementioned planning horizons. Based on the system deficiency criteria provided above, the summary of total system deficiencies by category are shown in Table SS 6-2.

Table SS 6-2
System Deficiency by Category

Deficiency Type	Existing Scenario	2030 Scenario	2044 Scenario	Buildout Scenario
Gravity Mains (d/D > 2)	0	0	0	0
Manholes (SSOs)	0	0	0	0
Pump Station (Firm Capacity)	0	0	0	0
Force Mains (V > 8 fps)	4,722 ft	4,722 ft	4,722 ft	4,722 ft

The simulated deficiencies in the force main pipes were identified by computing the flow velocity corresponding to the maximum outflow from the pump stations. The velocity in the force main associated with the Fryelands pump station (total length 4,722 ft) with corresponding flow of 750 gallons per minute (gpm) was computed to be 8.51 ft/s which is higher than the recommended velocity in the force main pipes.

SS 6.5 Limitations and Uncertainty

The hydraulic model was developed to reflect the existing sanitary sewer system in the City based on the previous spreadsheet model, GIS data and newly available record drawings. Sanitary sewer flow values and their distribution throughout the collection system for the existing scenario are based on water usage as per the water meter data for the year 2023. Engineering judgement and industry standard practices were used to fill in data gaps and make assumptions where necessary. Industry standard efforts were made through internal quality assurance and quality control (QA/QC) review of results to ensure that the model provided reliable information for use in deficiency identification.

The model was used in conjunction with understanding of the system to review simulated results and validate deficiencies in the system based on the stated deficiency criteria. The identification of deficient areas is intended to provide planning level information to support the City's efforts. Planning year horizons are intended to provide a relative comparison based on population growth scenarios and potential degradation of the system.

Performance of the physical system for both existing and future conditions may differ from simulated results due to limitations and uncertainty, such as

- Total flow magnitude based on population projections.
- Distribution and timing of flows within the system.
- Distribution of inflow and infiltration within the system.
- The idealized nature of collection system hydraulics and potential for physical clogging and debris within the system.

THIS PAGE INTENTIONALLY BLANK.

Chapter SS 7 Wastewater Treatment Plant

SS 7.1 Introduction

Chapter SS 7 provides a summary of the analysis that was performed to evaluate the City's Wastewater Treatment Plant (WWTP) for its ability to meet treatment objectives over the planning period. The WWTP was initially constructed in the 1950s and has been periodically upgraded since. The detailed history is described in Chapter 2.

The WWTP liquid stream consists of a headworks structure with two mechanical fine screens, an influent lift station and a mechanical vortex type grit removal system. The screened and degritted influent flows by gravity to two rectangular primary clarifiers, three aeration basins with anoxic and aerobic zones, two circular secondary clarifiers, ultraviolet (UV) light disinfection and an effluent pump station. The disinfected WWTP effluent is discharged to the Skykomish River.

The solids stream includes three aerobic digesters in series, sludge transfer pumps, and a belt press for dewatering. The dewatered sludge is hauled by dump truck to the former compost facility site at the Washington State Department of Corrections (DOC) where it is stored for a period and then reloaded onto larger trailers for delivery to a Beneficial Use Facility by a contract hauler. The sludge cake is incorporated into the soil (beneath the surface) in order to meet the vector attraction reduction requirement for Class B biosolids, since there is not always sufficient retention time in the existing digester tanks to achieve the volatile solids destruction necessary to meet the vector attraction reduction requirements. A detailed description of the existing unit processes is presented in Section SS 7.8. A site plan is shown in Figure SS 7-1.

In 2021, improvements were made to upgrade the supplemental alkalinity storage and dosing system, as well as the sodium hydroxide and sodium hypochlorite storage and dosing systems used for the large chemical odor scrubber and trimming effluent pH. Additionally, the mixed liquor recycle pump was replaced and baffles were added to the aeration basins.

Design is currently underway for a solids handling upgrade. The existing belt press will be replaced with a centrifuge and dewatered sludge will undergo a drying process to produce Class A biosolids.

SS 7.2 Treatment Requirements

The WWTP operates under the terms of National Pollutant Discharge Elimination System (NPDES) Permit No. WA-002048-6 last re-issued on December 1, 2018. Although the permit was set to expire on November 30, 2023, the permit remains in effect until a new permit is issued, as the renewal process is ongoing. The permit renewal application was received and approved by the Washington State Department of Ecology (Ecology) on March 28, 2023. There were no significant changes from the prior permit effluent limits, except that the requirements to test for mercury and toxicity were dropped based on low detected concentrations during the prior permit cycle. A copy of the active permit is included as Appendix SS-A.

The treatment WWTP effluent requirements established by the permit are a maximum monthly concentration of 30 milligrams per liter (mg/L) for biochemical oxygen demand (BOD), 30 mg/L for total suspended solids (TSS), and 200 per 100 milliliter (mL) for fecal coliform. There is no effluent limit for ammonia or total nitrogen.

THIS PAGE INTENTIONALLY BLANK.

TERRACE ST

NORTH

0 20 40

Scale in Feet

SAMS ST

SUMAC DR

N01°11'09"W 266.56'

S77°12'31"E

4" WOOD SIGN

HEDGE

HEDGE

CODY GILNICK
27060100419800

SECONDARY CLARIFIER NO. 1

SECONDARY CLARIFIER NO. 2

PRIMARY DIGESTER NO. 1

STORAGE

EG ROOM

MCC ROOM

OFFICE

ENTRY

OPERATIONS BLDG.

LAB

CONC

PRIMARY DIGESTER NO. 2

WET WELL

PUMP ROOM

SECONDARY DIGESTER

UV AREA

WAS THICKENER

WAS TANK

EFFLUENT PUMP STATION

SSMH

MIXED LIQUOR CHANNEL

BLOWER BLDG

FACILITY BLDG

ODOR SCRUBBER

ODOR CONTROL ROOM

GATE

PUMP STATION

SBC

SBC

SBC

SBC

PRIMARY CLARIFIER NO. 1

PRIMARY CLARIFIER NO. 2

PRIMARY PUMP GALLERY

HEADWORKS

SMH

MAGNESIUM HYDROXIDE

UNDERGROUND FUEL STORAGE TANK

AERATION BASIN NO. 1

AERATION BASIN NO. 2

AERATION BASIN NO. 3

RETAINING WALL

Path: S:\Cad\Monroe\22-10808 Monroe Utility Systems\Report\ Filename: F22-10808_Fig 7-1 Plot date: Jun 26, 2024-04:40:43pm CAD User: RNicolas.
Xref Filename: | X23-10809_Ex WWTP | X23-10809_ECM-7A | X23-10809_Ex Aerat Basin | X23-10809_Ex Topo Base |

bhc CONSULTANTS

COPYRIGHT © 2024 BHC CONSULTANTS, LLC. ALL RIGHTS RESERVED

MONROE WASHINGTON

WWTP
Site Layout
Sewer System Plan Update
September 2024

Figure
SS 7-1

THIS PAGE INTENTIONALLY BLANK.

SS 7.3 Treatment Performance

Based on a three-year record of WWTP daily monitoring reports (DMR), included as Appendix SS-B, the WWTP effluent quality has been excellent. Over the last year effluent BOD and TSS concentrations have averaged approximately 6.6 and 6.2 mg/L, respectively. Based on reported quarterly effluent data, effluent ammonia and total Kjeldahl nitrogen (TKN) concentrations have averaged approximately 0.34 mg/L and 3.2 mg/L, respectively. Average annual flows over the last three years have been measured at 1.67 million gallons per day (MGD), and maximum month at 2.22 MGD. Flows are discussed in more detail in Chapter 5.

SS 7.4 NPDES Permitted Capacity and Historical Loading

Section S 4.A of the NPDES permit specifies the permitted capacity of the WWTP based on its design criteria. The WWTP is permitted to treat a maximum monthly flow of 2.84 MGD, a maximum month BOD load of 6,090 pounds per day (lbs/day) and a maximum month TSS load of 5,940 lbs/day. The "maximum month" criterion is the highest monthly average loading in one calendar year.

Section S 4.B of the NPDES permit states that the City needs to submit a plan and schedule to Ecology to maintain capacity if the influent flow or load reaches 85 percent of the design criteria for three consecutive months. The three consecutive monthly measurements that will trigger the Section S 4.B requirement for flow, BOD, or TSS are 2.41 MGD, 5,177 lbs/day, and 5,049 lbs/day respectively. Table SS 7-1 shows the historic influent flow and load record for the period from 2021 through 2023. High loading values reported in December 2023 were excluded due to issues with a level transducer in the influent channel. These loading values had significant variance from the rest of the dataset, corroborating that the data is unlikely to be accurate.

Table SS 7-1
WWTP Historic Flows and Loads (with DOC Lagoons Online)

Year	Flow, MGD			BOD, lbs/day			TSS, lbs/day		
	Avg Annual	Max Month	Max Day	Avg Annual	Max Month	Max Day	Avg Annual	Max Month	Max Day
2021	1.71	2.30	3.43	4.05	3,404	3,719	5,630	2,551	3,208
2022	1.69	2.19	3.38	4.60	4,233	4,999	9,082	3,486	3,919
2023	1.61	2.15	3.72	4.50	4,306	5,021	7,353	3,470	3,974
Permit Limit		**2.84**			**6,090**			**5,940**	
85 % of Limit		2.41			5,177			5,049	

The influent flows and loads are well below the rated WWTP capacity. The maximum month flows have averaged about 2.22 MGD over the last three years and are approximately 78 percent of the WWTP design flow capacity. The maximum month BOD loads have averaged about 75-percent of the WWTP design BOD capacity. Maximum month TSS loading has averaged only 62-percent of the permitted limit. In no case did the maximum month values for flow, BOD, or TSS reach 85 percent of the permitted values, let alone for three consecutive months. Average monthly flows and loads, and the NPDES permit limits are illustrated in Figure SS 7-2.

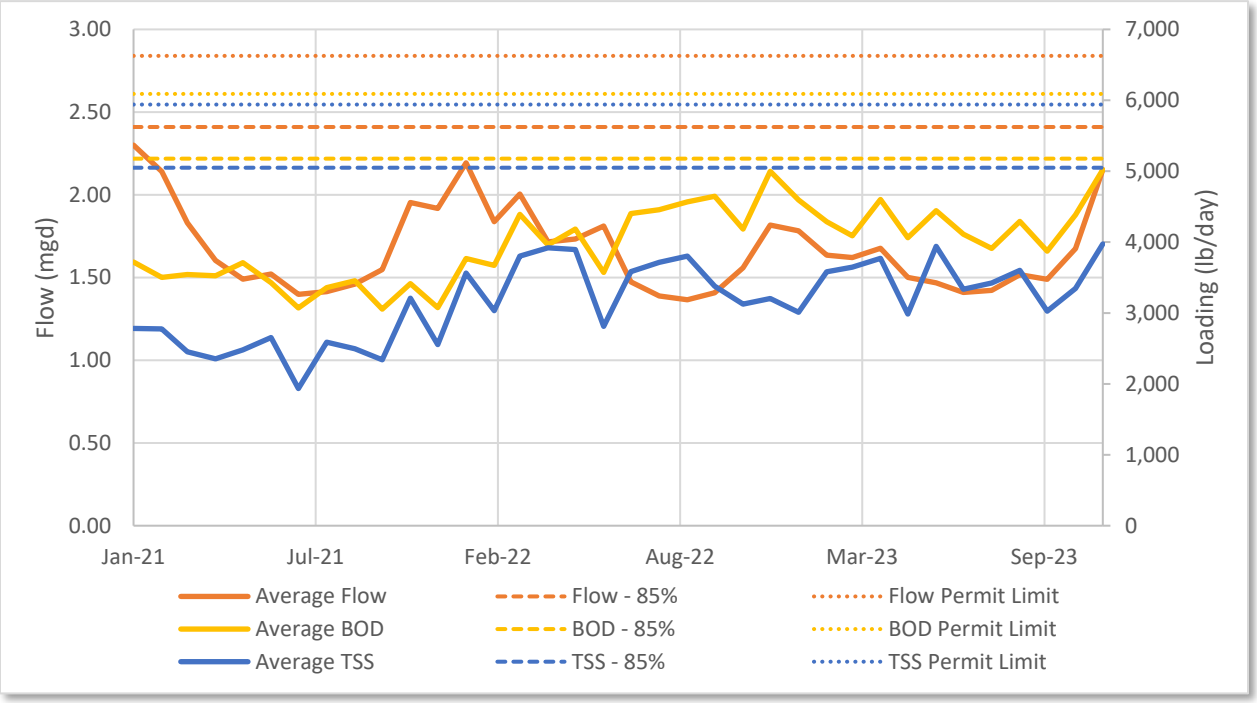

Figure SS 7-2 Average Monthly Flows and Loads

SS 7.5 Violations and Bypasses

The WWTP has consistently met the effluent limitations and remained in compliance with the NPDES permit. The WWTP has not needed to bypass in its operational life.

SS 7.6 Future Capacity Evaluation

A capacity analysis has been conducted as part of this Plan to predict equipment or processes, if any, that are likely to exceed their ability to treat WWTP flows and loads over the planning period. The capacity analysis assumes a worst-case loading with the DOC Monroe Correctional Complex Lagoons out of service and providing no treatment prior to discharging into the collection system.

Projections for future BOD and TSS loads were extrapolated through the predicted population growth and associated flows for the City service area in Chapter SS 5. The flow projections for the WWTP predict a maximum monthly flow of 2.44 in 2030 and 2.81 MGD in 2044. The predicted build-out maximum month flow is 3.42 MGD.

The WWTP rated flow capacity is not projected to be reached within the 20-year planning horizon. However, 85 percent of the permitted flow capacity is projected to be reached in 2029, which may result in the requirement to plan for adequate capacity, as referenced in Section SS 7.4.

Projected future flows in Table SS 7-2 were determined in Chapter SS 5. It should be noted that the peak hour flows used for analyzing capacity at the WWTP differ from the peak hour flows used for analyzing the collection system. The WWTP peak hour flows were derived from measured effluent flow data at the WWTP; whereas the collection system peak hour flows were selected in coordination with the City to be

5.25 MGD, to provide a measure of conservatism in the collection system analysis, while addressing uncertainty in spatial variability of infiltration and inflow throughout collection system piping.

Table SS 7-2
Projected Wastewater Flows

Year	Average Annual Flow (MGD)	Maximum Month Flow (MGD)	Maximum Day Flow (MGD)	Peak Hour Flow (MGD)
2024	1.71	2.26	3.59	4.48
2030	1.84	2.44	3.88	4.83
2044	2.12	2.81	4.46	5.55

SS 7.6.1 DOC Loading Criteria

To determine the effect of bypassing the DOC lagoons and their impact on the WWTP capacity, the previously performed Sanitary Sewer System Plan (Gray & Osborne, Inc., 2008)[1] and Final Engineering Report/Facility Plan (Earth Tech, Inc., 2000)[2] were evaluated for historical DOC loading data. To date, no additional studies pertaining to the DOC lagoons have been performed. Previous analyses, including the 2015 Utility Plan and 2019 Engineering Report, were based on these studies. The data used ranges from January 1997 to December 1999, and March 2004 to February 2006.

To determine loading pounds per inmate per day (lb/inmate/d), the influent DOC data from the previous studies were applied to estimate average per inmate loadings produced prior to any treatment. Table SS 7-3 summarizes the extracted data from the two studies.

Table SS 7-3
Washington State Department of Corrections Per Capita Loading

Constituent	Earth Tech (2000) (lb/inmate/d)	G&O (2008) (lb/inmate/d)	Average[1] (lb/inmate/d)
Annual Average BOD	0.46	0.32	0.37
Max Month BOD	0.65	0.51	0.57
Annual Average TSS	0.33	0.33	0.33
Max Month TSS	0.49	0.74	0.65

Note:
1) Calculated by a weighted average of the DOC population given in each study.

The overall DOC load prior to treatment in the lagoons was calculated based on the average per capita data presented in Table SS 7-3. The datasets from the 2000 Engineering Report and 2008 Sewer Plan were used to estimate the BOD and TSS removal rates provided by the lagoon treatment system. The average BOD and TSS removal rates were calculated at 83 percent for BOD removal and 82 percent for TSS removal, which aligns with the analysis of this data in the City's Utility Systems Plan - Sanitary Sewer,

[1] Gray & Osborne, Inc. (2008). *Sanitary Sewer System Plan*. Gray & Osborne, Inc.

[2] Earth Tech, Inc. (2000). *Final Engineering Report/Facility Plan*. Earth Tech, Inc.

Water and Stormwater Draft (BHC Consultants, LLC, 2015)[3]. The average annual and max month conditions did not have a statistically significant difference on the removal efficiency. Table SS 7-4 summarizes the average annual and maximum month loads for BOD and TSS both with and without the pretreatment lagoons.

Table SS 7-4
Average Annual and Maximum Month Loads for BOD and TSS from DOC

Year	Number of Inmates	BOD, lbs/day[1] (Pretreatment Lagoons Offline)		TSS, lbs/day[1] (Pretreatment Lagoons Offline)		BOD, lbs/day[1,2] (Pretreatment Lagoons Online)		TSS, lbs/day[1,2] (Pretreatment Lagoons Online)	
		Avg Annual	Max Month	Avg Annual	Max Month	Avg Annual	Max Month	Avg Annual	Max Month
2021	2,494	923	1,421	823	1,621	160	246	149	294
2022	2,514	930	1,433	830	1,634	161	248	150	296
2023	2,534	937	1,444	836	1,647	162	250	152	299

Notes:
1) Based on average per capita loading presented in Table SS 7-2.
2) Calculated based on estimated BOD and TSS removal efficiencies from data used for City's Utility Systems Plan - Sanitary Sewer, Water and Stormwater Draft.

SS 7.6.2 Residential/Non-Residential Loading Criteria

The residential and non-residential loading were analyzed as a single group. The DOC load with pretreatment online was subtracted from the total loading reported in the facility Discharge Monitoring Reports (DMR). The sum of the residential and non-residential population was used to determine the per-capita loading rates for residential and non-residential sources. While it is possible that there is some real-world difference between residential and non-residential loading, the City's unique combination of commercial and industrial uses is such that residential and non-residential loads are expected to be similar. Additionally, there is no feasible method for differentiating these loads, as long-term sampling would need to occur at the source before non-residential sewage is mixed with residential. Residential and non-residential per capita loading data is summarized in Table SS 7-5.

Table SS 7-5
Residential and Non-Residential Loading

Year	Sewered Residential + Non-Residential Population	BOD, lbs/day		TSS, lbs/day		BOD Loading, lb/cap/d		TSS Loading, lb/cap/d	
		Avg Annual	Max Month	Avg Annual	Max Month	Avg Annual	Max Month	Avg Annual	Max Month
2021	26,012	3,245	3,473	2,402	2,914	0.12	0.13	0.09	0.11
2022	26,244	4,072	4,751	3,335	3,623	0.16	0.18	0.13	0.14
2023	26,475	4,144	4,771	3,318	3,675	0.16	0.18	0.13	0.14
Average	26,244	3,820	4,331	3,019	3,404	0.15	0.17	0.12	0.13

[3] BHC Consultants, LLC (2015, April 2). *City of Monroe Utility Systems Plan – Sanitary Sewer, Water and Stormwater Draft*. BHC Consultants, LLC.

SS 7.6.3 Projected WWTP Loading

Applying the above average loading criteria in Table SS 7-4 and Table SS 7-5, the projected WWTP loading with no DOC Lagoon pretreatment was computed. It is assumed that future years will operate with the DOC lagoons offline. This is a conservative assumption intended to allow the City to maintain treatment capacity should the DOC decide to take their lagoons offline. Additionally, as noted in the 2022 Engineering Report, the additional load realized at the WWTP is beneficial to the nutrient removal process, as it provides additional carbon to drive denitrification. Historical loading data for 2021-2023 and future projected loading conditions for 2024-2044 are provided in Table SS 7-6.

Table SS 7-6
Projected Loading

Year	Sewered Residential Population	Sewered Non-Residential Population	DOC Inmate Population	BOD, lbs/day		TSS, lbs/day	
				Avg Annual	Max Month	Avg Annual	Max Month
2021	14,688	11,324	2,494	4,709	5,715	3,815	4,995
2022	14,836	11,408	2,514	4,750	5,764	3,848	5,038
2023	14,984	11,491	2,534	4,791	5,814	3,881	5,081
2024	15,220	11,575	2,553	4,845	5,878	3,925	5,135
2025	15,573	11,835	2,592	4,949	6,001	4,008	5,240
2026	15,697	11,743	2,593	4,954	6,007	4,012	5,245
2027	15,938	11,826	2,613	5,008	6,072	4,056	5,300
2028	16,182	11,910	2,633	5,063	6,137	4,100	5,355
2029	16,428	11,994	2,653	5,119	6,203	4,144	5,411
2030	16,728	12,198	2,721	5,217	6,325	4,225	5,521
2031	16,925	12,162	2,693	5,230	6,335	4,234	5,523
2032	17,177	12,245	2,712	5,286	6,402	4,279	5,579
2033	17,431	12,329	2,732	5,343	6,469	4,325	5,636
2034	17,686	12,413	2,752	5,400	6,537	4,370	5,693
2035	17,968	12,560	2,809	5,483	6,640	4,438	5,785
2036	18,204	12,580	2,792	5,514	6,672	4,462	5,808
2037	18,466	12,664	2,812	5,572	6,741	4,508	5,866
2038	18,730	12,748	2,832	5,630	6,809	4,555	5,924
2039	18,996	12,832	2,852	5,688	6,879	4,602	5,982
2040	19,255	12,922	2,874	5,747	6,949	4,649	6,042
2041	19,534	12,999	2,891	5,806	7,018	4,696	6,099
2042	19,807	13,083	2,911	5,865	7,088	4,744	6,158
2043	20,081	13,167	2,931	5,924	7,158	4,791	6,218
2044	20,326	13,212	2,954	5,975	7,219	4,832	6,270

Notes:
1) Residential population represents the sewered population based on number of sewered parcels. Septic to sewer conversions are assumed to occur at a linear rate from 2023 to 2073 with 100 percent sewer conversion in 2073.
2) DOC population (both historic and projected) based on Puget Sound Regional Council (PSRC) provided data.

The projected BOD loading in 2028 is anticipated to exceed the WWTP NPDES permitted maximum month of 6,090 lbs/day BOD. The projected TSS loading in 2039 is anticipated to exceed the WWTP NPDES permitted maximum month of 5,940 lbs/day. These projections assume the DOC pretreatment lagoon is not operational. Historically, the City has preferred to maintain a conservative approach that the lagoons will be taken offline, but to date there is no indication that this will happen. Should the lagoons be offline, it is recommended that the City study re-rating the WWTP to allow for additional permitted capacity.

If the lagoons are kept operational throughout the planning horizon, the 2044 projected maximum month BOD and TSS loadings are 5,827 lbs/day and 4,698 lbs/day respectively. Both of these parameters are within the maximum month loads specified by the NPDES permit, suggesting that the WWTP will not be capacity restrained in the 20-year planning period if the pretreatment lagoons are kept operational. However, as noted above, the City prefers to take a conservative approach in assuming that the lagoons are brought offline. The assumption of the DOC pretreatment lagoons being taken offline was used for subsequent analysis.

SS 7.7 Unit Process Descriptions

The following is a detailed narrative description of the existing unit treatment components that are included in Appendix SS-C for capacity evaluation.

SS 7.7.1 Headworks

Wastewater enters the facility by gravity at the headworks structure, which includes influent screening, lift pumps, and grit removal. The screening facility includes two mechanical screens with a screen opening of 3 millimeter (mm) and a capacity of 6.17 MGD each, and one manual bypass bar screen with openings of 3/8 inches. Screenings are conveyed to a washer/compactor and are discharged to a dumpster.



Photo SS 7-1 Headworks Mechanical Screens

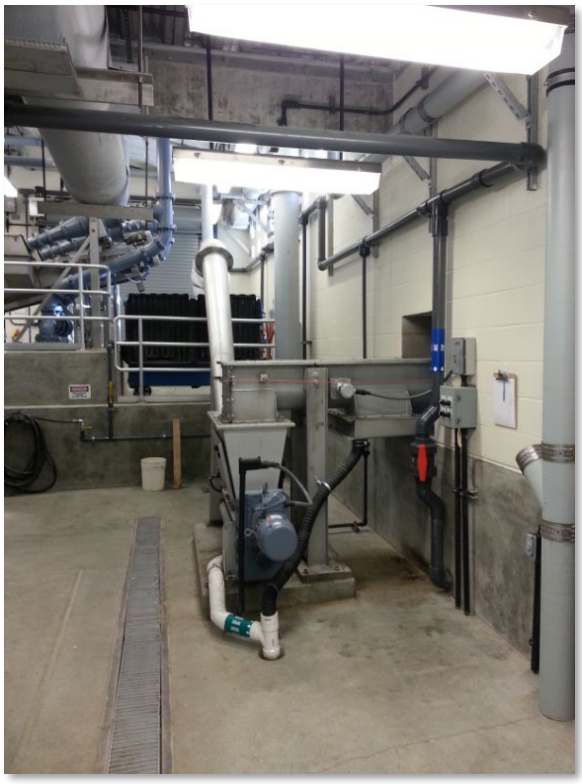

Photo SS 7-2 Screening Washer/Compactor

The screened sewage is discharged to two wet wells. The east wet well contains three (2 duty plus one standby) submersible pumps, one with a capacity of 4.0 MGD and two with a capacity of 1.0 MGD. The west wet well contains two submersible pumps, each with a capacity of 4.0 MGD. The total capacity is approximately 14.0 MGD and the total firm capacity (the capacity with the largest pump out of service) is 10.0 MGD. Each pump has a separate discharge pipe that discharges to a common grit influent channel. Each discharge line has a flow meter.

The grit capture system is a 12-foot diameter mechanical vortex basin with a capacity of 12.0 MGD. The captured grit is pumped to two, 250 gallons per minute (GPM) each, cyclone washing units and then to a grit classifier.

SS 7.7.2 Primary Clarifiers

Sewage from the headworks flows by gravity to a splitter box and then to one of two rectangular primary clarifiers. The primary clarifiers provide for gravity settling of settleable solids and skimming of floatables. The primary clarifiers are designed for at least 45 percent removal of suspended solids and 25 percent removal of BOD prior to the secondary process. Each primary clarifier is 13 feet wide by 66 feet long, for a surface area of 858 square feet (sf) each, or 1,716 sf total. Based on a maximum design peak hour surface overflow rate of 2,500 gpd/sf, the primary clarifiers have a peak hour flow capacity of 4.3 MGD.

The primary clarifiers were constructed with the Phase I improvements in 1995. In 2016, the clarifier collector mechanisms, launders, skimmers, and scum pumps were replaced, as the prior equipment was over 20 years old and had reached the end of its service life.



Photo SS 7-3 Primary Clarifiers

SS 7.7.3 Aeration Basins

Effluent from the primary clarifiers flows into a splitter box and then by gravity to the aeration basins. The old submerged biological contactor (SBC) tanks remain but are not being used because they were not designed to nitrify.

The aeration basins consist of three trains, each includes four small anoxic selector and denitrification tanks in series with a total volume of 98,600 gallons per train, followed by a larger aerobic aeration tank with a volume of 368,000 gallons per train. The aeration basin has a design solids retention time of 10.9 days, which is sufficient for complete ammonia nitrification.

In 2021, Aeration Basins 1 and 2 were retrofitted to add baffling between the two diffuser zones in each basin. This allows each aeration zone to use a different target dissolved oxygen (DO) concentration and reduce the quantity of DO recycled to the anoxic zones.



Photo SS 7-4 Aeration Basins

Nitrification uses alkalinity and there is insufficient influent alkalinity to buffer the demand. As a result, the WWTP has had to add about 120 gpd of alkalinity. Submersible mixers installed in the anoxic zones eliminated coarse bubble aeration that was previously used to mix the anoxic zones. This reduces dissolved oxygen in the anoxic zones thereby improving denitrification.

Two turbo blowers are used to provide air to the aeration basins. Each turbo blower has a capacity of 2,000 standard cubic feet per minute (scfm). Two older centrifugal blowers remain as backup. Typically, only two of the three aeration basins are in service at any time. It is recommended that the two existing centrifugal blowers be replaced with one more turbo blower in the future when all three basins are online to retain high efficiency and reliable redundancy.

SS 7.7.4 Secondary Clarifiers

Mixed liquor is collected from each aeration basin train in a single mixed liquor channel, where it flows to a distribution box that splits the flow to two secondary clarifiers. Clarifier No. 1 was constructed in 1995 with a 42-foot diameter and 13-foot depth and upgraded in 2017 with a new collector mechanism. Clarifier No. 2 was constructed in 2002 with a 68.7-foot diameter and 16-foot depth.

The current flow split between the two clarifiers sends 25 percent of the flow to Clarifier No. 1, underloading it to allow the activated sludge solids to thicken to approximately 10,000 mg/L prior to wasting. Waste activated sludge (WAS) is collected solely from Clarifier No. 1; thus, thicker solids are sent to the disk thickener and/or aerobic digesters to minimize the volume entering the digesters and maximize the retention time for digestion. The remaining flow is sent to Clarifier No. 2, which produces return activated sludge (RAS) at a concentration of around 6,000 mg/L.



Photo SS 7-5 Secondary Clarifier No. 2

Secondary effluent flows by gravity to UV disinfection. RAS is collected and returned to the head of the aeration basins using four RAS pumps, two per clarifier (one duty and one standby). Each clarifier has a WAS pump, though each pump can pull WAS from either clarifier. WAS is currently only collected from Clarifier No. 1.

SS 7.7.5 UV Disinfection

Clarified effluent from the secondary clarifiers flows by gravity to four in-line, closed vessel, medium-pressure, high-intensity UV disinfection units. The units were installed with the Phase III upgrades in 2012. Each UV reactor has a design capacity of 2.5 MGD, for a total capacity of 10.0 MGD, and a firm capacity of 7.5 MGD. The UV system design was based on providing a dose of 25 millijoules per square centimeter (mJ/cm^2) with a minimum transmittance of 55 percent.



Photo SS 7-6 UV In-Line Units

SS 7.7.6 Effluent Pump Station, Outfall, and Receiving Waters

The outfall receiving water is the Skykomish River. UV disinfected effluent flows by gravity through the outfall pipeline that consists of 24-inch and 30-inch diameter concrete pipes to four 12-inch diameter diffusers submerged in the river. The total length of the outfall is approximately 1,500 feet. The Skykomish River water level in the vicinity fluctuates from as low as approximately 37 feet to as high as the 100-year flood elevation of 58 feet.

Normally, disinfected effluent flows by gravity to the outfall in the Skykomish River. However, during periods of high flow and/or high river levels effluent pumping is necessary. Effluent pumping is necessary when the headloss of flow through the gravity outfall plus the water surface elevation in the effluent structure is lower than that of the water surface elevation of the Skykomish River.

The Effluent Pump Station, which was built in 2002 and upgraded in 2012, consists of 3 pumps (2 duty; 1 standby) each with a rated capacity of 5.0 MGD. The total capacity is approximately 15.0 MGD and the total firm capacity (the capacity with the largest pump out of service) is 10.0 MGD. Due to constantly changing conditions in the Skykomish River, the outfall diffuser outlets often transition between being fully unobstructed and partially obstructed. This can result in higher headloss than is factored into the current pump design, which may impact the pumping capacity.

Existing Condition of Outfall

As required per the NPDES permit, the City conducts annual dye tests to verify the functionality of the individual diffuser lines. In September 2016, the City conducted its annual dye test and subsequently observed that two of the four diffuser pipes (the two upstream-most diffusers) were damaged, which was

immediately reported to both Ecology and the Snohomish County Health District. The Monroe Outfall Condition Assessment Technical Memorandum (BHC, 2016)[4] details the damage observed in 2016 and the City's response. The damaged diffuser pipes were repaired in 2017 to restore full function of the outfall.

The annual dye test conducted in August 2019 showed no signs of concern regarding the functionality of the outfall's diffuser system. However, as mentioned above, dynamic changes to the riverbed and bathymetry can result in partial obstruction of the diffuser outlets.

Under the current NPDES permit (WA0020486), an outfall inspection was conducted in 2022 using a dye test. Inspection revealed that the outfall is in good working order, with all plumbing secure and intact. The City prepared the report, with photos, and submitted to Ecology in 2022.

Mixing Zone Study

An Effluent Mixing Zone Study Report – Updated February 2022 (Kennedy Jenk, 2022)[5] was most recently completed by Kennedy Jenks in 2022. The final dilution factors were determined to be:

- Acute Aquatic Life Criteria = 8.4
- Chronic Zone for Aquatic Life = 17.4
- Human Health/Carcinogens = 84.2
- Human Health/Non-carcinogens = 21.7

These values differ from the existing permit due in large part to changes in Ecology's mixing study guidance, which now uses a toxicology-based approach. No reasonable potential analysis was included as a part of this mixing zone study. As the dilution factors have generally increased when compared to the previous mixing zone study in 2009, it is not expected that additional discharge limits will be imposed.

SS 7.7.7 Sludge Handling

WAS is pumped from the secondary clarifiers through two self-priming WAS pumps into the WAS2 sludge holding tank. WAS at about 1 percent solids is pumped from this tank to a rotary disk thickener through a 100 gpm progressive cavity pump. Thickened WAS, around 4.5 percent solids is pumped through a 50-gpm progressive cavity pump to the aerobic digesters (typically the Primary Digester). Although the thickener is capable of producing higher solids concentrations, the City limits the thickening and the amount of WAS thickened so that the ratio of WAS to primary sludge is not too out of balance, which can impact the sludge dewaterability. Additionally, greater amounts of thickened sludge increases the oxygen demand which can make it difficult to maintain a measurable dissolved oxygen residual in the Primary Digester.

Primary sludge, thickened WAS, and scum are pumped into a common pipe that feeds the aerobic digesters, with an overall solid's concentration of around 2 percent. The three aerobic digester tanks are operated in series, which provide digestion of the solids. The three tanks have a total volume of about 240,000 gallons and provide a solids retention time of about 6.5 days at 2.0 percent solids concentration. Although this is far short of the 42-day retention time necessary to meet pathogen reduction criteria for Class B biosolids based on retention time and does not typically yield the 38 percent volatile solids destruction typically used to meet the vector attraction reduction (VAR) standard, there is also significant

[4] BHC Consultants, LLC (2016, November 4). *Monroe Outfall Condition Assessment Technical Memorandum*. BHC Consultants, LLC.

[5] Kennedy Jenks (2022, February). *Final Rev01 Effluent Mixing Zone Study Report – Updated February 2022*. Kennedy Jenks.

sludge stabilization occurring in the extended aeration secondary treatment process. For that reason, the City is able to meet the Class B pathogen standard by testing for pathogen densities and is able to meet the VAR standard by incorporating the solids beneath the soil at the land application site if volatile solids destruction is below 38 percent.

After digestion the sludge is dewatered using a 1.5-meter belt filter press with a hydraulic capacity of 120 gpm. The dewatered sludge cake is hauled in the City's 5 cubic yard (CY) dump truck to the former composting site at the DOC. The City normally operates the belt press for five or six days per week and makes three truck runs for each dewatering day (approximately 15 to 18 per week). At the DOC the loads are consolidated into commercial haul trucks for transport to the agricultural land application site.

Design to replace the belt filter press with a centrifuge and a sludge dryer is ongoing as of this Plan. The dewatering feed pumps will be replaced with larger pumps, pumping to a centrifuge in a larger dewatering building constructed in the same location as the existing building. The centrifuge will discharge to a 30 CY dewatered cake hopper, providing storage and equalization of dewatered sludge. Dewatered sludge from the hopper will then be pumped to the dryer, which will dry the biosolids to 90 percent or greater, producing a Class A product. As the drying process will meet Class A requirements on its own, operation of the digesters to produce a Class B biosolid will not be a requirement, which may allow the City to operate at reduced dissolved oxygen concentrations or even take a digester out of service entirely. Providing some digestion of sludge, however, will reduce the quantity of sludge that needs to be processed.

SS 7.7.8 Odor Control

Foul air generated by the WWTP is treated in order to avoid consequent odor impacts on the adjacent Skykomish River Centennial Park and nearby residences. The WWTP has two foul air collection and treatment systems.

A chemical scrubber system collects and treats foul air from the headworks, primary clarifiers, Dewatering Building, and aeration basins. Hydrogen sulfide, ammonia, and other odorous compounds are removed from the collected foul air using packed-bed towers with sodium hypochlorite (NaOCL) and sodium hydroxide (NaOH) combined with water spray.

An absorptive odor control system collects and treats foul air from the aerobic digester tanks and WAS2 sludge holding tank using an engineered media, which is designed to absorb hydrogen sulfide, reduced sulfur compounds, and mercaptans.

The absorptive odor control system will treat foul air from the new dryer, and foul air from the sludge storage tank will be diverted to the chemical scrubber, which will also treat foul air from the dried cake hopper and other equipment supporting the drying process.

SS 7.8 WWTP Unit Process Capacity Evaluation

In addition to the overall WWTP NDPES limits, the capacity of the WWTP's individual unit processes were evaluated against typical design values, as shown in literature that is widely consulted in the wastewater engineering field, including *Wastewater Engineering: Treatment and Reuse* (Metcalf & Eddy, 2002)[6]; *Design of Municipal Wastewater Treatment Plants* (Water Environment Federation (WEF) and American

[6] Metcalf & Eddy. (2002, January 1). *Wastewater Engineering: Treatment and Reuse*. Metcalf & Eddy.

Society of Civil Engineers (ASCE), 1992)[7]; and *Criteria for Sewage Works Design (Orange Book)* (Washington State Department of Ecology, 2023)[8].

Using the flow and load projections developed herein, the capacities of the unit processes were compared with commonly accepted design values, as summarized in Appendix SS-C. The capacities of the mechanical equipment are based on the manufacturer's rating and the WWTP design data. BioWin process modeling was utilized to provide values related to the biological process. This was performed using the same baseline process models presented in the *2022 Engineering Report* (Kennedy/Jenks, 2022)[9]. The only changes made in the model were to add baffling to the aeration basins, utilize a generic dewatering unit with 90 percent capture, and use of updated flow projections. An updated influent characterization was not performed, as the prior work for the 2022 Engineering Report was considered recent enough to be sufficiently accurate. That influent characterization made the same assumptions made in this Plan regarding the DOC pretreatment lagoons being offline. Additionally, the 2044 scenario was assumed to operate will all three aeration basins online, with identical baffling and dissolved oxygen setpoints across each of the three basins.

SS 7.8.1 Unit Process Capacity

The unit process WWTP capacity limitations that were identified for the projected flows and loads are summarized in Appendix SS-C. Appendix SS-C is based on the DOC lagoons being out of service. Yellow shaded cells show processes which exceed normal design standards or the NDPES permit. Green shaded cells indicate data that was derived from BioWin process modeling. The following text is evaluation of each identified capacity limitation.

Influent Loading

Influent loading is projected to exceed the design criteria for BOD loading listed in the NPDES permit in 2028. This assumes that the DOC lagoons are brought offline. If the DOC lagoons are kept online, there are no projected design criteria exceedances within the 20-year planning horizon. As a result, a re-rating study would be necessary if the DOC lagoons are brought offline. The evaluation in Section SS 7.8 suggests that the WWTP indeed has capacity for the additional loads from taking the lagoons offline. As discussed in the 2022 Engineering Report, the additional BOD load would be a preferable situation to pretreatment in the DOC lagoons, as the additional carbon load associated with skipping pretreatment would be beneficial to the nutrient removal process. The process for re-rating is discussed in Section G1-5.3.2 of the Orange Book, and would require an Engineering Report. It should be noted that improvements to secondary treatment would also require an Engineering Report, and they would be designed for the higher loading projections. Assuming these improvements were constructed and operational prior to the realization of increased loading, no re-rating study would be needed.

Primary Clarification

The primary clarifiers are expected to exceed typical design guidance for surface overflow rate (SOR) in 2036. The average annual SOR is projected to be 1,235 gpd/sf in 2044, which slightly exceeds the high end of the recommended range (800-1,200 gpd/sf). The 2044 peak hour SOR is projected to be 3,237 gpd/sf, which exceeds the high end of the recommended range (2,000-3,000 gpd/sf).

[7] WEF and ASCE. (1992). *Design of Municipal Wastewater Treatment Plants.* WEF and ASCE.

[8] Washington State Department of Ecology. (Revised 2023, May). *Criteria for Sewage Works Design (Orange Book).* Washington State Department of Ecology.

[9] Kennedy/Jenks Consultants, Inc. (2022, August 16). *2022 Engineering Report*. Kennedy/Jenks Consultants, Inc.

Chemically enhanced primary treatment (CEPT) can be implemented to operate during peak hour flows. CEPT is advantageous because it alleviates expensive capital investment and use of valuable space for more primary clarifier tanks.

Chemically enhanced primary treatment (CEPT) involves the addition of flocculants, such as alum or other metal salts, and polymer to the influent to the existing primary clarifiers. With the addition of flocculants, the suspended solids coagulate into large particles that settle faster. As a result, the design peak surface overflow rate can be increased from 2,500 gpd/sf to perhaps over 5,000 gpd/sf. At 5,000 gpd/sf, the existing primary clarifiers with chemical addition would have a maximum performance-based capacity of 8.58 MGD.

Alternatively, the configuration of the two existing Primary Clarifiers can facilitate the addition of a third clarifier which was envisioned in the 1995 improvements. Both CEPT and the addition of a third clarifier were evaluated in the 2022 Engineering Report, along with an option of making no improvements to the primary clarifiers and allowing more loading to shift to secondary treatment. Given that improvements to secondary treatment are required to address limitations with secondary clarification and improve nitrogen removal, the City elected to accept lower performance through the existing primary clarifiers at slightly higher than typical loading rates. Consequently, the primary clarifiers are projected to have a TSS removal rate of 45 percent at future flows, compared to a more typical 60 percent removal rate. This lower removal rate was factored into the analysis of secondary treatment alternatives presented in the 2022 Engineering Report.

Secondary Clarification

Secondary clarifiers are typically designed for a SOR of 600-800 gpd/sf at maximum month flow, and 1,200-1,600 gpd/sf at peak hour flow. Sizing of secondary clarifiers also considers the solids loading rate (SLR), which is recommended to be between 1.0-1.5 lbs/sf/hr at maximum month flow, and less than 2 lbs/sf/hr at peak hour flow.

As a Reliability Class II facility, the secondary clarifiers must have capacity for at least 50 percent of the total design flow with one clarifier out of service. This is true for primary sedimentation basins as well, which are both of equal size. In the case of the secondary clarifiers, their size differs, meaning that the smaller clarifier must be capable of treating half the design flow.

Based on the requirements of Reliability Class II, the SOR for the smaller secondary clarifier exceeds typical design guidance for 50 percent of the maximum month and peak hour flow in 2044, when the maximum month flow is about 2.8 MGD and the peak hour flow is about 5.5 MGD. The SLR is projected to exceed the typical design value of 2.0 lb/sf/hr at 50 percent of the peak hour flow with only the smaller secondary clarifier in service at a flow of 5.1 MGD, which is projected to occur in 2035. This is based on a simple spreadsheet analysis and does not factor in typical settling characteristics, such as sludge volume index (SVI), and diurnal flow patterns. The 2022 Engineering Report performed state point analysis based on SVI data collected by plant staff and a typical diurnal flow pattern. That state point analysis indicated that the secondary clarifiers were projected to be overloaded at a maximum month flow of 2.6 MGD. Based on projections performed under this Plan, the 2.6 MGD threshold isn't expected to be hit until 2038.

It should be noted that one of the conditions of the analysis performed is that the third aeration basin is brought online by 2044. Currently, only two of the three aeration basins are normally in use. As identified in the 2022 Engineering Report, the third aeration basin is intended to be utilized as part of a future

sidestream membrane bioreactor (MBR) process that will address both limitations on the secondary clarifiers by reducing the load on them and also improve nutrient removal to meet future nitrogen limits.

Digester Blowers

The digester blowers have a total firm capacity of 2,000 cfm. It is estimated that 2,489 cfm is needed in 2024, and 3,049 cfm in 2044. This is based on the quantity of oxygen required to achieve 40 percent volatile solids destruction. If 25 percent volatile solids destruction were the goal, which is consistent with the approximately 22 percent volatile solids destruction assumed with the dryer system sizing, only 1,905 cfm would be needed for the digesters. As a result, additional digester blower capacity is not necessary.

SS 7.9 Future Regulatory Issues for WWTP

In 2021, Ecology issued the Puget Sound Nutrient General Permit (PSNGP) to start the process for limiting the discharge of inorganic nitrogen to the Puget Sound. As the City's WWTP does not discharge directly to Puget Sound, it has been excluded from the initial issuance of the general permit. Additional studies are underway to model the impact of nutrients from tributary watersheds, which is expected to result in future discharge limits on inland dischargers. This will affect the City's NPDES permit at some point in the future, with anticipated limits for nitrogen, and possibly phosphorus as well, pending the results of future watershed modeling efforts.

Nutrient removal was included as part of the evaluation for secondary treatment alternatives with the 2022 Engineering Report. As stated previously, it was recommended that a sidestream MBR process be implemented to address nutrient concerns as well as overloading of the secondary clarifiers.

SS 7.10 WWTP Improvements and Additional Needs

SS 7.10.1 Structure Age / Condition

In general, concrete structures and masonry buildings have a normal service life of 50 to 60 years. The existing Main Building was constructed in 1975, so it is 49 years old and may be nearing the end of its useful life. However, much of the structure has been rehabilitated through the various projects that have occurred since its initial construction. Actual cost will vary per structure, but it can be conservatively estimated that the cost for selective demolition and renovation would be approximately $350 per square foot.

SS 7.10.2 Equipment Age / Condition

In general, major wastewater treatment process equipment has a service life of about 20 years. Equipment identified as aging in previous plans, including mixers, blowers, diffusers, and clarifier mechanisms, have since been replaced as part of the Energy Service Company (ESCO) projects. No additional mechanical equipment has been identified as ageing and in need of replacement. However, the original motor control centers and main control panel are in need of replacement. Portions of the motor control centers will be replaced as part of the dryer project, but the remaining sections will still require replacement.

SS 7.10.3 Equipment Obsolescence

In addition to age and condition issues, some equipment is functionally obsolete. The WWTPs Supervisory Control and Data Acquisition (SCADA) system should be reviewed for functional obsolescence as it is 25 years old. Programmable Logic Controllers (PLC), computers and other instrumentation and control equipment are generally functionally obsolete in 10-15 years, making service of older systems increasingly

difficult. As mentioned above, the Main Control Panel, housing the Main PLC, is currently considered obsolete.

SS 7.11 WWTP Conclusions and Recommendations

In conclusion, the WWTP has sufficient capacity to treat the projected BOD and TSS loads throughout the planning period if the DOC pretreatment lagoons are kept operational. If the lagoons are brought offline, a re-rating study is recommended to determine the maximum permissible loadings, as it appears that the WWTP has the ability to maintain treatment even with higher loads.

The WWTP is capable of meeting current effluent permit conditions and no changes are expected to be required to meet the requirements of the NPDES permit that is in the renewal process. Some WWTP improvements will be necessary during the planning period due to pending nutrient limits; structure and equipment age, condition, and/or obsolescence; or a need for improved process performance and efficiency.

SS 7.11.1 Updates Since the 2022 Engineering Report

The 2022 Engineering Report was approved by Ecology in November 2022. It identified and provided a basis for the following improvements:

- pH and Filament Control – construction completed in 2023.
- Secondary Treatment Upgrades via Sidestream Membrane Bioreactor – no work completed to date.
- Solids Handling and Treatment Upgrades to a Class A Facility – preliminary design with Energy Services Company underway.
- Plantwide Pump and Ultraviolet Disinfection Upgrades – no work completed to date.
- Electrical and Controls Considerations – some work incorporated into Solids Handling upgrades. Additional considerations may be needed for Secondary Treatment Upgrades.

The secondary treatment upgrades identified were noted to be triggered based on loading to both secondary clarifiers that was estimated to be exceeded when maximum month flows hit about 2.6 MGD, which was projected to be in 2027 based on the projections used in the 2022 Engineering Report. Based on projections performed under this Plan, the 2.6 MGD threshold isn't expected to be hit until 2038. However, it is recommended that the 2035 projection noted herein be utilized for when the secondary clarifiers are at capacity, as it is calculated to consider the Class II Reliability requirements of 50 percent capacity with the largest unit out of service.

The secondary treatment upgrades recommended in the 2022 Engineering Report were also intended to address nutrient removal. The trigger for the implementation of secondary treatment upgrades can be inferred to be whichever occurs first: secondary clarifier capacity issues (currently projected to be 2035), or a new NPDES permit from Ecology with nutrient limits more stringent than what the City can currently meet.

The plantwide pump and UV upgrades were focused on providing sufficient capacity for the projected peak hour flow. Peak hour flow projections have been reduced based on additional analysis performed, thus several of these items are no longer necessary: influent pumps, effluent pumps, and UV disinfection. 3W pumps were noted to be in need of replacement due to excessive wear as the pumps are oversized. These

pumps are being upgraded as part of the dryer project to address the significant increase in demand for plant water associated with those improvements.

SS 7.11.2 Proposed Improvements

Table SS 7-7 summarizes the necessary improvements or work, noting the estimated year by which any work will need to be completed.

Table SS 7-7
Summary of Proposed Studies and Improvements

Proposed Items	Estimated Year	Trigger
Solids Treatment and Handling Upgrades	2026	*Design in Progress*
PLC and MCC Upgrades	2028	Obsolescence
Secondary Treatment Upgrades	2030	Capacity - Secondary Clarifier Loading or Nutrient Limits
WWTP Re-rating Study	2030	Capacity – only needed if DOC lagoons brought offline before Secondary Treatment Upgrades
Admin Building Replacement or Upgrades	2035	Obsolescence
Centrifugal Blower Replacement	2040	Obsolescence

Chapter SS 8 Wastewater Reclamation and Reuse

SS 8.1 Reclaimed Water Evaluation

SS 8.1.1 Introduction

Wastewater reclamation and reuse can have benefits for a community's water supply and wastewater management. Production of reclaimed water for use in non-potable applications can be especially beneficial to public water systems facing water supply shortages through physical or water rights supply limitations. Reclaimed water can delay or eliminate the need for additional water rights or potable water system capital improvements. The utility may be able to generate additional revenue by selling reclaimed water. Water reclamation may also provide benefits to wastewater disposal requirements, where receiving water constraints preclude increased discharge into a surface water body. Beyond the benefits to utilities, reclaimed water may provide environmental and aesthetic benefits to the community, such as augmenting stream flow, creating wetlands habitat, or improving recreational opportunities.

The Washington State Legislature has declared there is "a primary interest in the development of facilities to provide reclaimed water to replace potable water in non-potable applications, to supplement existing surface and groundwater supplies, and to assist in meeting the future water requirements of the state." In accordance with the Revised Code of Washington (RCW), RCW 90.48.112, any plans or engineering reports submitted under RCW 90.48.110 must include consideration of opportunities for the use of reclaimed water. In this chapter, the feasibility of reclaiming effluent from the City's Wastewater Treatment Plant (WWTP) and reusing it within the City limits is assessed.

This chapter is an update to the 2015 City of Monroe Utility Systems Plan (BHC Consultants, LLC, 2015)[1] regarding reclaimed water and presents a brief evaluation of the feasibility of reclaiming effluent from the WWTP and reusing it in the City. Costs from the 2015 Plan were updated using a combination of ENR indices from July 2015 to May 2024 for Seattle, WA and engineering judgment on contingencies and engineering design and services during construction costs.

SS 8.1.2 Water Reclamation and Reuse Standards

In contrast to effluent disposal, water reclamation (i.e., reuse of treated effluent) is management of integrated water resources. In the State of Washington, any type of direct beneficial reuse of municipal wastewater is defined as water reuse or reclamation. Reclaimed water standards are defined in WAC 173-219, which was last updated in January 2018. These standards require coordination between the Washington State Department of Health (DOH), and the Washington State Department of Ecology (Ecology), with one acting as lead agency and the other as the supporting agency. The lead agency will be responsible for providing a reclaimed water permit. The Reclaimed Water Facilities Manual (Purple Book) was prepared by Ecology with assistance from DOH to provide guidance on the reclaimed water production. The State of Washington reclaimed water standards can be categorized into the four following areas:

1. Treatment Standards.
2. Allowable Uses of Reclaimed Water.
3. Use Area Requirements.

[1] BHC Consultants, LLC. (2015, April 2). *City of Monroe Utility Systems Plan Sanitary Sewer, Water and Stormwater.* BHC Consultants, LLC.

4. Operational and Reliability Requirements.

A key difference between water reuse and effluent disposal is in the level of reliability required within the treatment process, distribution, and use areas. The State of Washington's reuse treatment standards as per WAC 173-219-320 call for continuous compliance, meaning that the treatment standard must be met on a constant basis or the treated water cannot be used as reclaimed water.

SS 8.1.3 Treatment Standards

The State of Washington's current standards for municipal wastewater reuse has two classifications based on the type of treatment provided: Class A, and Class B. Class A+ is another designation identified in the WAC for direct potable reuse. Class A+ reclaimed water must meet Class A standards, with any additional criteria met on a case-by-case basis. The classifications are shown in Table SS 8-1.

Table SS 8-1
Reclaimed Water Treatment Standards

Reclaimed Water Classification	Biological Oxidation[1]	Coagulation	Filtration	Disinfection
Class A	Required	Required[2]	Required	4-log virus removal, 2.2 MPN/100 mL
Class B	Required	Not required	Not Required	23 MPN/100 mL

Notes:
1) Biological oxidation is defined as meeting the criteria established in WAC 173-219-330.
2) Coagulation can be omitted through the use of membrane filtration or a membrane bioreactor.

Additionally, the distribution system is required to maintain a minimum chlorine residual of 0.2 mg/L of free chlorine or 0.5 mg/L of total chlorine for both Class A and Class B reclaimed water.

SS 8.1.4 Allowable Uses of Reclaimed Water

Reclaimed water can be reused for a variety of applications based on its classification. The allowed uses per classification are presented in Table SS 8-2, as identified in Tables 8-1 and 9-1 of the Purple Book. Most of the listed uses have limited potential due to their relatively small quantities and seasonal nature. Two reuse methods that offer the potential for large volume reuse on a year-round basis are groundwater recharge and stream flow augmentation. The general basis for the reuse criteria is that when unlimited public access to the point of use is involved, Class A reclaimed water will be required. Therefore, for a water reclamation project to have a degree of flexibility as well as a potential for relatively unrestricted use, the reclaimed water should meet the Class A reuse standard.

Table SS 8-2
Reclaimed Water Classification Requirements for Allowed Uses

Potential Reclaimed Water Use	Class of Reclaimed Water Required	
	Class A	Class B
Irrigation of Non-Food Crops		
Trees and fodder, fiber, and seed crops and pastures access by milking animals.	Yes	No
Trees and fodder, fiber, and seed crops in pastures to which milking animals do not have access.	Yes	Yes
Uses with public contact.	Yes	No
Irrigation of Food Crops		
Irrigation of all food crops that do not undergo processing before consumption.	Yes	No
Irrigation - Orchards and vineyards.	Yes	Yes
Irrigation for frost protection of orchards.	Yes	Yes
Irrigation of food crops that undergo physical or chemical processing sufficient to destroy all pathogenic agents.	Yes	Yes
Landscape Irrigation		
Restricted access areas (e.g., cemeteries, freeway landscaping).	Yes	Yes
Open access areas (e.g., golf courses, parks, playgrounds, etc.).	Yes	No
Commercial and Institutional		
Toilet and urinal flushing.	Yes	No
Street washing, spray.	Yes	No
Exterior pressure washing of building and sidewalks.	Yes	No
Street sweeping, brush dampening.	Yes	Yes
Decorative fountains or water features.	Yes	No
Flushing/cleaning of sanitary sewers.	Yes	Yes
Washing of corporation yards, lots, and sidewalks.	Yes	No
Dust control (Dampening unpaved roads and other surfaces).	Yes	Yes
Dampening of soil for compaction (at construction sites, landfills, etc.).	Yes	Yes
Water jetting for consolidation of backfill around pipelines.	Yes	Yes
Aerial firefighting and prevention.	Yes	Yes
Interior fire hydrants or sprinkler systems.	Yes	No

Potential Reclaimed Water Use	Class of Reclaimed Water Required	
	Class A	Class B
Industrial		
Boiler feed-water.	Yes	Yes
Closed loop cooling – No creation of aerosols or other mist.	Yes	Yes
Cooling aerosols or other mist created (e.g., Use in cooling towers, Forced air evaporation, or spraying).	Yes	No
Process water - Without exposure of workers.	Yes	Yes
Process water - With exposure of workers.	Yes	No
Ship ballast.	Yes	Yes
Washing aggregate and making concrete.	Yes	Yes
Residential (Indoor)		
Toilet and urinal flushing.	Yes	No
Sprinkler systems in buildings.	Yes	No
Other indoor uses permitted by local plumbing codes.	Yes	No
Residential (Outdoor)		
Lawn and garden irrigation.	Yes	No

SS 8.1.5 Use Area Requirements

The reclaimed water standards establish criteria for siting and identifying water reclamation projects and their facilities. Water reclamation storage facilities, valves, and piping must be clearly labeled and no cross connections between potable water and reclaimed water pipelines are allowed. Additional setback requirements from public access or other environmentally sensitive areas may be required for each use; these are noted in Section 7.7 in the Purple Book.

SS 8.1.6 Operational and Reliability Requirements

The reclaimed standards establish operational and reliability requirements for water reclamation facilities and are provided in WAC 173-219-350. The most relevant requirements are listed below:

1. Minimum Class III operator for Class A, Minimum Class II for Class B.
2. Critical equipment and process failures must be signaled by an alarm.
3. Emergency storage/disposal in event of facility failure.
4. Operating records provided to DOH and Ecology.
5. No bypass reuse areas of untreated or partially treated water.
6. A standby power supply or long-term disposal or storage facilities.

SS 8.2 Potential for Reuse in the City of Monroe

SS 8.2.1 National Pollutant Discharge Elimination System (NPDES) Compliance

The Skykomish River reach near the City's effluent discharge meets all the applicable water quality standards. Ecology noted in the fact sheet for the current NPDES permit that the City's effluent discharge does not have a reasonable potential to cause exceedances of water quality standards in the Skykomish River. Furthermore, the most recent Effluent Mixing Zone Study Report (Kennedy/Jenks, 2021)[2] determined that the dilution factors for the effluent are higher than those used in the Ecology reasonable potential analysis, thereby further solidifying that additional or increased regulatory restrictions on the effluent discharge are not necessary. As a result, the City does not need to implement water reuse in order to reduce discharge into the Skykomish River to comply with potential changes in NPDES permit discharge limitations. Therefore, NPDES compliance issues are not a driver for wastewater reuse within the City.

SS 8.2.2 Offsets to Existing Water Rights

The City purchases potable water from the City of Everett. Per the City's *Water System Plan as part of the Utility System Plan update effort*, the City of Everett has projected that they have sufficient water rights to meet the future projections. The City's water supply from Everett is not limited except by the physical size of the interconnection, which is sufficient for the 20-year forecasted water demand. Therefore, the City does not anticipate a water rights shortage within the planning period, and water reclamation would not be needed to provide a water rights benefit.

SS 8.2.3 Substitution of Potable Water Uses

Potable water in the City is used for residential, commercial, industrial, municipal and irrigation uses. Substitution of potable water with reclaimed water for uses not requiring potable water quality reduces the demand on potable water and allows the City to serve additional customers without increasing potable water purchases from the City of Everett.

The most visible water application in the City that does not require potable quality water is landscape irrigation of City parks, schools and other facilities. Landscape irrigation of sites with public access requires Class A reclaimed water. Reclaimed water has not been supplied for irrigation of residential lawns in Washington to date due to maintenance and cross-connection control concerns. Another potential use for reclaimed water in the City is sanitary sewer flushing. Reclaimed water used for flushing sanitary sewers must at least meet Class B standards. Use of reclaimed water for landscape irrigation of public facilities and sanitary sewer flushing is further evaluated below.

Landscape Irrigation

Potential uses of reclaimed water include irrigation of City parks, school grounds and other public facilities. Sky River Park, adjacent to the WWTP, is currently irrigated with City potable water. Its proximity to WWTP would result in minimal water distribution costs and it would therefore be an ideal initial reclaimed water project. According to Table SS 8-2, Class A reclaimed water is required for irrigation of public areas with reclaimed water. The reclaimed water irrigation system could be later expanded to include other parks or schools.

[2] Kennedy/Jenks. (2021, December 13). *Final Effluent Mixing Zone Study Report.* Kennedy/Jenks.

Irrigation water usage at Sky River Park is monitored by a separate irrigation meter. During the three and one half month irrigation season the maximum water consumption is 70,000 gallons per day (gpd). Table SS 8-3 provides the projected irrigation demand based on irrigation meter data from 1998 to 2007.

Table SS 8-3
Sky River Park Landscape Irrigation Demand[1]

Parameter	Irrigation Water Demand[1]
Maximum Annual Demand (gal/year)	4,500,000
Maximum Day Demand (gal/day)	70,000
Typical Irrigation Season Length (months)	3.5

Note:
1) Irrigation water demand based on irrigation water meter records from 1998 to 2007.

Sanitary Sewer Flushing

Water jet cleaning of sanitary sewers requires about 4,000-gallons per 1,000 feet of sewer pipe. As further described in Chapter SS 9 - Operations and Maintenance Program, it is recommended that gravity sewers be cleaned by flushing at a frequency of once every four years. The City has approximately 295,000 linear feet of gravity sewers, and about 73,750 linear feet should be flushed each year, resulting in a water demand of 295,000 gallons per year.

The sewer flushing water demand is much lower than the landscape irrigation demand. It will be most cost-effective to operate the water reclamation treatment processes only during the irrigation season. If the flushing program is continuous throughout the year, about 21,510 linear feet would be flushed during the three and one half month irrigation season. Therefore, 86,000 gallons per year of reclaimed water could be used for sewer flushing if reclaimed water production is restricted to just three and one half months per year.

Recommended Uses

Landscape irrigation of Sky River Park and sanitary sewer flushing are the recommended uses of reclaimed water in the City. Class A reclaimed water is required for irrigation of public areas with reclaimed water. The annual reclaimed water demand would be 4,586,000 gallons, during the three and one half month irrigation season.

SS 8.3 Conceptual Design

SS 8.3.1 Production of Reclaimed Water

The existing WWTP provides secondary wastewater treatment for discharge to the Skykomish River through an NPDES permit. The maximum day reclaimed water demand represents a small proportion of the WWTP capacity. As production of reclaimed water is more expensive than secondary effluent, it is recommended that a side stream Class A water reclamation process be developed. As identified in the 2022 WWTP Engineering Report (Kennedy/Jenks, 2022)[3], a portion of the primary effluent will be diverted from the existing secondary treatment process to a new side stream process utilizing membrane bioreactors

[3] Kennedy/Jenks. (2022, August). *WWTP Engineering Report 2022 Final.* Kennedy/Jenks.

(MBR) to both increase capacity to meet future growth projections and overall level of treatment to meet pending nutrient limits. All or a portion of the effluent from this side stream process could be treated to Class A reclaimed water by being diverted from the existing ultraviolet (UV) disinfection system to a separate UV disinfection system designed to meet the higher level of disinfection required. This side stream disinfection process would be operated during the irrigation season to produce Class A reclaimed water. At other times, and in case Class A reclamation standards are not met, all effluent would be disinfected through the existing UV system and discharged to the river. Park irrigation would not be a critical water use, so irrigation could be temporarily halted in case of treatment process upset. Because the District has a NPDES permit for surface water discharge (alternate disposal system), reclaimed water system storage or bypass storage is not required, except to the extent that storage may be needed to manage the irrigation demand.

The separate UV disinfection system would be sized to provide the maximum day reclaimed water demand, with a capacity of 65 gpm (94,000 gpd). As per WAC 173-219-320, allowable treatment method for Class A reclaimed water includes biological oxidation, followed by membrane filtration and disinfection, demonstrating at least a 4-log virus removal or inactivation. The unit processes are described in detail below:

Oxidation

The continuous oxidation requirement for reclaimed water will be met with the future side stream MBR process, which will utilize existing Aeration Basin No. 3 for biological treatment to oxidize the wastewater. The oxidation process meets the reclaimed water reliability requirements by having alarms and standby equipment (backup blowers and pumps).

Membrane Filtration

The 2022 WWTP Engineering Report identifies the design of a future side stream MBR process for secondary treatment upgrades. The membranes would be retrofitted into the existing submerged biological contactor (SBC) tanks that are no longer in service, allowing them to be modified and repurposed. The side stream MBR process would be sized to treat at least 1.5 MGD of wastewater. A new MBR support building would be constructed to house supporting equipment including permeate pumps, scour blowers, and the membrane chemical cleaning systems.

The reliability requirement will be met with a redundant MBR tank and automatically actuated long-term disposal provisions (side stream shutdown with NPDES effluent discharge).

UV Disinfection

As per Guidelines for Drinking Water and Water Reuse, published by the National Water Research Institute (NWRI) when using membrane filtration as part of the treatment process train upstream of UV disinfection, the following performance criteria shall apply:

- The design UV dose shall be at least 80 mJ/cm2 under maximum day flow.
- The effluent turbidity shall be equal to or less than 0.2 NTU 95 percent of the time, not to exceed 0.5 NTU.
- The filtered effluent UV transmittance shall be 65 percent or greater at 254 nm.

The existing UV reactors have a total capacity of 10 MGD, and the design UV dose is 25 millijoules per centimeter squared (mJ/cm2) at a minimum UV transmittance of 55%. The existing UV system cannot meet the disinfection requirements for reclaimed water. A separate system needs to be provided to meet the requirements for producing Class A reclaimed water. The reclaimed water UV disinfection system will be a closed conduit, low-pressure, high-intensity UV system. A closed conduit system will allow the MBR permeate pumps to convey flow through the disinfection system to the reclaimed water distribution system and minimize space requirements. A minimum of two UV reactors shall be installed thereby providing reliability in the disinfection system for reclaimed water production.

Alarms and Telemetry

The use of reclaimed water for irrigation in open access areas demands a higher level of quality control than normal WWTP operations. Continuous water quality monitoring and associated alarms will need to be installed to notify staff if the oxidation, filtration, or disinfection systems fail, or if the reclaimed water quality falls below an acceptable level. In the event an alarm is signaled, the reclaimed water system would shut off and 100 percent of the WWTP flow would be discharged to the Skykomish River while still meeting all NPDES permit requirements.

SS 8.3.2 Water Reuse System

Irrigation of public access areas, such as parks, should be performed at the time when the risk of public contact is least (i.e. overnight). Assuming a six-hour irrigation period (11 p.m. to 5 a.m.), the peak irrigation demand is 194 gpm (70,000 gpd/6 hr). Therefore, it is assumed an initial reclaimed water system would be sized for a capacity of 200 gpm. The UV disinfection system will be adequately sized to accommodate the peak irrigation demand and major modifications to the existing treatment processes are not required.

Reclaimed water storage at the WWTP may or may not be required, depending on whether the lowest influent flows during the irrigation period would be enough to meet the instantaneous reclaimed water demand and the highest flows during this period would not exceed the capacity of the existing processes to treat to the Wastewater Reclamation Standards. If not, onsite storage may be needed for equalization and management of reclaimed water flows to meet instantaneous demands. Any flow in excess of the demand could simply be discharged to the Skykomish River.

A reclaimed water pumping station would convey reclaimed water from the storage tank to the use areas. The reclaimed water pumps (one duty, one standby) would be rated at 200 gpm at 60 psi total dynamic head. The motor horsepower would be approximately 25 hp.

A tanker truck filling station could be located at the WWTP to fill sewer flushing trucks with reclaimed water. Reclaimed water would also be pumped to the Sky River Park irrigation system. The existing potable water connection to the irrigation system could be equipped with an acceptable backflow prevention device and retained to provide backup irrigation water to the park.

SS 8.3.3 Operation and Maintenance (O&M) Costs

The estimated annual operation and maintenance cost for the reclaimed water system is $28,000 per year. The cost is the O&M cost for operating the side stream UV disinfection system three and one half months per year and includes the reclaimed water pumps and storage tank. Park irrigation labor or maintenance is not included, as that is already a requirement with the current irrigation system.

SS 8.4 Estimate of Probable Project Costs

Table SS 8-4 provides a summary of the estimate of probable project costs for the Class A water reclamation process, distribution, and operation and maintenance. Since the MBR system will be installed as part of the Secondary Treatment upgrades in the WWTP, the reclaimed water side stream process cost includes the cost for installation of Class A UV disinfection system and the associated Electrical/ Instrumentation costs. The detailed project cost and operations and maintenance cost is presented in Appendix SS-D.

Table SS 8-4
Reclamation Process OPCC

Item	Opinion of Probable Project Cost[1]
Reclaimed Water Side Stream Process	$ 1,021,000
Storage and Distribution System	$ 1,568,000
Annual O&M Costs[2]	$ 28,000

Notes:
1) Assumes 30 percent contingency, 40 percent for engineering, and 9.4 percent sales tax. No costs are included for financing, easements, right-of-way, or property acquisition.
2) Assumes operation three and one half months per year. Does not include part irrigation labor and maintenance.

SS 8.5 Wastewater Reuse Potential

A review of potential customers and reuse sites within the City was performed based on the above water reclamation standards and associated requirements.

Production of reclaimed water is financially feasible if the cost of producing and distributing reclaimed water is less than the revenue received from selling reclaimed water and/or the cost of using potable water. Production of reclaimed water may also be financially feasible if it delays or eliminates capital expenses related to developing new water sources or meeting stricter standards for effluent discharge to surface water. If wastewater reclamation becomes economically feasible due to an increase in demand, a water right impairment assessment will need to be performed. Water right impairment refers to an interruption or interference in the availability of water, or degradation of the quality of water, caused by decreasing or ceasing a wastewater discharge in order to reclaim the water.

For the City to produce reclaimed water that allows varied potential beneficial uses (such as irrigation), a separate UV disinfection system must be installed following the planned future construction of the side stream MBR process. The City does not have any immediate goals for production of reclaimed water but would like to produce reclaimed water in the future with the side stream MBR process identified in the 2022 WWTP Engineering Report.

THIS PAGE INTENTIONALLY BLANK.

Chapter SS 9 Operations and Maintenance Program

SS 9.1 Introduction

The operations and maintenance (O&M) activities performed by the City to ensure performance and reliability of the sanitary sewer (sewer) system and wastewater treatment plant (WWTP) are summarized in this Chapter. City personnel maintain approximately 6.5 miles of force mains, 55.9 miles of gravity sewers, ten pump stations, and a secondary WWTP implementing a Modified Ludzack-Ettinger process with a 30-inch diameter outfall to the Skykomish River. Chapter SS-4-Existing Wastewater Facilities provides a detailed summary and descriptions of the sewer facilities operated and maintained by City staff. The O&M division operates and maintains the City's sewer system. The department currently is staffed by the following key positions:

- Public Works Director.
- O&M Division Manager.
- O&M Supervisor.
- Public Works Maintenance Worker II.
- WWTP Operator III/Lab Analyst.

The organization and staffing of the Public Works Department including O&M staff is included in Combined Element Chapter 2 – Introduction.

SS 9.2 City Management and Personnel

The City is governed by a mayor-council, non-partisan form of government where the City Council serves as the Legislative Branch and the Mayor as the Executive Branch. The Public Works Director oversees the Public Works Department. The Public Works Department is responsible for the design, construction, operations, maintenance, and management of the City's sewer system. The Design and Construction division is primarily responsible for the design and management of City funded capital improvement projects for the sewer system. The day-to-day operations for all of the City's utility systems are managed by the O&M division.

The City encourages its employees to obtain certification and training for skills relevant to operating and maintaining the sewer system. All staff must, at a minimum, have a driver's license and a high school diploma or GED. In addition, the City provides employees with opportunities for training and certification relative to their position and function. Operator training is an important component in maintaining a safe and reliable sewer collection system. At a minimum, all personnel performing sewer system related duties should receive training in the following areas:

- Traffic flagging.
- Trenching and shoring.
- Confined space.
- First aid.
- Electrical hazards.
- Asbestos cement pipe safety.

- Occupational Safety and health Administration (OSHA) Plus program.

A summary of the operations and maintenance staff and their certifications are identified in Table SS 9-1.

Table SS 9-1
City Operations Division Personnel Certifications

Employee Name	Job Title	Certification	Certification Number
Zach Bowman	Wastewater Treatment Plant Operator	Wastewater Treatment Plant Operator	WWTPO #9301
Theresa Davis	Wastewater Treatment Plant Operator	Wastewater Treatment Plant Operator	WWTPO #6918
Colson Crim	Wastewater Treatment Plant Operator	Wastewater Treatment Plant Operator	WWTPO #9575
Tyler Long-Scott	Wastewater Treatment Plant Operator	Wastewater Treatment Plant Operator	WWTPO #9020
John Lande	Water/Wastewater Manager	Wastewater Treatment Plant Operator	WWTPO #5966
Donovan Sheppard	Wastewater Treatment Plant Supervisor	Cross Connection Control Specialist	WWTPO #6472 CCS #7520

SS 9.3 Major System Components and Routine System Operation

Major components of the City's collection system are shown in Figure SS 4-1. A detailed inventory of system components is included in Chapter SS-4-Existing Wastewater Facilities. Routine system operations include checking pump stations, daily monitoring of the Supervisory Control And Data Acquisition (SCADA) system, high-pressure cleaning, Closed-Circuit Television (CCTV) inspection, assisting engineering, and responding to customer inquiries.

Each major system component has a hardcopy O&M manual. The City has hardcopy manuals for its pump stations as well, which are located at the O&M facility. Maintenance procedures for hydro-cleaning, CCTV inspection, pump station inspections, pump station troubleshooting and repair, and manhole rehabilitation are done per manufacturer recommendation and are tracked on the City's utility management system.

SS 9.4 Operations and Maintenance Activities

Typical operations and maintenance activities, including preventive maintenance and corrective actions, are summarized in this section. A summary of recommended maintenance standards for the sewer system is provided in Table SS 9-2.

Table SS 9-2
Recommended Collection System Maintenance Standards

Maintenance Task	Quantity or Length	Recommended Standard[1]
Pump Station Inspections	10	Inspected weekly; maintenance is performed annually[1].
Gravity Sewer CCTV Inspections	294,986 LF	Inspected on a three to five-year rotation, or as needed.
Gravity Sewer Cleaning	294,986 LF	Cleaned on a three to five-year rotation, or as needed.
Force Main Flushing	34,071 LF	Annual inspection; flushing[2]

Notes:
1) Recommendation based on EPA 832-F-00-073, Wastewater Technology Fact Sheet, Sewers, Lift Station, September 2000.
2) Recommendation based on EPA 832-F-00-071, Wastewater Technology Fact Sheet, Sewers, Force Main, September 2000.

Gravity sewers are flushed and inspected with CCTV on five-year rotations or as needed. During any gravity line flushing, the manholes associated with the lines being flushed are also inspected and cleaned, as needed. Approximately 75 percent of the system has been inspected with CCTV at least once in the last 25 years. Currently there is no standard for force main flushing. Whenever there is an unforeseen increase in force main pressure, that force main is flushed regardless of the maintenance schedule.

SS 9.4.1 Pump Stations

City staff currently monitor each pump station on a daily basis, recording pump run hours and checking for alarms. Pump stations are field inspected twice per week by operations and maintenance staff during the course of normal maintenance activities, which include but are not limited to general facility maintenance, visual wet well inspection, and manual pump checking.

The weekly Inspection consists of logging pump run hours, Amps, Voltage, flow (GPM) for each pump and weekly total station flow. Wet well cleaning and pressure washing is performed on an as-needed basis. This cleaning interval serves to remove deposits that may readily obstruct the pumps and also extends pump service life. Pump station maintenance appears sufficient, and it is recommended that City's maintenance staff continue at this level.

SS 9.4.2 Force Mains

The City does not routinely inspect force mains. It is recommended that force mains are inspected on an annual basis in accordance with EPA 832-F-00-071 and should be flushed when pressure increases or during other reported obstructions.

SS 9.4.3 Gravity Sewers and Manholes

Preventive maintenance for gravity sewer lines includes programs for inspection and cleaning. Inspections should include routine visual observation and documentation of manholes and a program of CCTV inspection of sewer pipes. Cleaning and inspection programs should identify the majority of problems so that they may be repaired in the maintenance or capital improvement programs, instead of resulting in a

failure or overflow. Currently, the gravity sewers are inspected on a five-year rotation period or when a pipe blockage occurs.

Gravity sewer lines are currently cleaned by flushing or jetting on a routine 5-year cycle. More problematic or critical lines and flat-sloped pipes are cleaned as needed. The goal of the cleaning and inspection program is to identify the majority of problems so that they may be addressed in the maintenance or capital improvement programs, thereby mitigate the risk of gravity sewer line failures and sewer surface overflows.

SS 9.4.4 Wastewater Treatment Plant

The WWTP is operated and maintained in accordance with the WWTP O&M Manual, a copy of which is kept on site. This O&M Manual addresses WAC 173-240-080 requirements and is written for certified treatment plant operators who are familiar with wastewater treatment and process theory. The O&M Manual includes manufacturers' technical information and O&M Manual for each piece of equipment. This system is the foundation for scheduling and documenting preventative maintenance. All routine preventative maintenance such as oil changes, lubrication, and exercising of infrequently used equipment and corrective maintenance performed are chronicled in this record. The WWTP operators also use the O&M Manual in conjunction with the following documents to operate, troubleshoot, and maintain the plant:

- WWTP Record Drawings.
- Manufacturers' O&M Manuals containing manufacturer recommended procedures, maintenance schedules, and recommended spare parts lists for each piece of equipment.
- Project data submittals and shop drawings for all equipment used.

The plant staff conducts equipment repairs and rebuilds in-house. More complex tasks such as motor rewinding, electrical or instrumentation modifications are outsourced to a third party. Critical equipment that could affect effluent quality has redundant and backup equipment ‘on-the-shelf’. This redundancy allows the City to respond to equipment failures without effluent violations. With the backup equipment available, the City currently does not routinely replace old equipment until the maintenance efforts become burdensome and replacement is the prudent decision.

SS 9.5 Sanitary Sewer Overflow Response Plan

The Sanitary Sewer Overflow (SSO) Response Plan describes the procedures that the staff follows in the event of an SSO. The plan is designed to ensure compliance with state and federal mandates and ensures that staff are aware of the appropriate response actions to take for a given situation. The SSO Response Plan includes emergency response actions designed to contain, mitigate, and clean up residuals from an overflow event. The objectives of the SSO Response Plan include:

- Protect public health and the environment.
- Ensure compliance with regulatory requirements.
- Protect public and private property.
- Protect City staff.
- Protect City-owned facilities.
- Provide excellent customer service.

The City would immediately report to Ecology and the local jurisdictions in case of collection system overflows as identified in the NPDES permit included in Appendix SS-A. The City has also developed a Standard Operating Procedure to execute in the event of unauthorized discharges which is included in Appendix SS-H.

SS 9.6 Staffing Assessment

The City's Public Works Department assigns 10.67 Full Time Equivalents (FTEs) to perform sewer system work. Of the total 10.67 FTEs funded by the sewer utility, 6 FTEs are assigned to the WWTP Division, and the remaining 2.16 are assigned to the O&M Division, and 2.51 are assigned to the Design and Construction Division.

The WWTP is staffed eight hours/day, five days/week. On weekends and holidays personnel are assigned to visit the plant and take samples and do laboratory work to ensure compliance and proper plant operations. Weekend shifts are typically two to three hours in duration.

Based on the 2023 AWWA Utility Benchmarking: Performance Management for Water and Wastewater report[1], sewer systems range nationally from a 25th percentile of 0.13 average MGD of wastewater processed per FTE to a 75th percentile of 0.22 average MGD of wastewater processed per FTE with a median value of 0.17 average MGD of wastewater processed per FTE. The City's 0.15 average MGD of wastewater processed per FTE, is in close alignment with the median value of 0.17 MGD according to the AWWA benchmark.

Due to the age and condition of the City sewer collection system an increase the frequency of Gravity Sewer CCTV Inspections as well as Gravity Sewer Cleaning (Table SS 9-2) would be beneficial for the purposes of identifying and prioritizing capital replacement projects due to obsolescence, and in decreasing instances of sewer service interruption due to blockage. Implementation of these programs is estimated to require 1.25 FTE. If added, the City's FTE ration would decrease from 0.15 average MGD of wastewater processed per FTE to 0.14.

SS 9.6.1 WWTP Staffing

The estimation of staffing hours required to operate a WWTP similar in size and process to the City's was developed based on the spreadsheet tool from the EPA Document No. 832R73100[2]. The tool requires the identification of the major unit processes by type, average day maximum month flow, hours per day of sludge dewatering and the assumed productive hours per staff per year to best represent the utility of interest. The tool uses industry averages and typical values for labor requirements per process to estimate the total number of labor hours per year that should be expected to operate and maintain a WWTP of similar size. The total estimated labor hours per year required to operate the City's WWTP was 8,450 hours. Assuming a five day work week, 30 days for holidays, sick, and vacation, and an eight hour workday, the total hours per worker per year is estimated at 1,840. Based on these approximations, the City's WWTP requires five FTEs to operate the plant. Therefore, based on the available staffing of six FTEs identified by the City, the City is adequately staffed at WWTP in current conditions and for the foreseeable future.

[1] American Water Works Association (AWWA). (2023). *AWWA Utility Benchmarking: Performance Management for Water and Wastewater.* Denver, CO: American Water Works Association.

[2] USEPA Publication MO-1 dated March 1973 entitled "Estimating Staffing for Municipal Wastewater Treatment Facilities". USEPA.

SS 9.7 Recommended O&M Improvements

The City is proactive in managing O&M procedures, performing regular maintenance and in responding to critical maintenance issues. The 2023 AWWA report metrics presented in Section 9.7 conclude that the City's O&M Division may be understaffed. Additionally, City operations staff have noted a need for additional staff to adequately operate and maintain the sewer system. For these reasons and the efficient current staffing of the sewer system, the City should evaluate options to increase sewer system staffing over the next three years to operate and maintain the sewer system to the necessary level of service as the system customer base grows.

Chapter SS 10 Collection System Facilities Design and Construction Standards

SS 10.1 Overview

The City manages and operates their sewer system in accordance with state, local, and federal regulations and the Monroe Municipal Code (MMC). The policies and standards described in this Chapter provide a framework for the planning, design, operation, and management of the sewer system, to maintain the desired level of service to sewer utility customers. The policies herein are limited to the sewer system and its design and operation.

While the City has discretion in setting performance and design criteria and standards for its sewer system, the criteria must also meet or exceed the minimum standards for public sewers as established by the Washington State Department of Ecology (Ecology) in Revised Code of Washington (RCW) RCW 90.48 (Water Pollution Control), RCW 90.52 (Pollution Disclosure Act of 1971), and RCW 90.54 (Water Resources Act of 1971). The criteria focus on planning, design parameters, and other details that have been developed to establish consistency and to ensure that adequate levels of service are provided throughout the system. The criteria also provide the planning process with measuring tools to identify areas of the existing system that require improvement.

SS 10.2 Environmental Checklist and Permits

The State Environmental Policy Act (SEPA) of 1971, RCW 43.21C, requires that all sewer system plans be accompanied by the appropriate environmental document. A SEPA checklist for this Plan and can be found in Appendix SS-I. The SEPA checklist addresses the Capital Improvement Program (CIP) on a planning level (i.e. as a non-project action). Each individual project, both CIP and developer projects, will undergo subsequent project-specific environmental review as design and engineering is completed. Individual projects will also require construction and use permits from the City and possibly from county, state, and federal regulatory agencies.

SS 10.3 Pretreatment

Pretreatment systems may be required to reduce, eliminate or alter the nature of a pollutant's properties prior to discharging to the public sewer collection system. "Pretreatment standards" means any pollutant discharge limitations including categorical standards, state standards, and limits in MMC Chapter 13.10.080 applicable to the discharge of nondomestic wastes to the treatment plant. Pretreatment systems include grease traps, interceptors, oil/water separators and other units to treat metals, solvents, fats, oils, grease, excessive BOD or TSS, and other constituents. Pretreatment systems are to be installed in compliance with Chapter 13.10 of the City's MMC.

SS 10.4 Project Review Procedures

Sewer system projects are reviewed by the City's Engineering Department, the City's Public Works Department, and when necessary, Monroe Fire District #3.

SS 10.5 Policies and Requirements for Outside Parties

All projects, whether internal or proposed by outside parties, are required to comply with the design and construction standards discussed here.

SS 10.6 Design Standards

The City sewer system improvements shall be designed and constructed in accordance with the following:

- City Sewer Standards, as follows:
  - Title 13 of City's MMC: https://monroe.municipal.codes/MMC/13
  - The City's Standard Specifications and Details: https://monroewa.gov/629/Design-Standards
- Ecology's Criteria for Sewage Works Design (Orange Book),
- Washington State Department of Health (DOH) requirements,
- U.S. Environmental Protection Agency (EPA) requirements,
- Washington State Department of Transportation (WSDOT) Standard Specifications for Road, Bridge, and Municipal Construction, and
- The requirements under WAC 173-240 - Submission of Plans and Reports for Construction of Sewer Facilities.

In addition, per WAC 173-240-030(5), if the City receives general sewer plan and standard design criteria approval from Ecology, then engineering reports, plans, and specifications for sewer line extensions do not require an additional approval process. However, Ecology's approval is necessary for sewer line extensions if either:

1. the proposed sewers or lift station involve installation of overflows or bypasses; or
2. the proposed sewers or lift stations discharge to an overloaded treatment, collection, or disposal facility.

Also, if sewer system piping or lift station projects are funded with grants or loans from Ecology, then engineering reports, plans, and specifications shall obtain approval by Ecology.

These requirements are intended to meet or exceed the design standards referenced in WAC 173-240. This material is intended to meet the requirements set forth by Ecology and following the approved procedures and standards, the City is provided a waiver from the requirement of Ecology's approval of individual collection and conveyance system projects. Wastewater treatment facilities projects may require an engineering report per WAC 173-240-060.

SS 10.7 Construction Standards

All sewer system improvements are constructed in accordance with the City's Municipal Code Chapters 13.08 and 13.10, Ecology Criteria for Sewage Works Design, applicable standards of the WSDOT/APWA Standard Specifications, and the City Public Works Design and Construction Standards.

These requirements are intended to meet or exceed the construction standards referenced in WAC 173-240. This material is intended to meet Ecology requirements and following the approved procedures and standards, the City is provided a waiver from Ecology approval of individual collection and conveyance system projects.

SS 10.8 Construction Certification and Follow-Up Procedures

All sewer system improvements constructed within the City Sewer Service Area for which the City will assume responsibility are inspected by the Public Works Department's Utilities Inspector and overseen by a professional engineer licensed in the State of Washington in accordance with the City's Municipal Code Chapters 13.08 and 13.10, Ecology Criteria for Sewage Works Design, Division 7 of the WSDOT/APWA Standard Specifications, and the City Public Works Design and Construction Standards. Water quality samples are taken by City employees and tested at the City's accredited laboratory.

The inspector annotates construction plans as construction progresses. At the completion of construction record drawings are prepared using the marked-up plans and field verified. Project records are retained in accordance with State of Washington Archives and Records Management Division Guidelines. After completion of construction and acceptance of the improvement a Declaration of Construction Completion is completed per WAC 173-240-090.

SS 10.9 Developer Sewer System Extensions and Upgrades

Sewer system extensions are allowed to provide sewer service within the City's sewer service area and Urban Growth Area (UGA) if the development is consistent with adopted development polices and all sewer utility policies and criteria.

Developers are required to pay the City to analyze the impacts of the development on the existing sewer system. If the City makes a determination that the development's impact to the existing sewer system requires upgrades, the upgrades shall be made at the cost of the developer.

The City may require the developer to oversize new sewer infrastructure to accommodate future growth. The developer may recoup the additional cost for the oversized infrastructure using latecomer's agreements or other mechanisms, including contributions from the City, or discounts to their general facility charges.

SS 10.10 Review of Sewer Use Ordinance

The sewer use ordinance is documented in Chapter 13.08 of the City's Municipal Code.

SS 10.10.1 Municipal Code 13.10.080

The daily maximum allowable discharge limits for Arsenic, Nickel, Zinc and other heavy metal pollutants are illustrated in Table SS 10-1.

Table SS 10-1
Maximum Allowable Discharge Limits for Pollutants

Metal	Mg/L
Arsenic	0.384
Cadmium	0.285
Copper	0.780
Lead	0.799
Mercury	0.003
Nickel	2.12
Selenium	0.165
Zinc	4.020
Molybdenum	0.160

The local limits for chromium should be introduced based on a comparison with local limits adopted by a limited number of other cities in Western Washington as summarized in Table SS 10-2. Guidance Manual for Developing Local Discharge Limits[1] is available as a reference published by Ecology for the development and updating of local limits as well as other issues relative to industrial discharges.

Table SS 10-2
Comparison of Selected Industrial Pretreatment Limits

City	Daily Maximum Concentration (mg/L)			
	Chromium	Nickel	Zinc	Source
Monroe	-	2.12	4.02	Monroe Municipal Code 13.10.080
Everett	5.0	2.83	4.0	Everett Municipal Code 14.40.080
Marysville	1.47	1.48	1.67	Marysville Municipal Code 14.20.080
Lynden	2.50	1.70	2.6	Lynden Municipal Code 13.12.140.G
Ferndale	2.80	1.7	2.6	Ferndale Municipal Code Chapter 13.31.090
Anacortes	2.75	2.5	5.0	Anacortes Ordinance 2282
Sedro Woolley	2.77	3.98	2.61	Sedro Woolley Municipal Code Chapter 13.24.080
Arlington	1.47	1.48	1.67	Arlington Municipal Code Chapter 13.36.080

SS 10.11 Septic to Sewer Conversion

All homes and businesses within 200 feet of a sewer main that have failing on-site systems and are within the UGA shall connect to that main in compliance with WAC 246-272A-0025.

[1] Washington State Department of Ecology. (2011; rev 2024). *Publication No. 11-10-056: Guidance Manual for Developing Local Discharge Limits (Historical).* Lacey, WA: Washington State Department of Ecology.

City Code 13.08.030 states, “At such time as a public sewer becomes accessible to property served by a private sewage disposal system, a direct connection shall be made to the public sewer within 60 days in compliance with this chapter, and any septic tanks, cesspools, and similar private sewage disposal facilities shall be abandoned and filled with suitable material.

THIS PAGE INTENTIONALLY BLANK.

Chapter SS 11 Capital Improvement Program

SS 11.1 Introduction

This Chapter provides a summary of specific projects and improvements the City plans to implement, plan, and budget for over the course of this Plan's planning horizon. These projects are derived primarily from the analyses included in Chapter SS 6 – Sanitary Sewer System Analysis and Chapter SS 7 – Wastewater Treatment Plant, a review of infrastructure age, and discussions with City staff. Other non-project recommendations can be found throughout the preceding chapters. Each project is accompanied by a planning level opinion of probable project cost (OPPC). The City reviews the Capital Improvement Program (CIP) annually to adjust project priority, cost, and to refine project scope as part of the City's continuous capital improvement planning effort.

Generally, wastewater collection, pump station and wastewater treatment plant (WWTP) improvement projects were divided into the following categories:

- Capacity: Improvements classified as insufficient in capacity are determined based on the capacity of the infrastructure.
    - The conveyance system deficiency criteria is outlined in Chapter SS 6 – Sanitary Sewer System Analysis Section SS 6.4.3.
    - For WWTP projects, capacity-based needs were evaluated and documented in Chapter SS 7 – Wastewater Treatment Plant.
- Obsolescence: Improvements classified as obsolete are based on the age and condition of pump stations, mechanical and electrical equipment, structures and piping. The City has assessed priority replacement obsolescent piping that is mapped in Figure SS 11-1.

When possible, system improvement projects will be coordinated with other utilities to minimize disruption and reduce associated costs such as road and surface restoration.

SS 11.2 Capital Improvement Plan

The City CIP was divided into 6- and 20-year planning periods. Developer improvements are expected to be privately funded and therefore are not listed here. Chapter SS 12 – Sanitary Sewer Financial Plan includes a more detailed study into the funding and affordability of this capital plan.

The 6- and 20-year CIP improvements are outlined Table SS 11-1 and Table SS 11-2; Figure SS 11-2 identifies these CIPs in the context of the sanitary sewer service area. Appendix SS-J includes CIP sheets showing project location, description, costs, and additional considerations. Table SS 11-3 includes the project description for the 6-year CIP lift station projects and other CIP projects that weren't included in the CIP one sheets. Values shown are in future dollars that includes an inflation rate of 3.0 percent for years one through six extrapolated from 2024-dollar valuations. These projects have been defined only to a preliminary level of design. Major capital projects will require further definition and refinement as part of the design process.

The 20-year CIP project costs for this Plan include Washington State sales tax, a construction contingency, and considerations for planning, engineering design and permitting services as well as an allowance for engineering services during construction (including inspection and observation services). Construction costs were estimated from bid results for similar projects and escalated to 2024 costing. Costs associated with financing, easements, right-of-way, or property acquisition are not included, unless specifically noted. Future values presented include a 3.0 percent inflation for years one through six and a 2.4 percent inflation rate for years seven through 20. Actual costs will differ from the opinions of probable project costs (OPPC). Volatility in the bidding climate, the number of contractors bidding on a project, and their approach to bidding and completing the work will impact actual project costs.

The 20-year OPPC for SS-102, SS-103 and SS-104 identified in Table SS 11-1 are carried forward from the 2015 Utility Plan and have been adjusted using Engineering News Record Construction Cost Index (ENR-CCI). The CIP SS-101 and SS-107 projects shown in Table SS 11-1 are identified by the City for future projects for pipe replacement and WWTP needs respectively, during the 20-year planning horizon.

P:\Mapping\Maps_Generated\Monroe\projects\22-10808.00 - MIG - Monroe Comprehensive Plan\003 - Sanitary Sewer Plan\maps\Obsolescent_Piping.aprx 9/6/2024 rjones

Credits: Esri, HERE

Sanitary Sewer System: City of Monroe 2023 and 2024

Snohomish County base data 2023

Data sources supplied may not reflect current or actual conditions. This map is a geographic representation based on information available. It does not represent survey data. No warranty is made concerning the accuracy, currency, or completeness of data depicted on this map. BHC Consultants LLC., assumes no responsibility for the validity of any information presented herein, nor any responsibility for the use or misuse of the data.

N

0 1,000 2,000 4,000 Feet

Priority Replacement of Obsolescent Piping

Utility System Plan - Sanitary Sewer
City of Monroe, Washington
September 2024

Figure

SS 11-1

COPYRIGHT © 2024 BHC CONSULTANTS LLC., ALL RIGHTS RESERVED

THIS PAGE INTENTIONALLY BLANK.

Cate's PS
SS-8

Valley View PS
SS-7

Beaton PS

Fryelands PS

Sawyer PS

S. Fryelands PS
SS-11

SS-1

SS-3

SS-4

SS-2

SS-6

SS-20

SS-5

WWTP

SS-13 through
SS-19 at WWTP

Park Place PS

Old Owen PS
SS-12

Fox Meadows PS
SS-10

West Main PS
SS-9

Compost Facility

LAKE TYE

SKYKOMISH RIVER

SLOUGH

HASKELL SLOUGH

Legend

- Pump Station
- Pump Station CIP
- Wastewater Treatment Plant
- Force Main
- Sewer Main
- City of Monroe
- UGA Boundary
- Sanitary Sewer Service Area Boundary
- Water Body

City, UGA, and Sewer System: City of Monroe 2024

Snohomish County base data 2021

Data sources supplied may not reflect current or actual conditions. This map is a geographic representation based on information available. It does not represent survey data. No warranty is made concerning the accuracy, currency, or completeness of data depicted on this map.
BHC Consultants LLC., assumes no responsibility for the validity of any information presented herein, nor any responsibility for the use or misuse of the data.

N

0 0.25 0.5 1 Miles

Capital Improvement Program

Utility Systems Plan - Sanitary Sewer
City of Monroe, Washington
September 2024

Figure
SS 11-2

COPYRIGHT © 2024 BHC CONSULTANTS LLC., ALL RIGHTS RESERVED

P:\Mapping\Maps_Generated\Monroe\projects\22-10808.00 - MIG - Monroe Comprehensive Plan\003 - Santiary Sewer Plan\maps\Fig SS 11-2 CIP Project 11x17 RJ.mxd 9/4/2024 rjones

THIS PAGE INTENTIONALLY BLANK.

Table SS 11-1
CIP Opinion of Probable Project Costs: Years 1-6 (2025-2030)

CIP No.	Project Description	Capacity	Obsolescence	Opinion of Probable Project Cost[1, 2]	Year
Collection and Conveyance					
SS-1	$500,000/yr. Pipe Replacement Projects-Short Columbia Street		☑	$ 1,550,000	2025
SS-2	$500,000/yr. Replacement Projects - South Sams Street		☑	$ 210,000	2025
SS-3	$500,000/yr. Pipe Replacement Projects-Madison Street		☑	$ 970,000	2027-2028
SS-4	Public Works Shop Generator Replacement		☑	$ 490,000	2027
SS-5	$500,000/yr. Pipe Replacement Projects-South Blakely Street		☑	$ 650,000	2028-2029
SS-6	$500,000/yr. Pipe Replacement Projects-South Lewis Street		☑	$ 750,000	2029-2030
SS-7	Valley View Pump Station		☑	$ 6,800,000	2025-2027
SS-8	Cate's Pump Station Upgrades		☑	$ 680,000	2026-2027
SS-9	West Main Pump Station Upgrades		☑	$ 680,000	2026-2027
SS-10	Fox Meadows Pump Station Upgrades		☑	$ 1,000,000	2027-2028
SS-11	Fryelands Pump Station and Force Main Upgrades	☑	☑	$ 5,480,000	2028-2029
SS-12	Old Owen Pump Station Upgrades		☑	$ 1,710,000	2030
SS-13	Solids Treatment and Handling Upgrades		☑	$ 29,250,000	2025-2026
SS-14	Aeration Basin Diffuser Replacement		☑	$ 210,000	2029
SS-15	Plantwide SCADA and Control Upgrades		☑	$ 1,950,000	2029-2030
SS-16	Secondary Treatment Upgrades	☑	☑	$ 23,100,000	2029-2030
SS-17	CL402 Gearbox Replacement		☑	$ 110,000	2025
SS-18	UV Rebuild/Scrubber Media		☑	$ 660,000	2025-2030
SS-19	WWTP Rerating Study	☑		$ 30,000	2030
SS-20	179th FM Terrace/WWTP		☑	$ 200,000	2028-2029
	Total 6-year CIP Cost Opinion			**$ 76,480,000**	

Notes:
1) Costs are in future dollars. Future Values utilize an inflation rate of 3.0 percent for the first six years and 2.4 percent for years seven through twenty extrapolated from 2024-dollar valuations. The 6-year CIP costs were provided by the City.
2) No costs are included for financing, easements, right-of-way, or property acquisition unless specifically noted. Project Implementation schedule for the 6-year CIP projects will be dependent on available funding.

Table SS 11-2
CIP Opinion of Probable Project Costs: Years 7-20 (2031-2045)

CIP No.	Project	Capacity	Obsolescence	Opinion of Probable Project Cost [1, 2]	Year
Collection and Conveyance					
SS-101	Future Pipe Replacement Project[4]	☑	☑	$ 13,670,000	2044
Lift Station[3]					
SS-102	Park Place Pump Station Upgrades	☑	☑	$ 2,150,000	2044
SS-103	South Fryelands Pump Station Upgrades	☑	☑	$ 1,940,000	2044
SS-104	Beaton Pump Station Upgrades		☑	$ 1,020,000	2044
Wastewater Treatment Plant					
SS-105	Admin Building Replacement or Upgrades		☑	$ 3,380,000	2040
SS-106	Centrifugal Blower Replacement	☑	☑	$ 560,000	2035
SS-107	Future WWTP projects[4]	☑	☑	$ 8,800,000	2044
	Total 20-year CIP Cost Opinion			**$ 31,520,000**	

Notes:
1) Costs are in future dollars. Future Values utilize an inflation rate of 3.0 percent for the first six years and 2.4 percent for years seven through twenty extrapolated from 2024 dollar valuations.
2) No costs are included for financing, easements, right-of-way, or property acquisition unless specifically noted.
3) The 20-year CIP project costs for Lift Station are based on City's 2015 Utility Plan and have been adjusted for 2024 using ENR index.
4) Designated for future conveyance system capital replacement projects during the 20-year planning horizon.

Table SS 11-3
CIP Project Descriptions : Years 1-6 (2025-2030)

CIP Number	Project Title	Project Description
SS-4	Public Works Shop Generator Replacement	▪ The existing generator at the public works shop is approaching the end of its service life. This CIP project will replace the existing generator in kind with a new unit.
SS-7	Valley View Pump Station	▪ Pump station reaches its design capacity and the end of its useful design life in the 6-year planning horizon. ▪ Upgrades include new pumps, piping, electrical, instrumentation, and controls. It is assumed that the structures are in sufficient condition and do not need to be upgraded. ▪ Increase the capacity of the pump station from 1650 gpm to 5100 gpm. ▪ A condition assessment of the wet well and dry well to be performed during project design.
SS-8	Cate's Pump Station Upgrades	▪ Pump station reaches the end of its useful design life in the 6-year planning horizon. ▪ Upgrades include new pumps, piping, electrical, instrumentation, and controls. It is assumed that the structures are in sufficient condition and do not need to be upgraded. ▪ A condition assessment of the wet well should be performed during project design.
SS-9	West Main Pump Station Upgrades	▪ Pump station reaches the end of its useful design life in the 6-year planning horizon. ▪ Upgrades include new pumps, piping, electrical, instrumentation, and controls. It is assumed that the structures are in sufficient condition and do not need to be upgraded. ▪ A condition assessment of the wet well should be performed during project design.
SS-10	Fox Meadows Pump Station Upgrades	▪ Pump station reaches its design capacity and the end of its useful design life in the 6-year planning horizon. ▪ Upgrades include new pumps, piping, electrical, instrumentation, and controls. It is assumed that the structures are in sufficient condition and do not need to be upgraded. ▪ A condition assessment of the enclosure and sub-structures to be performed during project design.
SS-11	Fryelands Pump Station and Force Main Upgrades	▪ Pump station and force main reach their design capacity and the end of useful design life in the 6-year planning horizon. ▪ Upgrades include new pumps, piping, electrical, instrumentation, and controls. It is assumed that the structures are in sufficient condition and do not need to be upgraded. ▪ Increase the capacity of the pump station from 750 gpm to 1050 gpm. ▪ A condition assessment of the enclosure and sub-structures to be performed during project design. ▪ Project to be coordinated with Lake Tye stormwater project.
SS-12	Old Owen Pump Station Upgrades	▪ Pump station reaches its design capacity and the end of its useful design life in the 6-year planning horizon. ▪ Upgrades include new pumps, piping, electrical, instrumentation, and controls. It is assumed that the structures are in sufficient condition and do not need to be upgraded. ▪ A condition assessment of the enclosure and sub-structures to be performed during project design.

Chapter SS 12 Sanitary Sewer Financial Plan

SS 12.1 Introduction

This chapter was prepared by FCS GROUP to provide a financial program that allows the City sewer utility to fund the utility's fixed costs, variable costs, and capital projects during the planning period. This financial viability analysis considers the historical financial condition, current and identified future financial and policy obligations, operation and maintenance (O&M) needs, and the financial impacts of the capital projects identified in this Sanitary Sewer System Plan (SSSP). Furthermore, this chapter provides a review of the sewer utility's current rate structure with respect to rate adequacy and customer affordability.

The rate recommendations outlined in this chapter are intended to capture the current fiscal position of the utility, and to detail the future fiscal needs if no further financial analysis were to be completed. In 2026, the City intends to undergo a more thorough utility rate analysis including an evaluation of customer classes, the basis for rates and charges, as well as capital connection charges. The analysis will evaluate capital improvement plan expenditures to ensure they are achievable within proposed timeframes and plan for issuance of debt that is aligned with policy obligations.

The City approved Resolution 022-2019 adopting a 6-year rate model in November 2019. The final year of the adopted 6-year rate model is 2025, which includes a planned rate increase for stormwater of 10% and drinking water of 3%. The sewer utility has no planned increase.

In 2026, the City will consider an inflationary increase of 3.8% for stormwater, water, and sewer utilities. This increase is designed to bridge the gap between the end of the 6-year rate model in 2025, and the completion of the more detailed rate analysis in 2026 for implementation in 2027.

SS 12.2 Past Financial Performance

This section includes a historical summary of financial performance as reported by the City, including fund resources and uses arising from cash transactions.

SS 12.2.1 Comparative Financial Statements

The City legally owns and operates a sewer utility. The City's utility operates on a cash basis. Therefore, annual balance sheets and income statements are not prepared. Table SS 12-1 shows a summary of sewer fund resources and uses arising from cash transactions for the previous 6 years (2018 through 2023). Noteworthy findings and trends for the historical performance and condition of the City's sewer utility are then discussed.

Table SS 12-1
Summary of Historical Fund Resources and Uses Arising from Cash Transactions

Description	2018	2019	2020	2021	2022	2023
Beginning Cash and Investments	$ 9,789,811	$10,646,407	$11,691,549	$13,576,577	$15,781,824	$15,327,984
Net Adjustments	-	-	-	-	-	-
Revenues						
Taxes	$ -	$ -	$ -	$ -	$ -	$ -
Licenses and Permits	-	-	-	-	-	-
Intergovernmental Revenues	-	-	23,243	12,544	236,269	722,275
Charges for Goods and Services	7,778,282	8,018,908	8,040,715	8,378,084	2,834,288	8,805,823
Fines and Penalties	-	-	-	-	-	-
Miscellaneous Revenues	1,661,440	2,108,708	2,012,068	1,692,359	16,141	1,613,282
Total Revenues	**$ 9,439,722**	**$10,127,616**	**$10,076,026**	**$10,082,987**	**$ 3,086,698**	**$11,141,380**
Expenditures						
General Government	$ -	$ -	$ -	$ -	$ -	$ -
Public Safety	17,504	20,108	17,598	22,699	18,682	9,159
Utilities	4,147,132	5,229,077	5,658,300	5,181,771	2,261,684	5,773,633
Transportation	-	-	-	-	-	-
Natural / Economic Environment	-	-	-	-	-	-
Social Services	-	-	-	-	-	-
Culture and Recreation	-	-	-	-	-	-
Total Expenditures	**$ 4,164,636**	**$ 5,249,185**	**$ 5,675,898**	**$ 5,204,470**	**$ 2,280,366**	**$ 5,782,792**
Excess (Deficiency) Revenues over Expenditures	**$ 5,275,086**	**$ 4,878,431**	**$ 4,400,128**	**$ 4,878,517**	**$ 806,332**	**$ 5,358,588**
Other Increases in Fund Resources						
Debt Proceeds	$ -	$ -	$ -	$ -	$ 34,205	$ -
Transfers-In	-	-	830	-	-	-
Special or Extraordinary Items	-	-	-	-	-	-
Custodial Activities	20,849	4,389	-	-	-	-
Other Resources	-	-	-	531	-	-
Total Other Increases in Fund Resources	**$ 20,849**	**$ 4,389**	**$ 830**	**$ 531**	**$ 34,205**	**$ -**
Other Decreases in Fund Resources						
Capital Expenditures	$ 2,411,471	$ 1,836,506	$ 638,316	$ 793,532	$ 219,380	$ 1,763,717
Debt Service	1,945,582	1,941,236	1,877,615	1,879,744	217,075	1,020,375
Transfers-Out	63,465	57,739	-	-	-	-
Special or Extraordinary Items	-	-	-	-	-	-
Custodial Activities	18,819	2,195	-	-	-	-
Other Uses	-	-	-	521	-	-
Total Other Decreases in Fund Resources	**$ 4,439,337**	**$ 3,837,676**	**$ 2,515,931**	**$ 2,673,797**	**$ 436,455**	**$ 2,784,092**
Increase (Decrease) in Cash and Investments	**$ 856,598**	**$ 1,045,144**	**$ 1,885,027**	**$ 2,205,251**	**$ 404,082**	**$ 2,574,496**
Ending Cash and Investments						
Nonspendable	$ -	$ -	$ -	$ -	$ -	$ -
Restricted / Reserved	1,923,303	1,855,456	1,875,888	1,885,874	160,106	1,487,216
Committed	-	-	-	-	-	-
Assigned / Unreserved	8,723,104	9,836,092	11,700,689	13,895,952	1,419,640	16,415,263
Unassigned	-	-	-	-	-	-
Total Ending Cash and Investments	**$10,646,407**	**$11,691,548**	**$13,576,577**	**$15,781,826**	**$ 1,579,746**	**$17,902,479**
O&M Coverage Ratio	226.66%	192.94%	177.52%	193.74%	135.36%	192.66%
Net Operating Income as a % of Operating Revenue	55.88%	48.17%	43.67%	48.38%	26.12%	48.10%
Debt Service Coverage Ratio	2.71	2.51	2.34	2.60	3.71	5.25

Findings and Trends

- The City's sewer charges for services, intergovernmental revenues and miscellaneous revenues increased from $4.4 million (M) in 2018 to $11.1M in 2023. The average compounding annual increase was 3.4 percent per year, with a total increase of 18.0 percent from 2018 to 2023. Operating expenditures increased from $4.2M in 2018 to $5.8M in 2023. The average compounding annual increase was 6.8 percent per year, with a total increase of 38.9 percent. While the percentage growth in operating expenses outpaced growth in revenues, total revenues were approximately 2.0 times the operating expenses allowing net income to increase from $5.3M in 2018 to $5.4M in 2023.
- The O&M coverage ratio (total operating revenues divided by total operating expenses) was 226.7 percent in 2018. Due to the greater rate of increase in expenditures, this ratio decreased to 192.7 percent in 2023. A ratio of 100 percent or greater shows that operating revenue will successfully cover operating expenses, and the utility has remained above this ratio for the past 6 years.
- Net operating income as a percentage of operating revenue was 55.9 percent in 2018. This metric decreased to 43.7 percent in 2020, then increased to 48.4 percent in 2021 and maintained at approximately the same rate through 2023 ending at 48.1 percent. Similar to the O&M coverage ratio, these trends help to show how successfully operating revenue actually covered operating expenses, with higher positive numbers being the best and negative numbers showing the need for improvement. In addition, these trends demonstrate the ability of the utility to invest in capital, whether through direct cash transfers or the issuance and servicing of debt.
- The debt service coverage ratio measures the amount of cash flow available to meet principal and interest payments. Typically, revenue bond debt service coverage requires a minimum factor of 1.25 during the life of the loans. This ratio is calculated by dividing cash or net operating income (operating revenues less operating expenses) by annual revenue bond debt service. The City's annual reports did not separate the debt service between revenue bond debt and junior lien debt; therefore, the coverage ratios were calculated on total debt, which is a more conservative comparison. The total debt service coverage ratio for all outstanding debt ended 2018 at 2.7, decreased to 2.3 in 2020 as operating expenses increased before rebuilding to 5.3 in 2023. The fact that this ratio has sustained levels higher than the minimum target of 1.25 indicates a stable capacity for new debt and will likely result in favorable terms when entering the bond market.

SS 12.3 Financial Plan

The sewer utility is responsible for generating sufficient revenue to meet all of its costs. The primary source of funding is derived from ongoing monthly service charges, with additional revenue coming from late penalties and interest earnings. The City controls the level of user charges and, with City Council approval, can adjust user charges as needed to meet financial objectives.

The financial plan can only confirm financial feasibility if it considers the total system costs of providing sewer services, both operating and capital. To meet these objectives, the following elements have been completed.

1. Capital Funding Plan: Identifies the total capital improvement plan (CIP) obligations of the planning period. The plan defines a strategy for funding the CIP, including an analysis of available resources from rate revenues, existing reserves, connection charge revenues, debt financing, and any special

resources that may be readily available (e.g., grants, developer contributions, etc.). The capital funding plan impacts the financial plan through the use of debt financing (resulting in annual debt service) and the assumed rate revenue made available for capital funding.

2. Financial Forecast: Identifies future annual non-capital costs associated with the operation, maintenance, and administration of the sewer system. Included in the financial plan is a reserve analysis that forecasts cash flow and fund balance activity, along with testing for satisfaction of actual or recommended minimum fund balance policies. The financial plan ultimately evaluates the sufficiency of utility revenues in meeting all obligations, including cash uses such as operating expenses, debt service, capital outlays, and reserve contributions, as well as any coverage requirements associated with long-term debt. The plan also identifies the future adjustments required to fully fund all utility obligations in the planning period.

SS 12.3.1 Capital Funding Plan

To properly evaluate future capital funding needs, capital costs were escalated by 4.0 percent in 2025 and 2026, 3.5 percent in 2027 and 2028 and 3.0 percent annually thereafter to the year of planned spending. The CIP developed for this SSSP identifies $84.5M in escalated project costs over the 6-year planning horizon from 2025-2030, in addition to the 2024 budget of $5.5M. The 20-year period, through 2044, along with the 2024 budget includes $139.7M in total escalated project costs.

A summary of the 6-year and 20-year CIPs are shown in Table SS 12-2. As shown, each year has varied capital cost obligations depending on construction schedules and infrastructure planning needs.

Table SS 12-2
Budget, 6-Year and 20-Year CIPs

Year	Unescalated $	Escalated $
2024	$ 5,472,372	$ 5,472,372
2025	17,262,136	17,952,621
2026	14,427,184	15,604,443
2027	7,446,602	8,336,143
2028	2,233,010	2,587,248
2029	12,058,252	14,390,271
2030	20,825,243	25,598,346
6-Year Total	**$ 79,724,799**	**$ 89,941,444**
2031 - 2044	30,781,250	49,801,043
20-Year Total	**$ 110,506,049**	**$ 139,742,487**

Table SS 12-3 provides more detail for the 6-year CIP.

Table SS 12-3
Budget and 6-Year CIP (Escalated $)

Project	2024	2025	2026	2027	2028	2029	2030	Total
$500,000/yr Pipe Replacement Projects-Short Columbia St	$ -	$ 1,565,049	$ -	$ -	$ -	$ -	$ -	$ 1,565,049
$500,000/yr Replacement Projects -S Sams St	-	212,039	-	-	-	-	-	212,039
$500,000/yr Pipe Replacement Projects-Madison St	-	-	-	152,159	933,659	-	-	1,085,818
Public Works Shop Generator Replacement	-	-	-	532,557	-	-	-	532,557
$500,000/yr Pipe Replacement Projects-S Blakely St	-	-	-	-	146,236	602,491	-	748,727
$500,000/yr Pipe Replacement Projects-S. Lewis St	-	-	-	-	-	173,796	716,038	889,833
Valley View Pump Station Upgrades	-	373,592	735,068	6,227,653	-	-	-	7,336,313
Cate's Pump Station Upgrades	-	-	136,513	597,768	-	-	-	734,280
West Main Pump Station Upgrades	-	-	136,513	597,768	-	-	-	734,280
Fox Meadows Pump Station Upgrades	-	-	-	119,554	1,001,152	-	-	1,120,706
Fryelands Pump Station and Force Main Upgrades	-	-	-	-	348,716	5,990,153	-	6,338,869
Old Owen Pump Station Upgrades	-	-	-	-	-	-	2,040,707	2,040,707
Solids Treatment and Handling Upgrades	-	15,600,000	14,491,340	-	-	-	-	30,091,340
Aeration Basin Diffuser Replacement	-	-	-	-	-	243,314	-	243,314
Plantwide SCADA and Control Upgrades	-	-	-	-	-	1,274,501	1,014,387	2,288,887
Secondary Treatment Upgrades	-	-	-	-	-	5,758,426	21,636,271	27,394,696
CL402 Gearbox Replacement	-	111,068	-	-	-	-	-	111,068
UV Rebuild/Scrubber Media (100k annually)	-	90,874	105,010	108,685	123,738	150,623	155,141	734,071
WWTP Rerating Study	-	-	-	-	-	-	35,802	35,802
179th FM Terrace/WWTP	-	-	-	-	33,747	196,968	-	230,715
	-	-	-	-	-	-	-	-
2024 Budget - Construction	4,773,892	-	-	-	-	-	-	4,773,892
2024 Budget - Capitalized Labor	698,480	-	-	-	-	-	-	698,480
Total	**$ 5,472,372**	**$17,952,621**	**$15,604,443**	**$ 8,336,143**	**$ 2,587,248**	**$14,390,271**	**$25,598,346**	**$89,941,444**

SS 12.4 Available Funding Assistance and Financing Resources

SS 12.4.1 City Resources

Resources appropriate for funding capital needs include accumulated cash in the capital fund, rate revenues designated for capital spending purposes, developer contributions, and capital-related charges such as system development charges. The first two resources will be discussed in the Fiscal Policies section of the Financial Forecast. Capital-related charges are discussed below.

System Development Charges

A connection charge such as the City's system development charge (SDC) refers to a one-time charge imposed on new customers as a condition of connecting to the sewer system. The purpose of the SDC is two-fold: 1) to promote equity between new and existing customers; and 2) to provide a source of revenue to fund capital projects necessary for meeting growth. This revenue can only be used to fund utility capital projects or to pay debt service incurred to finance those projects. In the absence of a connection charge, growth-related capital costs would be borne in large part by existing customers. In 2024, the City charged all new customers an SDC of $7,456 per meter capacity equivalent (MCE). MCEs are defined by the American Water Works Association and represent the maximum safe operating flow capacity in gallons per minute, relative to the base meter size. The City should consider updating SDCs in the near future to capture and incorporate the capacity related infrastructure identified in this update to the SSSP.

Local Facilities Charges

While a connection charge is the manner in which new customers pay their share of system investment costs, local facilities charge funding is used to pay the costs of local facilities that connect each property to the system's infrastructure. Local facilities funding is often overlooked in rate forecasting because it is funded upfront by either connecting customers and developers, or through an assessment to properties, but never from rates.

A number of mechanisms can be considered toward funding local facilities. One of the following scenarios typically occurs: (a) the utility charges a connection fee based on the cost of the local facilities (under the same authority as the facilities assessment fee); (b) a developer funds an extension of the system to its development and turns those facilities over to the utility (contributed capital); or (c) a local assessment is set up called a Utility Local Improvement District (ULID/LID) or a Local Utility District (LUD), which collects tax revenue from benefited properties.

A local facilities charge (LFC) is a variation of the connection charge. It is a city-imposed charge to recover the cost related to service extension to local properties. Often called a front-footage charge and imposed on the basis of footage of the main "fronting" a particular property, it is usually implemented as a reimbursement mechanism to a city for the cost of a local facility that directly serves a property. It is a form of a connection charge and thus can accumulate up to 10 years of interest. It typically applies in instances when no developer-installed facilities are needed through developer extension due to the prior existence of available mains already serving the developing property.

The developer extension is a requirement that a developer install on-site and sometimes off-site improvements as a condition of extending service. These are in addition to the connection charge required and must be built to City standards. Part of the agreement between the City and the developer planning to

extend service might include a latecomer agreement (also called payback agreements), resulting in a latecomer charge to new connections for the developer extension.

Latecomer charges are a variation of developer extensions, whereby new customers connecting to a developer-installed improvement make a payment to the City based on their share of the developer's cost. The City passes this charge on to the developer who installed the facilities. As part of the developer extension process, this defines the allocation of costs and records latecomer obligations on the title of affected properties. No interest is allowed, and the reimbursement agreement cannot exceed 20 years in duration.

ULID/LID is another mechanism for funding infrastructure that assesses benefited properties based on the special benefit received by the construction of specific facilities. Most often used for local facilities, some ULIDs also recover related general facilities costs. Substantial legal and procedural requirements can make this a relatively expensive process, and there are mechanisms by which a ULID can be rejected.

SS 12.4.2 Outside Resources

This section outlines various grant, loan, and bond opportunities available to the City through federal and state agencies to fund the CIP identified in the SSSP.

Grants and Low-Cost Loans

Historically, federal and state grant programs were available to local utilities for capital funding assistance. However, these assistance programs have been mostly eliminated, substantially reduced in scope and amount, or replaced by loan programs. Remaining grant programs are generally lightly funded and heavily subscribed. Nonetheless, the benefit of low-interest loans makes the effort of applying worthwhile.
The State of Washington's Department of Commerce maintains a document currently entitled "*Funding Programs for Drinking Water and Wastewater Projects; Updated 3-5-2024*", which contains details on government programs, eligibility requirements, and contact information, should the City wish to inquire about program offerings and eligibility requirements.

Bond Financing

General Obligation Bonds

General obligation (G.O.) bonds are bonds secured by the full faith and credit of the issuing agency, committing all available tax and revenue resources to debt repayment. With this high level of commitment, G.O. bonds have relatively low interest rates and few financial restrictions. However, the authority to issue G.O. bonds is restricted in terms of the amount and use of the funds, as defined by the Washington constitution and statute. Specifically, the amount of debt that can be issued is linked to assessed valuation.

Revised Code of Washington (RCW) 39.36.020 states:

> (2)(a)(ii) Counties, cities, and towns are limited to an indebtedness amount not exceeding one and one half percent of the value of the taxable property in such counties, cities, or towns without the assent of three-fifths of the voters therein voting at an election held for that purpose.
>
> (b) In cases requiring such assent counties, cities, towns, and public hospital districts are limited to a total indebtedness of two and one-half percent of the value of the taxable property therein.

While bonding capacity can limit the availability of G.O. bonds for utility purposes, these can sometimes play a valuable role in project financing. A utility rate savings may be realized through two avenues: the lower interest rate and related bond costs, and the extension of repayment obligation to all tax-paying properties (not just developed properties) through the authorization of an ad valorem property tax levy.

Revenue Bonds

Revenue bonds are commonly used to fund utility capital improvements. The debt is secured by the revenues of the issuing utility. With this limited commitment, revenue bonds typically bear higher interest rates than G.O. bonds and require security conditions related to the maintenance of dedicated reserves (a bond reserve) and financial performance (added bond debt service coverage). The City agrees to satisfy these requirements by resolution as a condition of bond sale.

Revenue bonds can be issued in Washington without a public vote. There is no bonding limit, except perhaps the practical limit of the utility's ability to generate sufficient revenue to repay the debt and provide coverage. In some cases, poor credit might make issuing revenue bonds problematic.

SS 12.4.3 Capital Funding Strategy

An ideal capital financing strategy would include the use of grants and low-cost loans when debt issuance is required. However, these resources are very limited and competitive in nature and do not provide a reliable source of funding for planning purposes. It is recommended that the City pursue these funding avenues but assume revenue bond financing to meet the needs which can't be met by available cash resources. The capital financing strategy developed to fund the CIP identified in this SSSP assumes the following funding resources:

- Accumulated cash reserves,
- Transfers of excess cash (over minimum balance targets) from the Operating Fund,
- System development charge revenue,
- Interest earned on Capital Fund balances, and
- Revenue bond financing.

The cash resources described above, including SDC revenues, are anticipated to fund 39.9 percent of the 2024 budget and 6-year CIP and 61.3 percent of the 20-year CIP. The remaining funding is assumed to be from new debt obligations of $54.1M in the next 6-year planning period. Table SS 12-4 presents the 6-year and 20-year capital financing strategy.

Table SS 12-4
Budget, 6-Year and 20-Year Capital Financing Strategy

Year	CIP (Escalated)	Funding Sources			Total Financial Resources
		SDCs	New Debt	Cash Funding	
2024	$ 5,472,372	$ 492,017	$ -	$ 4,980,355	$ 5,472,372
2025	17,952,621	706,002	16,000,000	1,246,619	17,952,621
2026	15,604,443	714,898	-	14,889,545	15,604,443
2027	8,336,143	723,906	5,000,000	2,612,238	8,336,143
2028	2,587,248	733,027	-	1,854,221	2,587,248
2029	14,390,271	742,263	13,648,008	-	14,390,271
2030	25,598,346	751,615	19,451,992	5,394,738	25,598,346
6-Year Total	**$ 89,941,444**	**$ 4,863,728**	**$ 54,100,000**	**$ 30,977,716**	**$ 89,941,444**
2031 - 2044	49,801,043	11,573,407	-	38,227,637	49,801,043
20-Year Total	**$ 139,742,487**	**$ 16,437,134**	**$ 54,100,000**	**$ 69,205,352**	**$ 139,742,487**

SS 12.5 Financial Forecast

The financial forecast, or revenue requirement analysis, forecasts the amount of annual revenue that needs to be generated by user rates. The analysis incorporates operating revenues, O&M expenses, debt service payments, rate-funded capital needs, and any other identified revenues or expenses related to operations. The objective of the financial forecast is to evaluate the sufficiency of the current level of rates. In addition to annual operating costs, the revenue needs also include debt covenant requirements and specific fiscal policies and financial goals of the City.

For this analysis, two revenue sufficiency tests have been developed to reflect the financial goals and constraints of the City: cash needs must be met; and debt coverage requirements must be realized. In order to operate successfully with respect to these goals, both tests of revenue sufficiency must be met.

1. Cash Test: The cash flow test identifies all known cash requirements for the City in each year of the planning period. Typically, these include O&M expenses, debt service payments, rate-funded system reinvestment or directly funded capital outlays, and any additions to specified reserve balances. The total annual cash needs of the City are then compared to projected cash revenues using the current rate structure. Any projected revenue shortfalls are identified, and the rate increases necessary to make up the shortfalls are established.
2. Coverage Test: The coverage test is based on a commitment made by the City when issuing revenue bonds and some other forms of long-term debt. For the purposes of this analysis, revenue bond debt is assumed for any needed debt issuance. As a security condition of issuance, the City would be required per covenant to agree that the revenue bond debt would have a higher priority for payment (a senior lien) compared to most other expenditures; the only outlays with a higher lien are O&M expenses. Debt service coverage is expressed as a multiplier of the annual revenue bond debt service payment. For example, a 1.00 coverage factor would imply that no additional cushion is required. A 1.25 coverage factor means revenue must be sufficient to pay O&M expenses, annual revenue bond debt service payments, and an additional 25.0 percent of annual revenue bond debt service payments. The excess cash flow derived from the added coverage, if any, can be used for any purpose, including funding capital projects. Targeting a higher coverage factor can help the City achieve a better credit rating and provide lower interest rates for future debt issues.

SS 12.5.1 Current Financial Structure

The City maintains a fund structure and implements financial policies that target management of a financially viable and fiscally responsible sewer system.

Fiscal Policies

A summary of the key financial policies employed by the City, as well as those recommended and incorporated in the financial program, are discussed below.

Operating Reserve

Operating reserves are designed to provide a liquidity cushion to ensure that adequate cash working capital will be maintained to deal with significant cash balance fluctuations, such as seasonal fluctuations in billings and receipts, unanticipated cash expenses, or lower than expected revenue collections. Like other types of reserves, operating reserves also serve another purpose: they help smooth rate increases over time. Target funding levels for an operating reserve are generally expressed as a certain number of days of O&M expenses, with the minimum requirement varying with the expected revenue volatility. Industry practice for utility operating reserves ranges from 30 days (8.0 percent) to 120 days (33.0 percent) of O&M expenses, with the lower end more appropriate for utilities with stable revenue streams and the higher end more appropriate for utilities with significant seasonal or consumption-based fluctuations. The City's current goal is to maintain a minimum balance in the Operating Fund equal to 45 days of O&M expenses and annual debt service for working capital.

Capital Reserve

A capital contingency reserve is an amount of cash set aside in case of an emergency should a piece of equipment or a portion of the utility's infrastructure fail unexpectedly. The reserve also could be used for other unanticipated capital needs, including capital project cost overruns. Industry practices range from maintaining a balance equal to 1.0 to 2.0 percent of fixed assets, an amount equal to a 5-year rolling average of CIP costs, or an amount determined sufficient to fund equipment failure (other than catastrophic failure). The final target level should balance industry practices with the risk level of the City.

This financial plan targets a minimum balance in the sewer utility capital fund equal to 1.0 percent of fixed assets.

System Reinvestment

System reinvestment funding promotes system integrity through ongoing repair and replacement of system infrastructure. Ideally, a detailed asset management plan would guide the level of rate funded system reinvestment, however, in absence of this level of effort, annual depreciation expense is commonly used as a measure of the decline in asset value associated with routine use of the system. Particularly for utilities that do not already have an explicit system reinvestment policy in place, implementing a funding level based on full depreciation expense could significantly impact rates. An alternative benchmark is annual depreciation expense net of debt principal payments on outstanding debt. This approach recognizes that customers are still paying for certain assets through the debt component of their rate and intends to avoid simultaneously charging customers for an asset and its future replacement. The specific benchmark used to set system reinvestment funding targets is a matter of policy that must balance various objectives, including managing rate impacts, keeping long-term costs down, and promoting "generational equity" (i.e.,

not excessively burdening current customers with paying for facilities that will serve a larger group of customers in the future).

The City does not currently have a policy in place for system reinvestment funding. No dedicated system reinvestment funding is assumed in this financial plan; however, current practice is to transfer cash above the minimum operating target balance to the capital fund as cash-funded capital. On average, the study assumed an annual transfer of approximately $2.4M per year within the budget and 6-year planning period.

Debt Management

It is prudent to consider policies related to debt management as part of a broader utility financial policy structure. Debt management policies should be evaluated and formalized, including the level of acceptable outstanding debt, debt repayment, bond coverage, and total debt coverage targets. The City has two outstanding sewer revenue bonds and a municipal bond. The revenue bonds carry a coverage requirement of 1.25.

Because the City intends to continue using revenue bonds as a significant source of capital funding, this financial plan targets coverage at 1.5. Targeting a higher than required coverage factor helps the City maintain its credit rating and may provide lower interest rates for future debt issues.

Financial Forecast

The financial forecast is primarily based upon the City's budget through 2024 and takes into consideration other key factors and assumptions needed to develop a complete portrait of the City's annual sewer utility financial obligations. The following is a list of the key revenue and expense factors and assumptions used to develop the financial forecast.

- Growth – Rate revenue is escalated utilizing a 1.26 percent growth rate developed based on actual historical trends at the City.
- Revenue – The City has two general revenue sources: 1) sewer service charges (rate revenue); and 2) miscellaneous (non-rate) revenue. In the event of a forecasted annual shortfall, rate revenue can be increased to meet the annual revenue requirement. For the purpose of this financial forecast, rate revenues are forecasted to increase with customer growth. Non-rate revenues are escalated using general cost inflation assumptions with the exception of interest earnings which are calculated based on projected balances and assumed investment rates.
- System Development Charge Revenue – the existing system development charges are applied to the projected new connections to forecast revenue. Connection charges are forecast to generate an average of $695,000 annually from 2024-2030. This equates to an average of 97 new MCEs per year. Connection charge revenue is directed towards annual capital needs.
- Expenses – O&M expense projections are based on the City's budget through 2024 and detailed review of line item expenses with City staff and were forecasted into the future based on the following assumptions:
    - General cost inflation: 4.0 percent in 2025 and 2026 followed by 3.0 percent per year thereafter.
    - Labor cost inflation: 3.0 percent in 2025 and 2026 followed by 5.0 percent per year thereafter.
    - Benefit cost inflation: 10.0 percent per year.

  - Liability insurance inflation: 15.0 percent per year 2025 through 2029 followed by 10.0 percent per year thereafter.
  - Taxes: taxes were calculated based on forecasted revenues and prevailing tax rates.
- Existing Debt – The sewer utility has three outstanding debt issues: two revenue bonds and one Limited Tax General Obligation (LTGO) bond. Total annual existing debt service obligations begin 2024 at $1.2M, decreasing to $984,000 by 2030 based on the amortization schedules of the 2017 revenue bonds.
- Future Debt – The capital financial strategy developed for this SSSP forecasts the need for $54.1M in new debt proceeds in three separate instances throughout the six-year forecast. The analysis performed assumes all new debt is through revenue bond financing. Annual new debt service obligations are forecasted to begin in 2025 at $1.4M increasing to $4.8 million by 2030.
- Transfers to Capital – As discussed in the system reinvestment section above, operating fund balance above the minimum requirement is assumed to be available to fund capital projects and projected to be transferred to the Capital Fund each year, if needed. In total, the utility is forecast to fund $16.7 million in capital projects from excess operating fund cash within the 6-year forecast period.

Although the financial plan is completed through 2044, the rate strategy focuses on the shorter-term planning period of 2025 through 2030. It is recommended that the City revisit the proposed rates every 3 to 4 years and consider ordinances setting rates for that same period to ensure that the rate projections developed remain adequate and that rate revenues are consistent year over year. Any proposed significant changes should be incorporated into the financial plan and future rates should be adjusted as needed.

Table SS 12-5, following, summarizes the annual revenue requirements based on the forecast of revenues, expenditures, fund balances, and fiscal policies.

Table SS 12-5
Budget and 6-Year Financial Forecast

Description	2024	2025	2026	2027	2028	2029	2030
Revenues							
Rate Revenues Under Existing Rates	$ 8,767,165	$ 8,862,473	$ 8,958,982	$ 9,056,706	$ 9,155,662	$ 9,255,865	$ 9,357,331
Non-Rate Revenues	98,058	72,656	101,368	102,888	114,986	116,334	190,209
Total Revenues	**$ 8,865,224**	**$ 8,935,129**	**$ 9,060,350**	**$ 9,159,594**	**$ 9,270,648**	**$ 9,372,199**	**$ 9,547,539**
Expenses							
Cash Operating Expenses	$ 5,526,728	$ 5,784,882	$ 6,052,767	$ 6,195,140	$ 6,380,808	$ 6,697,629	$ 7,029,000
Existing Debt Service	1,156,155	985,122	985,430	984,660	986,072	987,130	983,822
New Debt Service	-	1,411,235	1,411,235	1,852,246	1,852,246	4,771,738	4,771,738
Total Expenses	**$ 6,682,883**	**$ 8,181,238**	**$ 8,449,432**	**$ 9,032,046**	**$ 9,219,126**	**$ 12,456,497**	**$ 12,784,560**
Total Surplus (Deficiency)	**$ 2,182,340**	**$ 753,891**	**$ 610,918**	**$ 127,548**	**$ 51,522**	**$ (3,084,298)**	**$ (3,237,021)**
Annual Rate Adjustment	**0.00%**	**10.10%**	**10.10%**	**10.10%**	**10.10%**	**10.10%**	**2.00%**
Cumulative Annual Rate Adjustment	**0.00%**	**10.10%**	**21.22%**	**33.46%**	**46.94%**	**61.78%**	**65.02%**
Rate Revenues After Rate Increase	$ 8,767,165	$ 9,757,583	$ 10,860,087	$ 12,087,382	$ 13,453,617	$ 14,974,544	$ 15,441,474
Additional Taxes from Rate Increase	-	123,991	263,341	419,809	595,353	792,151	842,775
Net Cash Flow After Rate Increase	**$ 2,182,340**	**$ 1,525,010**	**$ 2,248,682**	**$ 2,738,415**	**$ 3,754,124**	**$ 1,842,230**	**$ 2,004,347**
Coverage After Rate Increases	4.0	2.2	2.5	2.4	2.7	1.5	1.6

The financial forecast indicates that at existing rate levels, revenues are sufficient to cover operating expenses in 2025 and generate a surplus of $754,000 which can be used to partially offset the annual capital program. As expenses outpace growth and the utility takes on additional debt obligations to fund capital infrastructure investments, rates become deficient in 2029 by $3.1M, with the deficiency increasing to $3.2M by 2030. In order to resolve the projected deficiency, rates will need to increase by 10.1 percent annually from 2025 through 2029 and 2.0 percent in 2030.

City Funds and Reserves

Table SS 12-6 shows a summary of the projected Operating Fund and Capital Fund ending balances through 2030 based on the rate forecasts presented above. The Operating Fund is maintained above 45 days of O&M expenses and annual debt service. The Capital Fund balance meets or exceeds the minimum target of 1.0 percent of fixed assets in every year of the forecast period.

Table SS 12-6
Ending Cash Balance Summary

Project	2024	2025	2026	2027	2028	2029	2030
Operating Fund	$ 1,160,922	$ 1,008,646	$ 1,041,711	$ 1,113,540	$ 1,136,605	$ 1,535,732	$ 1,576,179
Capital Fund	12,601,543	13,284,241	875,998	947,866	2,843,662	23,795,629	1,388,712
Total	**$ 13,762,465**	**$ 14,292,887**	**$ 1,917,709**	**$ 2,061,406**	**$ 3,980,266**	**$ 25,331,361**	**$ 2,964,890**

SS 12.6 Current and Projected Rates

SS 12.6.1 Current Rates

The City's existing sewer rate structure is a monthly fixed charge assessed on an account basis for single residential and nonresidential customers and on a per unit basis, with a reduced charge, for multiple residential customers. Nonresidential monthly fixed charges include a 500 cubic foot allowance and assess an excess usage charge per 100 cubic feet for usage above the allowance. Mixed nonresidential / residential customers are billed at the nonresidential rates. For services outside City limits, the charges are one hundred fifty percent of the standard in-city rate. The City offers a discounted rate for *Senior Citizen or Disabled* as well as *Low-Income Senior Citizen – Nonprofit Multifamily* customers. Table SS 12-7 shows the existing City sewer system rate schedule.

Table SS 12-7
Existing Schedule of Rates

Sewer Rates	2024 Inside	2024 Outside
Monthly Charge		
Single Residential	$ 92.15	$ 138.23
Multiple Residential - per unit	64.51	96.76
Nonresidential - up to 500 cf	92.12	138.23
Volume Charge		
Nonresidential - over 500 cf	$ 7.94	$ 11.90

Notes:

1. Mixed Nonresidential / Residential customer are billed at Nonresidential rates.
2. Low income senior citizen discount: 40% off applicable monthly fees.
3. Low income disabled persons discount: 40% off applicable monthly fees.

SS 12.6.2 Projected Rates

The financial forecast indicates that rate increases are needed to satisfy all future financial responsibilities for the sewer utility. A rate strategy of 10.1 percent annual increases from 2025 through 2029 and 2.0 percent in 2030 is recommended to satisfy this forecast deficiency. Table SS 12-8 shows the projected rates with increases applied uniformly to the sewer fixed and volume components for all classes. A more detailed rate study that will analyze the projected increases is planned to be conducted in 2026.

Table SS 12-8
Projected Schedule of Rates

Water Rates	Existing 2024	Projected 2025	2026	2027	2028	2029	2030
Monthly Charge							
Single Residential	$ 92.15	$ 101.46	$ 111.71	$ 122.99	$ 135.41	$ 149.09	$ 152.07
Multiple Residential - per unit	64.51	71.03	78.20	86.10	94.80	104.37	106.46
Nonresidential - up to 500 cf	92.12	101.42	111.66	122.94	135.36	149.03	152.01
Volume Charge							
Nonresidential - over 500 cf	$ 7.94	$ 8.74	$ 9.62	$ 10.59	$ 11.66	$ 12.84	$ 13.10

Notes:

1. Mixed Nonresidential / Residential customer are billed at Nonresidential rates.
2. Low income senior citizen discount: 40% off applicable monthly fees.
3. Low income disabled persons discount: 40% off applicable monthly fees.
4. For services outside the city limits, the charges are 1.5 times the standard in-city rate.

SS 12.7 Affordability

The Washington State Department of Health and the Department of Commerce Public Works Board use an affordability index to prioritize low-cost loan awards depending on whether rates exceed 2.5 percent of the median household income for the service area. The average median household income for the City was $75,149 between 2018 and 2022, expressed in 2022 dollars, according to the U.S. Census Bureau. The 2022 value is escalated based on the actual rate of inflation in 2023 of 4.31 percent and the 4.0 – 3.0 percent inflation rate used in the financial forecast to project the median household income in future years. Table SS 12-9 presents the City's monthly sewer bill, projected to 2030 and tested against the 2.5 precent monthly affordability threshold.

Table SS 12-9
Community Affordability

Year	Inflation	Median HH Income	2.5% Monthly Threshold	Projected Monthly Bill	% of Median HH Income
2022		$ 75,149			
2023	4.31%	78,388			
2024	4.00%	81,523	$ 169.84	$ 92.15	1.36%
2025	4.00%	84,784	176.63	101.46	1.44%
2026	4.00%	88,176	183.70	111.71	1.52%
2027	3.00%	90,821	189.21	122.99	1.63%
2028	3.00%	93,546	194.89	135.41	1.74%
2029	3.00%	96,352	200.73	149.09	1.86%
2030	3.00%	99,243	206.76	152.07	1.84%

Applying the 2.5 percent monthly affordability test, the City's rates are forecasted to remain within the indicated affordability range through 2030.

SS 12.8 Conclusion

The results of this analysis indicate that at existing rate levels the utility will be deficient beginning in 2027. To keep pace with expenses and prepare for new debt obligations needed to fund system infrastructure needs an annual increase of 10.1 percent is projected between 2025 and 2029 and 2.0 in 2030.

It is recommended that the City regularly review and update the key underlying assumptions that compose the multi-year financial plan to ensure that adequate revenues are collected to meet the City's total financial obligations. The City has not conducted a detailed rate analysis since 2015. A more detailed rate study that will analyze and evaluate the City's rates, capital, operating, cash and debt service needs is planned to be conducted in 2026.

APPENDICES

THIS PAGE INTENTIONALLY BLANK

Appendix SS-A

NPDES Permit

THIS PAGE INTENTIONALLY BLANK

STATE OF WASHINGTON
DEPARTMENT OF ECOLOGY
Northwest Region Office
PO Box 330316, Shoreline, WA 98133-9716 • 206-594-0000

March 29, 2023

John Lande
City of Monroe Public Works
806 W Main Street
Monroe, WA 98272

Re: National Pollutant Discharge Elimination System (NPDES)
Permit No. WA0020486; City of Monroe Wastewater Treatment Plant (WWTP)

Dear John Lande:

The Washington State Department of Ecology (Ecology) acknowledges receiving a NPDES permit renewal application for the City of Monroe WWTP on December 29, 2022 and March 21, 2023. The application has been reviewed and accepted as complete on March 28, 2023.

Your current NPDES permit has an expiration date of November 30, 2023. Renewal of the permit is in process; however, the permit may not be issued by the expiration date. In accordance with the Washington State Administrative Procedures Act (RCW 34.05.422(3)) and Washington Administrative Code 173-220-180(5), if your new permit is not issued and effective by the current permit's expiration date, then the current permit and its terms and conditions are administratively extended and will remain in effect and enforceable until Ecology issues a new permit and it becomes effective for your facility.

If you have any questions regarding the development of your renewal permit, please contact Kevin Leung at (425) 200-8996 or by email at kevin.leung@ecy.wa.gov.

Sincerely,

Tricia Miller
Permit Coordinator
Northwest Region Office

Sent Via Electronic Mail - JLande@MonroeWA.gov

cc: Kevin Leung, Permit Manager, kevin.leung@ecy.wa.gov
PARIS: Monroe STP; WA0020486

Issuance Date: November 28, 2018
Effective Date: December 1, 2018
Expiration Date: November 30, 2023

National Pollutant Discharge Elimination System
Waste Discharge Permit No. WA0020486

State of Washington
DEPARTMENT OF ECOLOGY
Northwest Regional Office
3190 160th Avenue SE
Bellevue, WA 98008-5452

In compliance with the provisions of
The State of Washington Water Pollution Control Law
Chapter 90.48 Revised Code of Washington
and
The Federal Water Pollution Control Act
(The Clean Water Act)
Title 33 United States Code, Section 1342 et seq.

CITY OF MONROE
806 West Main Street
Monroe, WA 98272

is authorized to discharge in accordance with the Special and General Conditions that follow.

Plant Location: 522 South Sams Street Monroe, WA 98272	**Receiving Water:** Skykomish River
Treatment Type: Activated Sludge	**Discharge Location:** Latitude: 47.844501 Longitude: -121.974614

Rachel McCrea
Water Quality Section Manager
Northwest Regional Office
Washington State Department of Ecology

Table of Contents

Table of Contents *2*

Summary of Permit Report Submittals *4*

Special Conditions *5*

S1. Discharge limits **5**
S1.A. Effluent limits 5
S1.B. Mixing zone authorization 5

S2. Monitoring requirements **6**
S2.A. Monitoring schedule 6
S2.B. Sampling and analytical procedures 8
S2.C. Flow measurement and continuous monitoring devices 8
S2.D. Laboratory accreditation 8

S3. Reporting and recording requirements **9**
S3.A. Discharge monitoring reports 9
S3.B. Permit submittals and schedules 11
S3.C. Records retention 11
S3.D. Recording of results 11
S3.E. Additional monitoring by the Permittee 11
S3.F. Reporting permit violations 11
S3.G. Other reporting 13
S3.H. Maintaining a copy of this permit 13

S4. Facility loading **13**
S4.A. Design criteria 13
S4.B. Plans for maintaining adequate capacity 14
S4.C. Duty to mitigate 14
S4.D. Notification of new or altered sources 14

S5. Operation and maintenance **15**
S5.A. Certified operator 15
S5.B. Operation and maintenance program 15
S5.C. Short-term reduction 15
S5.D. Electrical power failure 16
S5.E. Prevent connection of inflow 16
S5.F. Bypass procedures 16
S5.G. Operations and maintenance (O&M) manual 18

S6. Pretreatment **19**
S6.A. General requirements 19
S6.B. Duty to enforce discharge prohibitions 19
S6.C. Wastewater discharge permit required 20
S6.D. Identification and reporting of existing, new, and proposed industrial users 20
S6.E. Industrial user survey 21

S7. Solid wastes **21**
S7.A. Solid waste handling 21
S7.B. Leachate 21

S8. Mixing study 21
S8.A. General requirements 21
S8.B. Reporting requirements 22
S8.C. Protocols 23
S9. Outfall evaluation 24
S10. Acute toxicity 24
S10.A. Testing when there is no permit limit for acute toxicity 24
S10.B. Sampling and reporting requirements 24
S11. Chronic toxicity 25
S11.A. Testing when there is no permit limit for chronic toxicity 25
S11.B. Sampling and reporting requirements 26
S12. Compliance schedule 27
S13. Application for permit renewal or modification for facility changes 27
General Conditions 28
G1. Signatory requirements 28
G2. Right of inspection and entry 29
G3. Permit actions 29
G4. Reporting planned changes 30
G5. Plan review required 31
G6. Compliance with other laws and statutes 31
G7. Transfer of this permit 31
G8. Reduced production for compliance 32
G9. Removed substances 32
G10. Duty to provide information 32
G11. Other requirements of 40 CFR 32
G12. Additional monitoring 32
G13. Payment of fees 32
G14. Penalties for violating permit conditions 32
G15. Upset 33
G16. Property rights 33
G17. Duty to comply 33
G18. Toxic pollutants 33
G19. Penalties for tampering 34
G20. Compliance schedules 34
G21. Service agreement review 34
Appendix A 35

Summary of Permit Report Submittals

Refer to the Special and General Conditions of this permit for additional submittal requirements.

Permit Section	Submittal	Frequency	First Submittal Date
S3.A	Discharge Monitoring Report (DMR)	Monthly	January 15, 2019
S3.A	Discharge Monitoring Report (DMR)	Quarterly	April 15, 2019
S3.A	Permit Renewal Application Monitoring Data	Annual	January 15, 2020
S3.A	DMR - Priority Pollutant Data - Single Sample Data	Annual	January 15, 2020
S3.F	Reporting Permit Violations	As necessary	
S4.B	Plans for Maintaining Adequate Capacity	As necessary	
S4.D	Notification of New or Altered Sources	As necessary	
S5.F	Bypass Notification	As necessary	
S5.G	Operations and Maintenance Manual Update	As necessary	
S6.E	Industrial User Survey	1/permit cycle	December 31, 2022
S8.A	Effluent Mixing Report	1/permit cycle	December 31, 2021
S9	Outfall Evaluation	1/permit cycle	December 31, 2022
S10.A	Acute Toxicity Effluent Test Results	2/permit cycle	April 15, 2022 October 15, 2022
S11.A	Chronic Toxicity Effluent Test Results	2/permit cycle	April 15, 2022 October 15, 2022
S12	Engineering Report	1/permit cycle	December 31, 2019
S12	Plans and Specifications	1/permit cycle	December 31, 2020
S12	Declaration of Construction of Water Pollution Control Facilities	1/permit cycle	December 31, 2022
S13	Application for Permit Renewal	1/permit cycle	December 31, 2022
G1	Notice of Change in Authorization	As necessary	
G4	Reporting Planned Changes	As necessary	
G5	Engineering Report for Construction or Modification Activities	As necessary	
G7	Notice of Permit Transfer	As necessary	
G10	Duty to Provide Information	As necessary	
G20	Compliance Schedules	As necessary	
G21	Contract Submittal	As necessary	

Special Conditions

S1. Discharge limits

S1.A. Effluent limits

All discharges and activities authorized by this permit must comply with the terms and conditions of this permit. The discharge of any of the following pollutants more frequently than, or at a level in excess of, that identified and authorized by this permit violates the terms and conditions of this permit.

Beginning on the effective date of this permit, the Permittee may discharge treated domestic wastewater to the Skykomish River at the permitted location subject to compliance with the following limits:

Effluent Limits: Outfall 001 Latitude: 47.844501, Longitude: -121.974614		
Parameter	**Average Monthly [a]**	**Average Weekly [b]**
Biochemical Oxygen Demand (5-day) (BOD_5)	30 milligrams/liter (mg/L) 711 pounds/day (lbs/day) 85% removal of influent BOD5	45 mg/L 1066 lbs/day
Total Suspended Solids (TSS)	30 mg/L 711 lbs/day 85% removal of influent TSS	45 mg/L 1066 lbs/day
Parameter	**Minimum**	**Maximum**
pH – INTERIM LIMIT [c]	6.0 standard units	9.0 standard units
pH – FINAL LIMIT [d]	6.7 standard units	9.0 standard units
Parameter	**Monthly Geometric Mean**	**Weekly Geometric Mean**
Fecal Coliform Bacteria [e]	100/100 milliliter (mL)	200/100 mL

[a]	Average monthly effluent limit means the highest allowable average of daily discharges over a calendar month. To calculate the discharge value to compare to the limit, you add the value of each daily discharge measured during a calendar month and divide this sum by the total number of daily discharges measured. See footnote c for fecal coliform calculations.
[b]	Average weekly discharge limit means the highest allowable average of daily discharges over a calendar week, calculated as the sum of all daily discharges measured during a calendar week divided by the number of daily discharges measured during that week. See footnote c for fecal coliform calculations.
[c]	Interim limits for pH will apply from the effective date of the permit through December 31, 2022.
[d]	Final limits for pH will be effective as of January 1, 2023.
[e]	Ecology provides directions to calculate the monthly and the weekly geometric mean in publication No. 04-10-020, Information Manual for Treatment Plant Operators available at: https://fortress.wa.gov/ecy/publications/SummaryPages/0410020.html

S1.B. Mixing zone authorization

Mixing zone for Outfall 001

The following paragraphs define the maximum boundaries of the mixing zones:

Chronic mixing zone

The width of the chronic mixing zone is limited to a distance of 81 feet. The length of the chronic mixing zone extends 100 feet upstream and 301feet downstream of the outfall. The mixing zone extends from the bottom to the top of the water column. The concentration of pollutants at the edge of the chronic zone must meet chronic aquatic life criteria and human health criteria.

Acute mixing zone

The width of the acute mixing zone is limited to the most restrictive of the following: 10 feet upstream and 30.1 feet downstream of the outfall, or 2.5% of the river flow. The mixing zone extends from the bottom to the top of the water column. The concentration of pollutants at the edge of the acute zone must meet acute aquatic life criteria.

Available Dilution (dilution factor)	
Acute Aquatic Life Criteria	8.0
Chronic Aquatic Life Criteria	16.8
Human Health Criteria - Carcinogen	16.8
Human Health Criteria - Non-carcinogen	16.8

S2. Monitoring requirements

S2.A. Monitoring schedule

The Permittee must monitor in accordance with the following schedule and the requirements specified in Appendix A.

Parameter	Units & Speciation	Minimum Sampling Frequency	Sample Type
(1) Wastewater influent			
Wastewater Influent means the raw sewage flow from the collection system into the treatment facility. Sample the wastewater entering the headworks of the treatment plant excluding any side-stream returns from inside the plant.			
Biochemical Oxygen Demand (BOD_5)	mg/L	3/week	24-hour composite [1]
Biochemical Oxygen Demand (BOD_5)	lbs/day	3/week	Calculated [2]
Total Suspended Solids (TSS)	mg/L	3/week	24-hour composite
Total Suspended Solids (TSS)	lbs/day	3/week	Calculated
(2) Final wastewater effluent			
Final Wastewater Effluent means wastewater exiting the last treatment process or operation. Typically, this is after or at the exit from the chlorine contact chamber or other disinfection process.			
Flow	MGD	Continuous [3]	Metered/recorded
BOD_5	mg/L	3/week	24-hour composite
BOD_5	lbs/day	3/week	Calculated
BOD_5	% removal [4]	1/month	Calculated
TSS	mg/L	3/week	24-hour composite
TSS	lbs/day	3/week	Calculated
TSS	% removal	1/month	Calculated
Fecal Coliform [5]	# /100 ml	3/week	Grab [6]
pH [7]	Standard Units	Daily	Grab

Parameter	Units & Speciation	Minimum Sampling Frequency	Sample Type
Temperature [8]	Degrees centigrade (°C)	Continuous	Measurement
7-DAD Max Temperature [9]	°C	Daily	Calculated
(3) Whole effluent toxicity testing – final wastewater effluent			
Acute Toxicity Testing	See Section S10	2/permit cycle	24-hour composite
Chronic Toxicity Testing	See Section S11	2/permit cycle	24-hour composite
(5) Effluent characterization – final wastewater effluent			
Total Phosphorus	mg/L as P	Quarterly [10]	24-hour composite
Soluble Reactive Phosphorus	mg/L as P	Quarterly	24-hour composite
Total Ammonia	mg/L as N	Quarterly	24-hour composite
Nitrate plus Nitrite Nitrogen	mg/L as N	Quarterly	24-hour composite
Total Kjeldahl Nitrogen (TKN)	mg/L as N	Quarterly	24-hour composite
(6) Permit renewal application requirements – final wastewater effluent			
The Permittee must record and report the wastewater treatment plant flow discharged on the day it collects the sample for priority pollutant testing with the discharge monitoring report.			
Dissolved Oxygen	mg/L	Once per year	Grab
Oil and Grease	mg/L	Once per year	Grab
Total Dissolved Solids	mg/L	Once per year	24-hour composite
Total Hardness	mg/L	Once per year	24-hour composite
Cyanide	micrograms/liter (µg/L)		Grab
Total Phenolic Compounds	µg/L		Grab
Priority Pollutants (PP) – Total Metals	µg/L; nanograms (ng/L) for mercury	Once per year	24-hour composite Grab for mercury
PP – Volatile Organic Compounds	µg/L	Once per year	Grab
PP – Acid-extractable Compounds	µg/L	Once per year	24-hour composite
PP – Base-neutral Compounds	µg/L	Once per year	24-hour composite

1	24-hour composite means a series of individual samples collected over a 24-hour period into a single container, and analyzed as one sample.
2	Calculated means figured concurrently with the respective sample, using the following formula: Concentration (in mg/L) X Flow (in MGD) X Conversion Factor (8.34) = lbs/day
3	Continuous means uninterrupted except for brief lengths of time for calibration, power failure, or unanticipated equipment repair or maintenance. The time interval for the associated data logger must be no greater than 30 minutes.
4	% removal = $\frac{\text{Influent concentration (mg/L)} - \text{Effluent concentration (mg/L)}}{\text{Influent concentration (mg/L)}} \times 100$ Calculate the percent (%) removal of BOD_5 and TSS using the above equation.
5	Report a numerical value for fecal coliforms following the procedures in Ecology's *Information Manual for Wastewater Treatment Plant Operators*, Publication Number 04-10-020 available at: http://www.ecy.wa.gov/programs/wq/permits/guidance.html . Do not report a result as too numerous to count (TNTC).
6	Grab means an individual sample collected over a fifteen (15)-minute, or less, period.
7	Report the daily pH and the minimum and maximum for the monitoring period.
8	The Permittee must determine and report a daily maximum from half-hour measurements in a 24-hour period. Continuous monitoring instruments must achieve an accuracy of 0.2°C and the Permittee must verify accuracy annually.
9	Calculate a 7-DAD Max for each day by averaging each days maximum temperature value with the daily maximum temperatures of the three (3) days prior and the three (3) days after that specific date.
10	Quarterly sampling periods are January through March, April through June, July through September, and October through December. The Permittee must begin quarterly monitoring for the quarter beginning on January 1, 2019, and submit results by April 15, 2019.

S2.B. Sampling and analytical procedures

Samples and measurements taken to meet the requirements of this permit must represent the volume and nature of the monitored parameters. The Permittee must conduct representative sampling of any unusual discharge or discharge condition, including bypasses, upsets, and maintenance-related conditions that may affect effluent quality.

Sampling and analytical methods used to meet the monitoring requirements specified in this permit must conform to the latest revision of the *Guidelines Establishing Test Procedures for the Analysis of Pollutants* contained in 40 CFR Part 136 (or as applicable in 40 CFR subchapters N [Parts 400–471] or O [Parts 501-503]) unless otherwise specified in this permit . Ecology may only specify alternative methods for parameters without permit limits and for those parameters without an EPA approved test method in 40 CFR Part 136.

S2.C. Flow measurement and continuous monitoring devices

The Permittee must:

1. Select and use appropriate flow measurement and continuous monitoring devices and methods consistent with accepted scientific practices.
2. Install, calibrate, and maintain these devices to ensure the accuracy of the measurements is consistent with the accepted industry standard, the manufacturer's recommendation, and approved O&M manual procedures for the device and the wastestream.
3. Calibrate continuous monitoring instruments weekly unless it can demonstrate a longer period is sufficient based on monitoring records. The Permittee:
    a. May calibrate apparatus for continuous monitoring of dissolved oxygen by air calibration.
    b. Must calibrate continuous pH measurement instruments using a grab sample analyzed in the lab with a pH meter calibrated with standard buffers and analyzed within 15 minutes of sampling.
    c. Must calibrate continuous chlorine measurement instruments using a grab sample analyzed in the laboratory within 15 minutes of sampling.
4. Calibrate flow-monitoring devices at a minimum frequency of at least one calibration per year.
5. Maintain calibration records for at least three years.

S2.D. Laboratory accreditation

The Permittee must ensure that all monitoring data required by Ecology for permit specified parameters is prepared by a laboratory registered or accredited under the provisions of chapter 173-50 WAC, *Accreditation of Environmental Laboratories*. Flow, temperature, settleable solids, conductivity, pH, and internal process control parameters are exempt from this requirement. The Permittee must obtain accreditation for conductivity and pH if it must receive accreditation or registration for other parameters.

S3. Reporting and recording requirements

The Permittee must monitor and report in accordance with the following conditions. Falsification of information submitted to Ecology is a violation of the terms and conditions of this permit.

S3.A. Discharge monitoring reports

The first monitoring period begins on the effective date of the permit (unless otherwise specified). The Permittee must:

1. Summarize, report, and submit monitoring data obtained during each monitoring period on the electronic discharge monitoring report (DMR) form provided by Ecology within the Water Quality Permitting Portal. Include data for each of the parameters tabulated in Special Condition S2 and as required by the form. Report a value for each day sampling occurred (unless specifically exempted in the permit) and for the summary values (when applicable) included on the electronic form.
2. Ensure that DMRs are electronically submitted no later than the dates specified below, unless otherwise specified in this permit.
3. The Permittee must also submit an electronic copy of the laboratory report as an attachment using WQWebDMR. The contract laboratory reports must also include information on the chain of custody, QA/QC results, and documentation of accreditation for the parameter.
4. Submit DMRs for parameters with the monitoring frequencies specified in S2 (monthly, quarterly, annual, etc.) at the reporting schedule identified below. The Permittee must:
    a. Submit **monthly** DMRs by the 15th day of the following month.
    b. Submit **quarterly DMRs**, unless otherwise specified in the permit, by the 15th day of the month following the monitoring period. Quarterly sampling periods are January through March, April through June, July through September, and October through December. The Permittee must submit the first quarterly DMR on April 15, 2019 for the quarter beginning on January 1, 2019.
    c. Submit **annual DMRs**, unless otherwise specified in the permit, by January 15 for the previous calendar year. The annual sampling period is the calendar year.
5. Enter the "No Discharge" reporting code for an entire DMR, for a specific monitoring point, or for a specific parameter as appropriate, if the Permittee did not discharge wastewater or a specific pollutant during a given monitoring period.

6. Report single analytical values below detection as "less than the detection level (DL)" by entering < followed by the numeric value of the detection level (e.g. < 2.0) on the DMR. If the method used did not meet the minimum DL and quantitation level (QL) identified in the permit, report the actual QL and DL in the comments or in the location provided.
7. Report single analytical values between the detection level (DL) and the quantitation level (QL) by entering the estimated value, the code for estimated value/below quantitation limit (j) and any additional information in the comments. Submit a copy of the laboratory report as an attachment using WQWebDMR.
8. Not report zero for bacteria monitoring. Report as required by the laboratory method.
9. Calculate and report an arithmetic average value for each day for bacteria if multiple samples were taken in one day.
10. Calculate the geometric mean values for bacteria (unless otherwise specified in the permit) using:
    a. The reported numeric value for all bacteria samples measured above the detection value except when it took multiple samples in one day. If the Permittee takes multiple samples in one day it must use the arithmetic average for the day in the geometric mean calculation.
    b. The detection value for those samples measured below detection.
11. Report the test method used for analysis in the comments if the laboratory used an alternative method not specified in the permit and as allowed in Appendix A OR S2.
12. Calculate average values and calculated total values (unless otherwise specified in the permit) using:
    a. The reported numeric value for all parameters measured between the detection value and the quantitation value for the sample analysis.
    b. One-half the detection value (for values reported below detection) if the lab detected the parameter in another sample from the same monitoring point for the reporting period.
    c. Zero (for values reported below detection) if the lab did not detect the parameter in another sample for the reporting period.
13. Report single-sample grouped parameters (for example: priority pollutants, PAHs, pulp and paper chlorophenolics, TTOs) on the WQWebDMR form and include: sample date, concentration detected, detection limit (DL) (as necessary), and laboratory quantitation level (QL) (as necessary).

S3.B. Permit submittals and schedules

The Permittee must use the Water Quality Permitting Portal – Permit Submittals application (unless otherwise specified in the permit) to submit all other written permit-required reports by the date specified in the permit.

When another permit condition requires submittal of a paper (hard-copy) report, the Permittee must ensure that it is postmarked or received by Ecology no later than the dates specified by this permit. Send these paper reports to Ecology at:

Water Quality Permit Coordinator
Washington State Department of Ecology
Northwest Regional Office
3190 160th Avenue SE
Bellevue, WA 98008-5452

S3.C. Records retention

The Permittee must retain records of all monitoring information for a minimum of three (3) years. Such information must include all calibration and maintenance records and all original recordings for continuous monitoring instrumentation, copies of all reports required by this permit, and records of all data used to complete the application for this permit. The Permittee must extend this period of retention during the course of any unresolved litigation regarding the discharge of pollutants by the Permittee or when requested by Ecology.

S3.D. Recording of results

For each measurement or sample taken, the Permittee must record the following information:

1. The date, exact place, method, and time of sampling or measurement.
2. The individual who performed the sampling or measurement.
3. The dates the analyses were performed.
4. The individual who performed the analyses.
5. The analytical techniques or methods used.
6. The results of all analyses.

S3.E. Additional monitoring by the Permittee

If the Permittee monitors any pollutant more frequently than required by Special Condition S2 of this permit, then the Permittee must include the results of such monitoring in the calculation and reporting of the data submitted in the Permittee's DMR unless otherwise specified by Special Condition S2.

S3.F. Reporting permit violations

The Permittee must take the following actions when it violates or is unable to comply with any permit condition:

1. Immediately take action to stop, contain, and cleanup unauthorized discharges or otherwise stop the noncompliance and correct the problem.

2. If applicable, immediately repeat sampling and analysis. Submit the results of any repeat sampling to Ecology within thirty (30) days of sampling.

a. Immediate reporting

The Permittee must **immediately** report to Ecology and the Local Health Jurisdiction (at the numbers listed below), all:

- Failures of the disinfection system.
- Collection system overflows.
- Plant bypasses resulting in a discharge.
- Any other failures of the sewage system (pipe breaks, etc).

Northwest Regional Office	425-649-7000
Snohomish Health District	425-339-5252
Snohomish Health District	425-339-5295 (after hours)

Additionally, for any sanitary sewer overflow (SSO) that discharges to a municipal separate storm sewer system (MS4), the Permittee must notify the appropriate MS4 owner or operator.

b. Twenty-four-hour reporting

The Permittee must report the following occurrences of noncompliance by telephone, to Ecology at the telephone numbers listed above, within 24 hours from the time the Permittee becomes aware of any of the following circumstances:

1. Any noncompliance that may endanger health or the environment, unless previously reported under immediate reporting requirements.
2. Any unanticipated bypass that causes an exceedance of an effluent limit in the permit (See Part S5.F, “Bypass Procedures”).
3. Any upset that causes an exceedance of an effluent limit in the permit (See G.15, “Upset”).
4. Any violation of a maximum daily or instantaneous maximum discharge limit for any of the pollutants in Section S1.A of this permit.
5. Any overflow prior to the treatment works, whether or not such overflow endangers health or the environment or exceeds any effluent limit in the permit.

c. Report within five days

The Permittee must also submit a written report within five days of the time that the Permittee becomes aware of any reportable event under subparts a or b, above. The report must contain:

1. A description of the noncompliance and its cause.
2. The period of noncompliance, including exact dates and times.

3. The estimated time the Permittee expects the noncompliance to continue if not yet corrected.
4. Steps taken or planned to reduce, eliminate, and prevent recurrence of the noncompliance.
5. If the noncompliance involves an overflow prior to the treatment works, an estimate of the quantity (in gallons) of untreated overflow.

d. Waiver of written reports

Ecology may waive the written report required in subpart c, above, on a case-by-case basis upon request if the Permittee has submitted a timely oral report.

e. All other permit violation reporting

The Permittee must report all permit violations, which do not require immediate or within 24 hours reporting, when it submits monitoring reports for S3.A ("Reporting"). The reports must contain the information listed in subpart c, above. Compliance with these requirements does not relieve the Permittee from responsibility to maintain continuous compliance with the terms and conditions of this permit or the resulting liability for failure to comply.

S3.G. Other reporting

a. Spills of oil or hazardous materials

The Permittee must report a spill of oil or hazardous materials in accordance with the requirements of RCW 90.56.280 and chapter 173-303-145. You can obtain further instructions at the following website: http://www.ecy.wa.gov/programs/spills/other/reportaspill.htm .

b. Failure to submit relevant or correct facts

Where the Permittee becomes aware that it failed to submit any relevant facts in a permit application, or submitted incorrect information in a permit application, or in any report to Ecology, it must submit such facts or information promptly.

S3.H. Maintaining a copy of this permit

The Permittee must keep a copy of this permit at the facility and make it available upon request to Ecology inspectors.

S4. Facility loading

S4.A. Design criteria

The flows or waste loads for the permitted facility must not exceed the following design criteria:

Maximum Month Design Flow (MMDF)	2.84 MGD
BOD_5 Influent Loading for Maximum Month	6,090 lbs/day
TSS Influent Loading for Maximum Month	5,940 lbs/day

S4.B. Plans for maintaining adequate capacity

a. Conditions triggering plan submittal

The Permittee must submit a plan and a schedule for continuing to maintain capacity to Ecology when:

1. The actual flow or waste load reaches 85 percent of any one of the design criteria in S4.A for three consecutive months.
2. The projected plant flow or loading would reach design capacity within five years.

b. Plan and schedule content

The plan and schedule must identify the actions necessary to maintain adequate capacity for the expected population growth and to meet the limits and requirements of the permit. The Permittee must consider the following topics and actions in its plan.

1. Analysis of the present design and proposed process modifications
2. Reduction or elimination of excessive infiltration and inflow of uncontaminated ground and surface water into the sewer system
3. Limits on future sewer extensions or connections or additional waste loads
4. Modification or expansion of facilities
5. Reduction of industrial or commercial flows or waste loads

Engineering documents associated with the plan must meet the requirements of WAC 173-240-060, "Engineering Report," and be approved by Ecology prior to any construction.

S4.C. Duty to mitigate

The Permittee must take all reasonable steps to minimize or prevent any discharge or sludge use or disposal in violation of this permit that has a reasonable likelihood of adversely affecting human health or the environment.

S4.D. Notification of new or altered sources

1. The Permittee must submit written notice to Ecology whenever any new discharge or a substantial change in volume or character of an existing discharge into the wastewater treatment plant is proposed which:
   a. Would interfere with the operation of, or exceed the design capacity of, any portion of the wastewater treatment plant.
   b. Is not part of an approved general sewer plan or approved plans and specifications.
   c. Is subject to pretreatment standards under 40 CFR Part 403 and Section 307(b) of the Clean Water Act.

2. This notice must include an evaluation of the wastewater treatment plant's ability to adequately transport and treat the added flow and/or waste load, the quality and volume of effluent to be discharged to the treatment plant, and the anticipated impact on the Permittee's effluent [40 CFR 122.42(b)].

S5. Operation and maintenance

The Permittee must at all times properly operate and maintain all facilities and systems of treatment and control (and related appurtenances), which are installed to achieve compliance with the terms and conditions of this permit. Proper operation and maintenance also includes keeping a daily operation logbook (paper or electronic), adequate laboratory controls, and appropriate quality assurance procedures. This provision of the permit requires the Permittee to operate backup or auxiliary facilities or similar systems only when the operation is necessary to achieve compliance with the conditions of this permit.

S5.A. Certified operator

This permitted facility must be operated by an operator certified by the state of Washington for at least a Class III plant. This operator must be in responsible charge of the day-to-day operation of the wastewater treatment plant. An operator certified for at least a Class II plant must be in charge during all regularly scheduled shifts.

S5.B. Operation and maintenance program

The Permittee must:

1. Institute an adequate operation and maintenance program for the entire sewage system.
2. Keep maintenance records on all major electrical and mechanical components of the treatment plant, as well as the sewage system and pumping stations. Such records must clearly specify the frequency and type of maintenance recommended by the manufacturer and must show the frequency and type of maintenance performed.
3. Make maintenance records available for inspection at all times.

S5.C. Short-term reduction

The Permittee must schedule any facility maintenance, which might require interruption of wastewater treatment and degrade effluent quality, during non-critical water quality periods and carry this maintenance out according to the approved O&M manual or as otherwise approved by Ecology.

If a Permittee contemplates a reduction in the level of treatment that would cause a violation of permit discharge limits on a short-term basis for any reason, and such reduction cannot be avoided, the Permittee must:

1. Give written notification to Ecology, if possible, thirty (30) days prior to such activities.

2. Detail the reasons for, length of time of, and the potential effects of the reduced level of treatment.

This notification does not relieve the Permittee of its obligations under this permit.

S5.D. Electrical power failure

The Permittee must ensure that adequate safeguards prevent the discharge of untreated wastes or wastes not treated in accordance with the requirements of this permit during electrical power failure at the treatment plant and/or sewage lift stations. Adequate safeguards include, but are not limited to, alternate power sources, standby generator(s), or retention of inadequately treated wastes.

The Permittee must maintain Reliability Class II (EPA 430-99-74-001) at the wastewater treatment plant. Reliability Class II requires a backup power source sufficient to operate all vital components and critical lighting and ventilation during peak wastewater flow conditions. Vital components used to support the secondary processes (i.e., mechanical aerators or aeration basin air compressors) need not be operable to full levels of treatment, but must be sufficient to maintain the biota.

S5.E. Prevent connection of inflow

The Permittee must strictly enforce its sewer ordinances and not allow the connection of inflow (roof drains, foundation drains, etc.) to the sanitary sewer system.

S5.F. Bypass procedures

A bypass is the intentional diversion of waste streams from any portion of a treatment facility. This permit prohibits all bypasses except when the bypass is for essential maintenance, as authorized in special condition S5.F.1, or is approved by Ecology as an anticipated bypass following the procedures in S5.F.2.

1. Bypass for essential maintenance without the potential to cause violation of permit limits or conditions.

   This permit allows bypasses for essential maintenance of the treatment system when necessary to ensure efficient operation of the system. The Permittee may bypass the treatment system for essential maintenance only if doing so does not cause violations of effluent limits. The Permittee is not required to notify Ecology when bypassing for essential maintenance. However the Permittee must comply with the monitoring requirements specified in special condition S2.B.

2. Anticipated bypasses for non-essential maintenance

   Ecology may approve an anticipated bypass under the conditions listed below. This permit prohibits any anticipated bypass that is not approved through the following process.

a. If a bypass is for non-essential maintenance, the Permittee must notify Ecology, if possible, at least ten (10) days before the planned date of bypass. The notice must contain:

- A description of the bypass and the reason the bypass is necessary.
- An analysis of all known alternatives which would eliminate, reduce, or mitigate the potential impacts from the proposed bypass.
- A cost-effectiveness analysis of alternatives.
- The minimum and maximum duration of bypass under each alternative.
- A recommendation as to the preferred alternative for conducting the bypass.
- The projected date of bypass initiation.
- A statement of compliance with SEPA.
- A request for modification of water quality standards as provided for in WAC 173-201A-410, if an exceedance of any water quality standard is anticipated.
- Details of the steps taken or planned to reduce, eliminate, and prevent recurrence of the bypass.

b. For probable construction bypasses, the Permittee must notify Ecology of the need to bypass as early in the planning process as possible. The Permittee must consider the analysis required above during the project planning and design process. The project-specific engineering report as well as the plans and specifications must include details of probable construction bypasses to the extent practical. In cases where the Permittee determines the probable need to bypass early, the Permittee must continue to analyze conditions up to and including the construction period in an effort to minimize or eliminate the bypass.

c. Ecology will determine if the Permittee has met the conditions of special condition S5.F.2 a and b and consider the following prior to issuing a determination letter, an administrative order, or a permit modification as appropriate for an anticipated bypass:

- If the Permittee planned and scheduled the bypass to minimize adverse effects on the public and the environment.
- If the bypass is unavoidable to prevent loss of life, personal injury, or severe property damage. “Severe property damage” means substantial physical damage to property, damage to the treatment facilities which would cause them to become inoperable, or substantial and permanent loss of natural resources which can reasonably be expected to occur in the absence of a bypass.
- If feasible alternatives to the bypass exist, such as:
  - The use of auxiliary treatment facilities.

- Retention of untreated wastes.
- Stopping production.
- Maintenance during normal periods of equipment downtime, but not if the Permittee should have installed adequate backup equipment in the exercise of reasonable engineering judgment to prevent a bypass which occurred during normal periods of equipment downtime or preventative maintenance.
- Transport of untreated wastes to another treatment facility.

S5.G. Operations and maintenance (O&M) manual

a. O&M manual submittal and requirements

The Permittee must:

1. Review the O&M Manual at least annually.
2. Submit to Ecology for review substantial changes or updates to the O&M Manual whenever it incorporates them into the manual.
3. Keep the approved O&M Manual at the permitted facility.
4. Follow the instructions and procedures of this manual.

b. O&M manual components

In addition to the requirements of WAC 173-240-080(1) through (5), the O&M Manual must be consistent with the guidance in Table G1-3 in the *Criteria for Sewage Works Design* (Orange Book), 2008. The O&M Manual must include:

1. Emergency procedures for cleanup in the event of wastewater system upset or failure.
2. A review of system components which if failed could pollute surface water or could impact human health. Provide a procedure for a routine schedule of checking the function of these components.
3. Wastewater system maintenance procedures that contribute to the generation of process wastewater.
4. Reporting protocols for submitting reports to Ecology to comply with the reporting requirements in the discharge permit.
5. Any directions to maintenance staff when cleaning or maintaining other equipment or performing other tasks which are necessary to protect the operation of the wastewater system (for example, defining maximum allowable discharge rate for draining a tank, blocking all floor drains before beginning the overhaul of a stationary engine).
6. The treatment plant process control monitoring schedule.
7. Minimum staffing adequate to operate and maintain the treatment processes and carry out compliance monitoring required by the permit.

S6. Pretreatment

S6.A. General requirements

The Permittee must work with Ecology to ensure that all commercial and industrial users of the publicly owned treatment works (POTW) comply with the pretreatment regulations in 40 CFR Part 403 and any additional regulations that the Environmental Protection Agency (U.S. EPA) may promulgate under Section 307(b) (pretreatment) and 308 (reporting) of the Federal Clean Water Act.

S6.B. Duty to enforce discharge prohibitions

1. Under federal regulations (40 CFR 403.5(a) and (b)), the Permittee must not authorize or knowingly allow the discharge of any pollutants into its POTW which may be reasonably expected to cause pass through or interference, or which otherwise violate general or specific discharge prohibitions contained in 40 CFR Part 403.5 or WAC 173-216-060.
2. The Permittee must not authorize or knowingly allow the introduction of any of the following into their treatment works:
    a. Pollutants which create a fire or explosion hazard in the POTW (including, but not limited to waste streams with a closed cup flashpoint of less than 140 degrees Fahrenheit or 60 degrees Centigrade using the test methods specified in 40 CFR 261.21).
    b. Pollutants which will cause corrosive structural damage to the POTW, but in no case discharges with pH lower than 5.0, or greater than 11.0 standard units, unless the works are specifically designed to accommodate such discharges.
    c. Solid or viscous pollutants in amounts that could cause obstruction to the flow in sewers or otherwise interfere with the operation of the POTW.
    d. Any pollutant, including oxygen-demanding pollutants, (BOD_5, etc.) released in a discharge at a flow rate and/or pollutant concentration which will cause interference with the POTW.
    e. Petroleum oil, non-biodegradable cutting oil, or products of mineral origin in amounts that will cause interference or pass through.
    f. Pollutants which result in the presence of toxic gases, vapors, or fumes within the POTW in a quantity which may cause acute worker health and safety problems.
    g. Heat in amounts that will inhibit biological activity in the POTW resulting in interference but in no case heat in such quantities such that the temperature at the POTW headworks exceeds 40 degrees Centigrade (104 degrees Fahrenheit) unless Ecology, upon request of the Permittee, approves, in writing, alternate temperature limits.
    h. Any trucked or hauled pollutants, except at discharge points designated by the Permittee.

i. Wastewaters prohibited to be discharged to the POTW by the Dangerous Waste Regulations (chapter 173-303 WAC), unless authorized under the Domestic Sewage Exclusion (WAC 173-303-071).

3. The Permittee must also not allow the following discharges to the POTW unless approved in writing by Ecology:

   a. Noncontact cooling water in significant volumes.

   b. Stormwater and other direct inflow sources.

   c. Wastewaters significantly affecting system hydraulic loading, which do not require treatment, or would not be afforded a significant degree of treatment by the system.

4. The Permittee must notify Ecology if any industrial user violates the prohibitions listed in this section (S6.B), and initiate enforcement action to promptly curtail any such discharge.

S6.C. Wastewater discharge permit required

The Permittee must:

1. Establish a process for authorizing non-domestic wastewater discharges that ensures all SIUs in all tributary areas meet the applicable state waste discharge permit (SWDP) requirements in accordance with chapter 90.48 RCW and chapter 173-216 WAC.

2. Immediately notify Ecology of any proposed discharge of wastewater from a source, which may be a significant industrial user (SIU) [see fact sheet definitions or refer to 40 CFR 403.3(v)(i)(ii)].

3. Require all SIUs to obtain a SWDP from Ecology prior to accepting their non-domestic wastewater, or require proof that Ecology has determined they do not require a permit.

4. Require the documentation as described in S6.C.3 at the earliest practicable date as a condition of continuing to accept non-domestic wastewater discharges from a previously undiscovered, currently discharging and unpermitted SIU.

5. Require sources of non-domestic wastewater, which do not qualify as SIUs but merit a degree of oversight, to apply for a SWDP and provide it a copy of the application and any Ecology responses.

6. Keep all records documenting that its users have met the requirements of S6.C.

S6.D. Identification and reporting of existing, new, and proposed industrial users

1. The Permittee must take continuous, routine measures to identify all existing, new, and proposed SIUs and potential significant industrial users (PSIUs) discharging or proposing to discharge to the Permittee's sewer system (see **Appendix C** of the fact sheet for definitions).

2. Within 30 days of becoming aware of an unpermitted existing, new, or proposed industrial user who may be a significant industrial user (SIU), the Permittee must notify such user by registered mail that, if classified as an SIU, they must apply to Ecology and obtain a State Waste Discharge Permit. The Permittee must send a copy of this notification letter to Ecology within this same 30-day period.
3. The Permittee must also notify all Potential SIUs (PSIUs), as they are identified, that if their classification should change to an SIU, they must apply to Ecology for a State Waste Discharge Permit within 30 days of such change.

S6.E. Industrial user survey

The Permittee must complete an industrial user survey listing all SIUs and potential significant industrial users (PSIUs) discharging to the POTW. The Permittee must submit the survey to Ecology by December 31, 2022. At a minimum, the Permittee must develop the list of SIUs and PSIUs by means of a telephone book search, a water utility billing records search, and a physical reconnaissance of the service area. Information on PSIUs must include, at a minimum, the business name, telephone number, address, description of the industrial process(s), and the known wastewater volumes and characteristics.

For industrial users for which there are potentially significant non-domestic discharges, the Permittee must obtain and include in the report the minimum information described in the paragraph above for PSIUs.

S7. Solid wastes

S7.A. Solid waste handling

The Permittee must handle and dispose of all solid waste material in such a manner as to prevent its entry into state ground or surface water.

S7.B. Leachate

The Permittee must not allow leachate from its solid waste material to enter state waters without providing all known, available, and reasonable methods of treatment, nor allow such leachate to cause violations of the State Surface Water Quality Standards, Chapter 173-201A WAC, or the State Ground Water Quality Standards, Chapter 173-200 WAC.

S8. Mixing study

S8.A. General requirements

The Permittee must

1. Update the Effluent Mixing Zone Study (Cosmopolitan, 2009). Submit a Plan of Study to Ecology for review by December 31, 2020, prior to initiation of the effluent mixing study.
2. Use the Guidance for Conducting Mixing Zone Analyses (Appendix C of Ecology's *Permit Writer's Manual*, 2015) and the protocols identified in S8.C.

3. Include the results of the effluent mixing study in the Effluent Mixing Report and submit it to Ecology for approval by December 31, 2021.
4. If the results of the mixing study, toxicity tests, and chemical analysis indicate that the concentration of any pollutant(s) exceeds or has a reasonable potential to exceed the state water quality standards, chapter 173-201A WAC, Ecology may modify this permit to impose effluent limits to meet the water quality standards.

S8.B. Reporting requirements

The mixing zone study must include:

1. A statement confirming that AKART has been applied to the discharge.
2. A description of the size of the mixing zone allowed under WAC 173-201A.
3. An analysis showing how mixing zones have been minimized based on using the lowest dilution from hydraulic limitation, width limitations, distance limitation and that predicted by the model.
4. A clear description of the critical conditions used for dilution factors:
    a. For ambient freshwater (unidirectional flow) use 7Q10 flows for acute, chronic and non-carcinogen pollutants, and harmonic flow for carcinogens.
    b. Generally, use depth of outfall at 7Q10 flows for rivers. For assessing human health in freshwater, depths of outfall should be established at the applicable flow (e.g. harmonic mean flow or 30Q5 flows).
    c. For unidirectional flow use centerline dilution factor for acute and chronic conditions, and flux average for human health dilution factors.
5. Diffuser information:
    a. Location, orientation, description and dimension of diffusers and ports.
    b. Port elevation above bottom and the depth of the diffuser/port below water surface based on 7Q10 flow for rivers.
    c. Plan view maps showing the mixing zone size and dimensions in relation to the diffuser.
    d. Schematic of waterbody cross-section, showing channel width, depth, and diffuser location in relation to shoreline and bottom.
    e. Report on the integrity of the diffuser and the ports being modeled.
6. Discharge characteristics:
    a. Existing and projected maximum daily, maximum monthly average, and annual average flows.
    b. Discharge density (temperature and salinity).
7. Ambient water characteristics:
    a. Critical stream flow statistics (7Q10, 30Q5, harmonic flow).
    b. Velocity profile in the vicinity of the diffuser.

c. Manning's roughness coefficient, if used.

d. Available information regarding background concentrations of chemical substances in the receiving water for which there are criteria in chapter 173-201A WAC.

8. Model selection and results:

a. Model selection and application discussion. Consider model applicability to single or multiport diffuser, opposing port configuration, submerged, surface or above-surface discharge, buoyant or non-buoyant discharge, and potential plume attachment to boundaries.

b. Description of mixing and plume dynamics (nearfield, farfield, tidal buildup/reflux).

c. Sensitivity analysis.

d. Calibration to empirical data (tracer studies), if applicable.

e. Provide model output and summary table of results.

S8.C. Protocols

The Permittee must determine the dilution ratio using protocols outlined in the following references, approved modifications thereof, or by another method approved by Ecology:

1. Doneker, R.L. and G.H. Jirka, *CORMIX User Manual: A Hydrodynamic Mixing Zone Model and Decision Support System for Pollutant Discharges into Surface Waters*, EPA-823-K-07-001, Dec. 2007. http://www.mixzon.com/downloads/.

   A complete list of general reference for CORMIX is at: http://www.cormix.info/references.php

2. Frick, W.E., Roberts, P.J.W., Davis, L.R., Keyes, D.J., Baumgartner, George, K.P. 2003. *Dilution Models for Effluent Discharges, 4th Edition (Visual Plumes).* Ecosystems Research Div., USEPA, Athens, GA, USA.

3. Ecology, Water Quality Program, *Permit Writer's Manual*. 2015. Washington State Department of Ecology. Publication No. 92-109, Revised January 2015. https://fortress.wa.gov/ecy/publications/summarypages/92109.html.

4. Ecology, Guidance for conducting mixing zone analysis (Appendix C, Water Quality Program *Permit Writer's Manual*. 2015). https://fortress.wa.gov/ecy/publications/summarypages/92109.html.

5. Kilpatrick, F.A., and E.D. Cobb, *Measurement of Discharge Using Tracers, Chapter A16, Techniques of Water-Resources Investigations of the USGS*, Book 3, Application of Hydraulics, USGS, U.S. Department of the Interior, Reston, VA, 1985.

6. Wilson, J.F., E.D. Cobb, and F.A. Kilpatrick, *Fluorometric Procedures for Dye Tracing, Chapter A12. Techniques of Water-Resources Investigations of the USGS*, Book 3, Application of Hydraulics, USGS, U.S. Department of the Interior, Reston, VA, 1986.

S9. Outfall evaluation

The Permittee must inspect the submerged portion of the outfall line and diffuser to document its integrity and continued function. If conditions allow for a photographic verification, the Permittee must include such verification in the report. By December 31, 2022, the Permittee must submit the inspection report to Ecology through the Water Quality Permitting Portal – Permit Submittals application.

The inspector must at a minimum:

- Assess the physical condition of the outfall pipe, diffuser, and associated couplings.
- Determine the extent of sediment accumulation in the vicinity of the diffuser.
- Ensure diffuser ports are free of obstructions and are allowing uniform flow.
- Confirm physical location (latitude/longitude) of the diffuser section of the outfall.
- Assess physical condition of anchors used to secure the outfall pipe and diffuser sections.

S10. Acute toxicity

S10.A. Testing when there is no permit limit for acute toxicity

The Permittee must:

1. Conduct acute toxicity testing on final effluent two times, during the following quarters:
   a. January - March 2022.
   b. July - September 2022.
2. Conduct acute toxicity testing on a series of at least five concentrations of effluent, including 100% effluent and a control.
3. Use each of the following species and protocols for each acute toxicity test:

Acute Toxicity Tests	Species	Method
Fathead minnow 96-hour static-renewal test	*Pimephales promelas*	EPA-821-R-02-012
Daphnid 48-hour static test	*Ceriodaphnia dubia, Daphnia pulex,* or *Daphnia magna*	EPA-821-R-02-012

4. Submit the results electronically to Ecology using the Water Quality Permitting Portal – Permit Submittals application by April 15, 2022, and October 15, 2022.

S10.B. Sampling and reporting requirements

1. The Permittee must submit all reports for toxicity testing in accordance with the most recent version of Ecology Publication No. WQ-R-95-80, *Laboratory Guidance and Whole Effluent Toxicity Test Review Criteria*. Reports must contain toxicity data, bench sheets, and reference toxicant results for test methods. In addition, the Permittee must submit toxicity test data in electronic format (CETIS export file preferred) for entry into Ecology's database.

2. The Permittee must collect 24-hour composite effluent samples for toxicity testing. The Permittee must cool the samples to 0 - 6 degrees Celsius during collection and send them to the lab immediately upon completion. The lab must begin the toxicity testing as soon as possible but no later than 36 hours after sampling was completed.
3. The laboratory must conduct water quality measurements on all samples and test solutions for toxicity testing, as specified in the most recent version of Ecology Publication No. WQ-R-95-80, *Laboratory Guidance and Whole Effluent Toxicity Test Review Criteria*.
4. All toxicity tests must meet quality assurance criteria and test conditions specified in the most recent versions of the EPA methods listed in Subsection C and the Ecology Publication No. WQ-R-95-80, *Laboratory Guidance and Whole Effluent Toxicity Test Review Criteria*. If Ecology determines any test results to be invalid or anomalous, the Permittee must repeat the testing with freshly collected effluent.
5. The laboratory must use control water and dilution water meeting the requirements of the EPA methods listed in Section A or pristine natural water of sufficient quality for good control performance.
6. The Permittee must conduct whole effluent toxicity tests on an unmodified sample of final effluent.
7. The Permittee may choose to conduct a full dilution series test during compliance testing in order to determine dose response. In this case, the series must have a minimum of five effluent concentrations and a control. The series of concentrations must include the acute critical effluent concentration (ACEC). The ACEC equals 12.5% effluent.
8. All whole effluent toxicity tests, effluent screening tests, and rapid screening tests that involve hypothesis testing must comply with the acute statistical power standard of 29% as defined in WAC 173-205-020. If the test does not meet the power standard, the Permittee must repeat the test on a fresh sample with an increased number of replicates to increase the power.

S11. Chronic toxicity

S11.A. Testing when there is no permit limit for chronic toxicity

The Permittee must:

1. Conduct chronic toxicity testing on final effluent during the following two quarters:
   a. January - March 2022.
   b. July - September 2022.

2. Conduct chronic toxicity testing on a series of at least five concentrations of effluent and a control. This series of dilutions must include the acute critical effluent concentration (ACEC). The ACEC equals 12.5% effluent. The series of dilutions should also contain the CCEC of 6.0% effluent.
3. Compare the ACEC to the control using hypothesis testing at the 0.05 level of significance as described in Appendix H, EPA/600/4-89/001.
4. Submit the results electronically to Ecology using the Water Quality Permitting Portal – Permit Submittals application by April 15, 2022, and October 15, 2022.
5. Perform chronic toxicity tests with all of the following species and the most recent version of the following protocols:

Freshwater Chronic Test	Species	Method
Fathead minnow survival and growth	*Pimephales promelas*	EPA-821-R-02-013
Water flea survival and reproduction	*Ceriodaphnia dubia*	EPA-821-R-02-013

S11.B. Sampling and reporting requirements

1. The Permittee must submit all reports for toxicity testing in accordance with the most recent version of Ecology Publication No. WQ-R-95-80, *Laboratory Guidance and Whole Effluent Toxicity Test Review Criteria*. Reports must contain toxicity data, bench sheets, and reference toxicant results for test methods. In addition, the Permittee must submit toxicity test data in electronic format (CETIS export file preferred) for entry into Ecology's database.
2. The Permittee must collect 24-hour composite effluent samples for toxicity testing. The Permittee must cool the samples to 0 - 6 degrees Celsius during collection and send them to the lab immediately upon completion. The lab must begin the toxicity testing as soon as possible but no later than 36 hours after sampling was completed.
3. The laboratory must conduct water quality measurements on all samples and test solutions for toxicity testing, as specified in the most recent version of Ecology Publication No. WQ-R-95-80, *Laboratory Guidance and Whole Effluent Toxicity Test Review Criteria*.
4. All toxicity tests must meet quality assurance criteria and test conditions specified in the most recent versions of the EPA methods listed in Section C and the Ecology Publication no. WQ-R-95-80, *Laboratory Guidance and Whole Effluent Toxicity Test Review Criteria*. If Ecology determines any test results to be invalid or anomalous, the Permittee must repeat the testing with freshly collected effluent.
5. The laboratory must use control water and dilution water meeting the requirements of the EPA methods listed in Subsection C or pristine natural water of sufficient quality for good control performance.
6. The Permittee must conduct whole effluent toxicity tests on an unmodified sample of final effluent.

7. The Permittee may choose to conduct a full dilution series test during compliance testing in order to determine dose response. In this case, the series must have a minimum of five effluent concentrations and a control. The series of concentrations must include the CCEC and the ACEC. The CCEC and the ACEC may either substitute for the effluent concentrations that are closest to them in the dilution series or be extra effluent concentrations. The CCEC equals 6.0% effluent. The ACEC equals 12.5% effluent.
8. All whole effluent toxicity tests that involve hypothesis testing must comply with the chronic statistical power standard of 39% as defined in WAC 173-205-020. If the test does not meet the power standard, the Permittee must repeat the test on a fresh sample with an increased number of replicates to increase the power.

S12. Compliance schedule

By the dates tabulated below, the Permittee must complete the following tasks:

	Tasks	Date Due
1	Submit an Engineering Report according to the requirements of WAC 173-240-060 for facility improvements, including those necessary to meet the final effluent limits for pH.	**December 31, 2019**
2	Submit Plans and Specifications according to the requirements of WAC 173-240-070 for any facility improvements needed to meet final effluent limits for pH.	**December 31, 2020**
3	Complete construction and installation of facilities and equipment necessary to maintain compliance with final effluent limits for pH. Submit a Declaration of Construction of Water Pollution Control Facilities (WAC 173-240-090).	**December 31, 2022**

For engineering documents, the Permittee must submit an electronic copy and one half-size paper copy to Ecology at the address listed in Special Condition S3.B.

S13. Application for permit renewal or modification for facility changes

The Permittee must submit an application for renewal of this permit by **December 31, 2022.**

The Permittee must also submit a new application or addendum at least one hundred eighty (180) days prior to commencement of discharges, resulting from the activities listed below, which may result in permit violations. These activities include any facility expansions, production increases, or other planned changes, such as process modifications, in the permitted facility.

General Conditions

G1. Signatory requirements

1. All applications submitted to Ecology must be signed and certified.

   a. In the case of corporations, by a responsible corporate officer. For the purpose of this section, a responsible corporate officer means:

      - A president, secretary, treasurer, or vice-president of the corporation in charge of a principal business function, or any other person who performs similar policy or decision making functions for the corporation, or
      - The manager of one or more manufacturing, production, or operating facilities, provided, the manager is authorized to make management decisions which govern the operation of the regulated facility including having the explicit or implicit duty of making major capital investment recommendations, and initiating and directing other comprehensive measures to assure long-term environmental compliance with environmental laws and regulations; the manager can ensure that the necessary systems are established or actions taken to gather complete and accurate information for permit application requirements; and where authority to sign documents has been assigned or delegated to the manager in accordance with corporate procedures.

   b. In the case of a partnership, by a general partner.

   c. In the case of sole proprietorship, by the proprietor.

   d. In the case of a municipal, state, or other public facility, by either a principal executive officer or ranking elected official.

   Applications for permits for domestic wastewater facilities that are either owned or operated by, or under contract to, a public entity shall be submitted by the public entity.

2. All reports required by this permit and other information requested by Ecology must be signed by a person described above or by a duly authorized representative of that person. A person is a duly authorized representative only if:

   a. The authorization is made in writing by a person described above and submitted to Ecology.

   b. The authorization specifies either an individual or a position having responsibility for the overall operation of the regulated facility, such as the position of plant manager, superintendent, position of equivalent responsibility, or an individual or position having overall responsibility for environmental matters. (A duly authorized representative may thus be either a named individual or any individual occupying a named position.)

3. Changes to authorization. If an authorization under paragraph G1.2, above, is no longer accurate because a different individual or position has responsibility for the overall operation of the facility, a new authorization satisfying the requirements of paragraph G1.2, above, must be submitted to Ecology prior to or together with any reports, information, or applications to be signed by an authorized representative.
4. Certification. Any person signing a document under this section must make the following certification:

   "I certify under penalty of law, that this document and all attachments were prepared under my direction or supervision in accordance with a system designed to assure that qualified personnel properly gathered and evaluated the information submitted. Based on my inquiry of the person or persons who manage the system or those persons directly responsible for gathering information, the information submitted is, to the best of my knowledge and belief, true, accurate, and complete. I am aware that there are significant penalties for submitting false information, including the possibility of fine and imprisonment for knowing violations."

G2. Right of inspection and entry

The Permittee must allow an authorized representative of Ecology, upon the presentation of credentials and such other documents as may be required by law:

1. To enter upon the premises where a discharge is located or where any records must be kept under the terms and conditions of this permit.
2. To have access to and copy, at reasonable times and at reasonable cost, any records required to be kept under the terms and conditions of this permit.
3. To inspect, at reasonable times, any facilities, equipment (including monitoring and control equipment), practices, methods, or operations regulated or required under this permit.
4. To sample or monitor, at reasonable times, any substances or parameters at any location for purposes of assuring permit compliance or as otherwise authorized by the Clean Water Act.

G3. Permit actions

This permit may be modified, revoked and reissued, or terminated either at the request of any interested person (including the Permittee) or upon Ecology's initiative. However, the permit may only be modified, revoked and reissued, or terminated for the reasons specified in 40 CFR 122.62, 40 CFR 122.64 or WAC 173-220-150 according to the procedures of 40 CFR 124.5.

1. The following are causes for terminating this permit during its term, or for denying a permit renewal application:
   a. Violation of any permit term or condition.
   b. Obtaining a permit by misrepresentation or failure to disclose all relevant facts.
   c. A material change in quantity or type of waste disposal.

d. A determination that the permitted activity endangers human health or the environment, or contributes to water quality standards violations and can only be regulated to acceptable levels by permit modification or termination.

e. A change in any condition that requires either a temporary or permanent reduction, or elimination of any discharge or sludge use or disposal practice controlled by the permit.

f. Nonpayment of fees assessed pursuant to RCW 90.48.465.

g. Failure or refusal of the Permittee to allow entry as required in RCW 90.48.090.

2. The following are causes for modification but not revocation and reissuance except when the Permittee requests or agrees:

a. A material change in the condition of the waters of the state.

b. New information not available at the time of permit issuance that would have justified the application of different permit conditions.

c. Material and substantial alterations or additions to the permitted facility or activities which occurred after this permit issuance.

d. Promulgation of new or amended standards or regulations having a direct bearing upon permit conditions, or requiring permit revision.

e. The Permittee has requested a modification based on other rationale meeting the criteria of 40 CFR Part 122.62.

f. Ecology has determined that good cause exists for modification of a compliance schedule, and the modification will not violate statutory deadlines.

g. Incorporation of an approved local pretreatment program into a municipality's permit.

3. The following are causes for modification or alternatively revocation and reissuance:

a. When cause exists for termination for reasons listed in 1.a through 1.g of this section, and Ecology determines that modification or revocation and reissuance is appropriate.

b. When Ecology has received notification of a proposed transfer of the permit. A permit may also be modified to reflect a transfer after the effective date of an automatic transfer (General Condition G7) but will not be revoked and reissued after the effective date of the transfer except upon the request of the new Permittee.

G4. Reporting planned changes

The Permittee must, as soon as possible, but no later than one hundred eighty (180) days prior to the proposed changes, give notice to Ecology of planned physical alterations or additions to the permitted facility, production increases, or process modification which will result in:

1. The permitted facility being determined to be a new source pursuant to 40 CFR 122.29(b).
2. A significant change in the nature or an increase in quantity of pollutants discharged.
3. A significant change in the Permittee's sludge use or disposal practices. Following such notice, and the submittal of a new application or supplement to the existing application, along with required engineering plans and reports, this permit may be modified, or revoked and reissued pursuant to 40 CFR 122.62(a) to specify and limit any pollutants not previously limited. Until such modification is effective, any new or increased discharge in excess of permit limits or not specifically authorized by this permit constitutes a violation.

G5. Plan review required

Prior to constructing or modifying any wastewater control facilities, an engineering report and detailed plans and specifications must be submitted to Ecology for approval in accordance with chapter 173-240 WAC. Engineering reports, plans, and specifications must be submitted at least one hundred eighty (180) days prior to the planned start of construction unless a shorter time is approved by Ecology. Facilities must be constructed and operated in accordance with the approved plans.

G6. Compliance with other laws and statutes

Nothing in this permit excuses the Permittee from compliance with any applicable federal, state, or local statutes, ordinances, or regulations.

G7. Transfer of this permit

In the event of any change in control or ownership of facilities from which the authorized discharge emanate, the Permittee must notify the succeeding owner or controller of the existence of this permit by letter, a copy of which must be forwarded to Ecology.

1. Transfers by Modification

   Except as provided in paragraph (2) below, this permit may be transferred by the Permittee to a new owner or operator only if this permit has been modified or revoked and reissued under 40 CFR 122.62(b)(2), or a minor modification made under 40 CFR 122.63(d), to identify the new Permittee and incorporate such other requirements as may be necessary under the Clean Water Act.

2. Automatic Transfers

   This permit may be automatically transferred to a new Permittee if:

   a. The Permittee notifies Ecology at least thirty (30) days in advance of the proposed transfer date.

   b. The notice includes a written agreement between the existing and new Permittees containing a specific date transfer of permit responsibility, coverage, and liability between them.

c. Ecology does not notify the existing Permittee and the proposed new Permittee of its intent to modify or revoke and reissue this permit. A modification under this subparagraph may also be minor modification under 40 CFR 122.63. If this notice is not received, the transfer is effective on the date specified in the written agreement.

G8. Reduced production for compliance

The Permittee, in order to maintain compliance with its permit, must control production and/or all discharges upon reduction, loss, failure, or bypass of the treatment facility until the facility is restored or an alternative method of treatment is provided. This requirement applies in the situation where, among other things, the primary source of power of the treatment facility is reduced, lost, or fails.

G9. Removed substances

Collected screenings, grit, solids, sludges, filter backwash, or other pollutants removed in the course of treatment or control of wastewaters must not be resuspended or reintroduced to the final effluent stream for discharge to state waters.

G10. Duty to provide information

The Permittee must submit to Ecology, within a reasonable time, all information which Ecology may request to determine whether cause exists for modifying, revoking and reissuing, or terminating this permit or to determine compliance with this permit. The Permittee must also submit to Ecology upon request, copies of records required to be kept by this permit.

G11. Other requirements of 40 CFR

All other requirements of 40 CFR 122.41 and 122.42 are incorporated in this permit by reference.

G12. Additional monitoring

Ecology may establish specific monitoring requirements in addition to those contained in this permit by administrative order or permit modification.

G13. Payment of fees

The Permittee must submit payment of fees associated with this permit as assessed by Ecology.

G14. Penalties for violating permit conditions

Any person who is found guilty of willfully violating the terms and conditions of this permit is deemed guilty of a crime, and upon conviction thereof shall be punished by a fine of up to ten thousand dollars ($10,000) and costs of prosecution, or by imprisonment in the discretion of the court. Each day upon which a willful violation occurs may be deemed a separate and additional violation.

Any person who violates the terms and conditions of a waste discharge permit may incur, in addition to any other penalty as provided by law, a civil penalty in the amount of up to ten thousand dollars ($10,000) for every such violation. Each and every such violation is a separate and distinct offense, and in case of a continuing violation, every day's continuance is deemed to be a separate and distinct violation.

G15. Upset

Definition – "Upset" means an exceptional incident in which there is unintentional and temporary noncompliance with technology-based permit effluent limits because of factors beyond the reasonable control of the Permittee. An upset does not include noncompliance to the extent caused by operational error, improperly designed treatment facilities, inadequate treatment facilities, lack of preventive maintenance, or careless or improper operation.

An upset constitutes an affirmative defense to an action brought for noncompliance with such technology-based permit effluent limits if the requirements of the following paragraph are met.

A Permittee who wishes to establish the affirmative defense of upset must demonstrate, through properly signed, contemporaneous operating logs, or other relevant evidence that:

1. An upset occurred and that the Permittee can identify the cause(s) of the upset.
2. The permitted facility was being properly operated at the time of the upset.
3. The Permittee submitted notice of the upset as required in Special Condition S3.F.
4. The Permittee complied with any remedial measures required under S3.F of this permit.

In any enforcement action the Permittee seeking to establish the occurrence of an upset has the burden of proof.

G16. Property rights

This permit does not convey any property rights of any sort, or any exclusive privilege.

G17. Duty to comply

The Permittee must comply with all conditions of this permit. Any permit noncompliance constitutes a violation of the Clean Water Act and is grounds for enforcement action; for permit termination, revocation and reissuance, or modification; or denial of a permit renewal application.

G18. Toxic pollutants

The Permittee must comply with effluent standards or prohibitions established under Section 307(a) of the Clean Water Act for toxic pollutants within the time provided in the regulations that establish those standards or prohibitions, even if this permit has not yet been modified to incorporate the requirement.

G19. Penalties for tampering

The Clean Water Act provides that any person who falsifies, tampers with, or knowingly renders inaccurate any monitoring device or method required to be maintained under this permit shall, upon conviction, be punished by a fine of not more than $10,000 per violation, or by imprisonment for not more than two (2) years per violation, or by both. If a conviction of a person is for a violation committed after a first conviction of such person under this condition, punishment shall be a fine of not more than $20,000 per day of violation, or by imprisonment of not more than four (4) years, or by both.

G20. Compliance schedules

Reports of compliance or noncompliance with, or any progress reports on, interim and final requirements contained in any compliance schedule of this permit must be submitted no later than fourteen (14) days following each schedule date.

G21. Service agreement review

The Permittee must submit to Ecology any proposed service agreements and proposed revisions or updates to existing agreements for the operation of any wastewater treatment facility covered by this permit. The review is to ensure consistency with chapters 90.46 and 90.48 RCW as required by RCW 70.150.040(9). In the event that Ecology does not comment within a thirty-day (30) period, the Permittee may assume consistency and proceed with the service agreement or the revised/updated service agreement.

Appendix A

LIST OF POLLUTANTS WITH ANALYTICAL METHODS, DETECTION LIMITS AND QUANTITATION LEVELS

The Permittee must use the specified analytical methods, detection limits (DLs) and quantitation levels (QLs) in the following table for permit and application required monitoring unless:

- Another permit condition specifies other methods, detection levels, or quantitation levels.
- The method used produces measurable results in the sample and EPA has listed it as an EPA-approved method in 40 CFR Part 136.

If the Permittee uses an alternative method, not specified in the permit and as allowed above, it must report the test method, DL, and QL on the discharge monitoring report or in the required report.

If the Permittee is unable to obtain the required DL and QL in its effluent due to matrix effects, the Permittee must submit a matrix-specific detection limit (MDL) and a quantitation limit (QL) to Ecology with appropriate laboratory documentation.

When the permit requires the Permittee to measure the base neutral compounds in the list of priority pollutants, it must measure all of the base neutral pollutants listed in the table below. The list includes EPA required base neutral priority pollutants and several additional polynuclear aromatic hydrocarbons (PAHs). The Water Quality Program added several PAHs to the list of base neutrals below from Ecology's Persistent Bioaccumulative Toxics (PBT) List. It only added those PBT parameters of interest to Appendix A that did not increase the overall cost of analysis unreasonably.

Ecology added this appendix to the permit in order to reduce the number of analytical "non-detects" in permit-required monitoring and to measure effluent concentrations near or below criteria values where possible at a reasonable cost.

The lists below include conventional pollutants (as defined in CWA section 502(6) and 40 CFR Part 122.), toxic or priority pollutants as defined in CWA section 307(a)(1) and listed in 40 CFR Part 122 Appendix D, 40 CFR Part 401.15 and 40 CFR Part 423 Appendix A), and nonconventionals. 40 CFR Part 122 Appendix D (Table V) also identifies toxic pollutants and hazardous substances which are required to be reported by dischargers if expected to be present. This permit Appendix A list does not include those parameters.

CONVENTIONAL POLLUTANTS

Pollutant	CAS Number (if available)	Recommended Analytical Protocol	Detection (DL)[1] *µg/L unless specified*	Quantitation Level (QL)[2] *µg/L unless specified*
Biochemical Oxygen Demand		SM5210-B		2 mg/L
Biochemical Oxygen Demand, Soluble		SM5210-B [3]		2 mg/L
Fecal Coliform		SM 9221E,9222	N/A	Specified in method - sample aliquot dependent
Oil and Grease (HEM) (Hexane Extractable Material)		1664 A or B	1,400	5,000
pH		SM4500-H^+ B	N/A	N/A
Total Suspended Solids		SM2540-D		5 mg/L

NONCONVENTIONAL POLLUTANTS

Pollutant & CAS No. (if available)	CAS Number (if available)	Recommended Analytical Protocol	Detection (DL)[1] µg/L unless specified	Quantitation Level (QL)[2] µg/L unless specified
Alkalinity, Total		SM2320-B		5 mg/L as CaCO3
Aluminum, Total	7429-90-5	200.8	2.0	10
Ammonia, Total (as N)		SM4500-NH3-B and C/D/E/G/H		20
Barium Total	7440-39-3	200.8	0.5	2.0
BTEX (benzene +toluene + ethylbenzene + m,o,p xylenes)		EPA SW 846 8021/8260	1	2
Boron, Total	7440-42-8	200.8	2.0	10.0
Chemical Oxygen Demand		SM5220-D		10 mg/L
Chloride		SM4500-Cl B/C/D/E and SM4110 B		Sample and limit dependent
Chlorine, Total Residual		SM4500 Cl G		50.0

NONCONVENTIONAL POLLUTANTS

Pollutant & CAS No. (if available)	CAS Number (if available)	Recommended Analytical Protocol	Detection (DL)[1] µg/L unless specified	Quantitation Level (QL)[2] µg/L unless specified
Cobalt, Total	7440-48-4	200.8	0.05	0.25
Color		SM2120 B/C/E		10 color units
Dissolved oxygen		SM4500-OC/OG		0.2 mg/L
Flow		Calibrated device		
Fluoride	16984-48-8	SM4500-F E	25	100
Hardness, Total		SM2340B		200 as CaCO3
Iron, Total	7439-89-6	200.7	12.5	50
Magnesium, Total	7439-95-4	200.7	10	50
Manganese, Total	7439-96-5	200.8	0.1	0.5
Molybdenum, Total	7439-98-7	200.8	0.1	0.5
Nitrate + Nitrite Nitrogen (as N)		SM4500-NO3- E/F/H		100
Nitrogen, Total Kjeldahl (as N)		SM4500-N_{org}B/C and SM4500NH_3-B/C/D/EF/G/H		300
NWTPH Dx [4]		Ecology NWTPH Dx	250	250
NWTPH Gx [5]		Ecology NWTPH Gx	250	250
Phosphorus, Total (as P)		SM 4500 PB followed by SM4500-PE/PF	3	10
Salinity		SM2520-B		3 practical salinity units or scale (PSU or PSS)
Settleable Solids		SM2540 -F		Sample and limit dependent
Soluble Reactive Phosphorus (as P)		SM4500-P E/F/G	3	10
Sulfate (as mg/L SO_4)		SM4110-B		0.2 mg/L
Sulfide (as mg/L S)		SM4500-S^2F/D/E/G		0.2 mg/L

NONCONVENTIONAL POLLUTANTS

Pollutant & CAS No. (if available)	CAS Number (if available)	Recommended Analytical Protocol	Detection (DL)[1] µg/L unless specified	Quantitation Level (QL)[2] µg/L unless specified
Sulfite (as mg/L SO_3)		SM4500-SO3B		2 mg/L
Temperature (max. 7-day avg.)		Analog recorder or use micro-recording devices known as thermistors		0.2º C
Tin, Total	7440-31-5	200.8	0.3	1.5
Titanium, Total	7440-32-6	200.8	0.5	2.5
Total Coliform		SM 9221B, 9222B, 9223B	N/A	Specified in method - sample aliquot dependent
Total Organic Carbon		SM5310-B/C/D		1 mg/L
Total dissolved solids		SM2540 C		20 mg/L

PRIORITY POLLUTANTS	PP #	CAS Number (if available)	Recommended Analytical Protocol	Detection (DL)[1] ***µg/L unless specified***	Quantitation Level (QL) [2] ***µg/L unless specified***
METALS, CYANIDE & TOTAL PHENOLS					
Antimony, Total	114	7440-36-0	200.8	0.3	1.0
Arsenic, Total	115	7440-38-2	200.8	0.1	0.5
Beryllium, Total	117	7440-41-7	200.8	0.1	0.5
Cadmium, Total	118	7440-43-9	200.8	0.05	0.25
Chromium (hex) dissolved	119	18540-29-9	SM3500-Cr C	0.3	1.2
Chromium, Total	119	7440-47-3	200.8	0.2	1.0
Copper, Total	120	7440-50-8	200.8	0.4	2.0
Lead, Total	122	7439-92-1	200.8	0.1	0.5
Mercury, Total	123	7439-97-6	1631E	0.0002	0.0005
Nickel, Total	124	7440-02-0	200.8	0.1	0.5

PRIORITY POLLUTANTS	**PP #**	**CAS Number (if available)**	**Recommended Analytical Protocol**	**Detection (DL)[1] *µg/L unless specified***	**Quantitation Level (QL) [2] *µg/L unless specified***
METALS, CYANIDE & TOTAL PHENOLS					
Selenium, Total	125	7782-49-2	200.8	1.0	1.0
Silver, Total	126	7440-22-4	200.8	0.04	0.2
Thallium, Total	127	7440-28-0	200.8	0.09	0.36
Zinc, Total	128	7440-66-6	200.8	0.5	2.5
Cyanide, Total	121	57-12-5	335.4	5	10
Cyanide, Weak Acid Dissociable	121		SM4500-CN I	5	10
Cyanide, Free Amenable to Chlorination (Available Cyanide)	121		SM4500-CN G	5	10
Phenols, Total	65		EPA 420.1		50

PRIORITY POLLUTANTS	**PP #**	**CAS Number (if available)**	**Recommended Analytical Protocol**	**Detection (DL)[1] *µg/L unless specified***	**Quantitation Level (QL) [2] *µg/L unless specified***
ACID COMPOUNDS					
2-Chlorophenol	24	95-57-8	625.1	3.3	9.9
2,4-Dichlorophenol	31	120-83-2	625.1	2.7	8.1
2,4-Dimethylphenol	34	105-67-9	625.1	2.7	8.1
4,6-dinitro-o-cresol (2-methyl-4,6,-dinitrophenol)	60	534-52-1	625.1/1625B	24	72
2,4 dinitrophenol	59	51-28-5	625.1	42	126
2-Nitrophenol	57	88-75-5	625.1	3.6	10.8
4-Nitrophenol	58	100-02-7	625.1	2.4	7.2
Parachlorometa cresol (4-chloro-3-methylphenol)	22	59-50-7	625.1	3.0	9.0
Pentachlorophenol	64	87-86-5	625.1	3.6	10.8
Phenol	65	108-95-2	625.1	1.5	4.5
2,4,6-Trichlorophenol	21	88-06-2	625.1	2.7	8.1

PRIORITY POLLUTANTS	**PP #**	**CAS Number (if available)**	**Recommended Analytical Protocol**	**Detection (DL)[1] *µg/L unless specified***	**Quantitation Level (QL) [2] *µg/L unless specified***
VOLATILE COMPOUNDS					
Acrolein	2	107-02-8	624	5	10
Acrylonitrile	3	107-13-1	624	1.0	2.0
Benzene	4	71-43-2	624.1	4.4	13.2
Bromoform	47	75-25-2	624.1	4.7	14.1
Carbon tetrachloride	6	56-23-5	624.1/601 or SM6230B	2.8	8.4
Chlorobenzene	7	108-90-7	624.1	6.0	18.0
Chloroethane	16	75-00-3	624/601	1.0	2.0
2-Chloroethylvinyl Ether	19	110-75-8	624	1.0	2.0
Chloroform	23	67-66-3	624.1 or SM6210B	1.6	4.8
Dibromochloromethane (chlordibromomethane)	51	124-48-1	624.1	3.1	9.3
1,2-Dichlorobenzene	25	95-50-1	624	1.9	7.6
1,3-Dichlorobenzene	26	541-73-1	624	1.9	7.6
1,4-Dichlorobenzene	27	106-46-7	624	4.4	17.6
Dichlorobromomethane	48	75-27-4	624.1	2.2	6.6
1,1-Dichloroethane	13	75-34-3	624.1	4.7	14.1
1,2-Dichloroethane	10	107-06-2	624.1	2.8	8.4
1,1-Dichloroethylene	29	75-35-4	624.1	2.8	8.4
1,2-Dichloropropane	32	78-87-5	624.1	6.0	18.0
1,3-dichloropropene (mixed isomers) (1,2-dichloropropylene) [6]	33	542-75-6	624.1	5.0	15.0
Ethylbenzene	38	100-41-4	624.1	7.2	21.6
Methyl bromide (Bromomethane)	46	74-83-9	624/601	5.0	10.0

PRIORITY POLLUTANTS	PP #	CAS Number (if available)	Recommended Analytical Protocol	Detection (DL)[1] *µg/L unless specified*	Quantitation Level (QL) [2] *µg/L unless specified*
VOLATILE COMPOUNDS					
Methyl chloride (Chloromethane)	45	74-87-3	624	1.0	2.0
Methylene chloride	44	75-09-2	624.1	2.8	8.4
1,1,2,2-Tetrachloroethane	15	79-34-5	624.1	6.9	20.7
Tetrachloroethylene	85	127-18-4	624.1	4.1	12.3
Toluene	86	108-88-3	624.1	6.0	18.0
1,2-Trans-Dichloroethylene (Ethylene dichloride)	30	156-60-5	624.1	1.6	4.8
1,1,1-Trichloroethane	11	71-55-6	624.1	3.8	11.4
1,1,2-Trichloroethane	14	79-00-5	624.1	5.0	15.0
Trichloroethylene	87	79-01-6	624.1	1.9	5.7
Vinyl chloride	88	75-01-4	624/SM6200B	1.0	2.0

PRIORITY POLLUTANTS	PP #	CAS Number (if available)	Recommended Analytical Protocol	Detection (DL)[1] *µg/L unless specified*	Quantitation Level (QL) [2] *µg/L unless specified*
BASE/NEUTRAL COMPOUNDS (compounds in bold are Ecology PBTs)					
Acenaphthene	1	83-32-9	625.1	1.9	5.7
Acenaphthylene	77	208-96-8	625.1	3.5	10.5
Anthracene	78	120-12-7	625.1	1.9	5.7
Benzidine	5	92-87-5	625.1	44	132
Benzyl butyl phthalate	67	85-68-7	625.1	2.5	7.5
Benzo(*a*)anthracene	72	56-55-3	625.1	7.8	23.4
Benzo(b)fluoranthene (3,4-benzofluoranthene) [7]	74	205-99-2	610/625.1	4.8	14.4
Benzo(j)fluoranthene [7]		**205-82-3**	625	0.5	1.0

PRIORITY POLLUTANTS	**PP #**	**CAS Number (if available)**	**Recommended Analytical Protocol**	**Detection (DL)[1] *µg/L unless specified***	**Quantitation Level (QL) [2] *µg/L unless specified***
BASE/NEUTRAL COMPOUNDS (compounds in bold are Ecology PBTs)					
Benzo(k)fluoranthene (11,12-benzofluoranthene) [7]	75	207-08-9	610/625.1	2.5	7.5
Benzo(r,s,t)pentaphene		**189-55-9**	625	1.3	5.0
Benzo(*a*)pyrene	73	50-32-8	610/625.1	2.5	7.5
Benzo(*ghi*)Perylene	79	191-24-2	610/625.1	4.1	12.3
Bis(*2-chloroethoxy)*methane	43	111-91-1	625.1	5.3	15.9
Bis(*2-chloroethyl*)ether	18	111-44-4	611/625.1	5.7	17.1
Bis(*2-chloroisopropyl*)ether	42	39638-32-9	625	0.5	1.0
Bis(*2-ethylhexyl*)phthalate	66	117-81-7	625.1	2.5	7.5
4-Bromophenyl phenyl ether	41	101-55-3	625.1	1.9	5.7
2-Chloronaphthalene	20	91-58-7	625.1	1.9	5.7
4-Chlorophenyl phenyl ether	40	7005-72-3	625.1	4.2	12.6
Chrysene	76	218-01-9	610/625.1	2.5	7.5
Dibenzo (a,h)acridine		**226-36-8**	610M/625M	2.5	10.0
Dibenzo (a,j)acridine		**224-42-0**	610M/625M	2.5	10.0
Dibenzo(a-*h*)anthracene (1,2,5,6-dibenzanthracene)	82	53-70-3	625.1	2.5	7.5
Dibenzo(a,e)pyrene		192-65-4	610M/625M	2.5	10.0
Dibenzo(a,h)pyrene		189-64-0	625M	2.5	10.0
3,3-Dichlorobenzidine	28	91-94-1	605/625.1	16.5	49.5
Diethyl phthalate	70	84-66-2	625.1	1.9	5.7
Dimethyl phthalate	71	131-11-3	625.1	1.6	4.8
Di-n-butyl phthalate	68	84-74-2	625.1	2.5	7.5
2,4-dinitrotoluene	35	121-14-2	609/625.1	5.7	17.1

PRIORITY POLLUTANTS	**PP #**	**CAS Number (if available)**	**Recommended Analytical Protocol**	**Detection (DL)[1] *µg/L unless specified***	**Quantitation Level (QL) [2] *µg/L unless specified***
BASE/NEUTRAL COMPOUNDS (compounds in bold are Ecology PBTs)					
2,6-dinitrotoluene	36	606-20-2	609/625.1	1.9	5.7
Di-n-octyl phthalate	69	117-84-0	625.1	2.5	7.5
1,2-Diphenylhydrazine (*as Azobenzene*)	37	122-66-7	1625B	5.0	20
Fluoranthene	39	206-44-0	625.1	2.2	6.6
Fluorene	80	86-73-7	625.1	1.9	5.7
Hexachlorobenzene	9	118-74-1	612/625.1	1.9	5.7
Hexachlorobutadiene	52	87-68-3	625.1	0.9	2.7
Hexachlorocyclopentadiene	53	77-47-4	1625B/625	2.0	4.0
Hexachloroethane	12	67-72-1	625.1	1.6	4.8
Indeno(*1,2,3-cd*)Pyrene	83	193-39-5	610/625.1	3.7	11.1
Isophorone	54	78-59-1	625.1	2.2	6.6
3-Methyl cholanthrene		**56-49-5**	625	2.0	8.0
Naphthalene	55	91-20-3	625.1	1.6	4.8
Nitrobenzene	56	98-95-3	625.1	1.9	5.7
N-Nitrosodimethylamine	61	62-75-9	607/625	2.0	4.0
N-Nitrosodi-n-propylamine	63	621-64-7	607/625	0.5	1.0
N-Nitrosodiphenylamine	62	86-30-6	625	1.0	2.0
Perylene		**198-55-0**	625	1.9	7.6
Phenanthrene	81	85-01-8	625.1	5.4	16.2
Pyrene	84	129-00-0	625.1	1.9	5.7
1,2,4-Trichlorobenzene	8	120-82-1	625.1	1.9	5.7

PRIORITY POLLUTANT	PP #	CAS Number (if available)	Recommended Analytical Protocol	Detection (DL)[1] *µg/L unless specified*	Quantitation Level (QL) [2] *µg/L unless specified*
DIOXIN					
2,3,7,8-Tetra-Chlorodibenzo-P-Dioxin (2,3,7,8 TCDD)	129	1746-01-6	1613B	1.3 pg/L	5 pg/L

PRIORITY POLLUTANTS	PP #	CAS Number (if available)	Recommended Analytical Protocol	Detection (DL)[1] *µg/L unless specified*	Quantitation Level (QL) [2] *µg/L unless specified*
PESTICIDES/PCBs					
Aldrin	89	309-00-2	608.3	4.0 ng/L	12 ng/L
alpha-BHC	102	319-84-6	608.3	3.0 ng/L	9.0 ng/L
beta-BHC	103	319-85-7	608.3	6.0 ng/L	18 ng/L
gamma-BHC (Lindane)	104	58-89-9	608.3	4.0 ng/L	12 ng/L
delta-BHC	105	319-86-8	608.3	9.0 ng/L	27 ng/L
Chlordane [8]	91	57-74-9	608.3	14 ng/L	42 ng/L
4,4'-DDT	92	50-29-3	608.3	12 ng/L	36 ng/L
4,4'-DDE	93	72-55-9	608.3	4.0 ng/L	12 ng/L
4,4' DDD	94	72-54-8	608.3	11ng/L	33 ng/L
Dieldrin	90	60-57-1	608.3	2.0 ng/L	6.0 ng/L
alpha-Endosulfan	95	959-98-8	608.3	14 ng/L	42 ng/L
beta-Endosulfan	96	33213-65-9	608.3	4.0 ng/L	12 ng/L
Endosulfan Sulfate	97	1031-07-8	608.3	66 ng/L	198 ng/L
Endrin	98	72-20-8	608.3	6.0 ng/L	18 ng/L
Endrin Aldehyde	99	7421-93-4	608.3	23 ng/L	70 ng/L
Heptachlor	100	76-44-8	608.3	3.0 ng/L	9.0 ng/L
Heptachlor Epoxide	101	1024-57-3	608.3	83 ng/L	249 ng/L
PCB-1242 [9]	106	53469-21-9	608.3	0.065	0.195

PRIORITY POLLUTANTS	**PP #**	**CAS Number (if available)**	**Recommended Analytical Protocol**	**Detection (DL)[1] *µg/L unless specified***	**Quantitation Level (QL) [2] *µg/L unless specified***
PESTICIDES/PCBs					
PCB-1254	107	11097-69-1	608.3	0.065	0.195
PCB-1221	108	11104-28-2	608.3	0.065	0.195
PCB-1232	109	11141-16-5	608.3	0.065	0.195
PCB-1248	110	12672-29-6	608.3	0.065	0.195
PCB-1260	111	11096-82-5	608.3	0.065	0.195
PCB-1016 [9]	112	12674-11-2	608.3	0.065	0.195
Toxaphene	113	8001-35-2	608.3	240 ng/L	720 ng/L

1. Detection level (DL) or detection limit means the minimum concentration of an analyte (substance) that can be measured and reported with a 99% confidence that the analyte concentration is greater than zero as determined by the procedure given in 40 CFR part 136, Appendix B.
2. Quantitation Level (QL) also known as Minimum Level of Quantitation (ML) – The lowest level at which the entire analytical system must give a recognizable signal and acceptable calibration point for the analyte. It is equivalent to the concentration of the lowest calibration standard, assuming that the lab has used all method-specified sample weights, volumes, and cleanup procedures. The QL is calculated by multiplying the MDL by 3.18 and rounding the result to the number nearest to (1, 2, or 5) x 10^n, where n is an integer (64 FR 30417).
   ALSO GIVEN AS:
   The smallest detectable concentration of analyte greater than the Detection Limit (DL) where the accuracy (precision & bias) achieves the objectives of the intended purpose. (Report of the Federal Advisory Committee on Detection and Quantitation Approaches and Uses in Clean Water Act Programs Submitted to the US Environmental Protection Agency, December 2007).
3. Soluble Biochemical Oxygen Demand method note: First, filter the sample through a Millipore Nylon filter (or equivalent) - pore size of 0.45-0.50 um (prep all filters by filtering 250 ml of laboratory grade deionized water through the filter and discard). Then, analyze sample as per method 5210-B.
4. NWTPH Dx - Northwest Total Petroleum Hydrocarbons Diesel Extended Range – see https://fortress.wa.gov/ecy/publications/documents/97602.pdf
5. NWTPH Gx - Northwest Total Petroleum Hydrocarbons Gasoline Extended Range – see https://fortress.wa.gov/ecy/publications/documents/97602.pdf
6. 1, 3-dichloroproylene (mixed isomers) You may report this parameter as two separate parameters: cis-1, 3-dichlorpropropene (10061-01-5) and trans-1, 3-dichloropropene (10061-02-6).
7. Total Benzofluoranthenes - Because Benzo(b)fluoranthene, Benzo(j)fluoranthene and Benzo(k)fluoranthene co-elute you may report these three isomers as total benzofluoranthenes.
8. Chlordane – You may report alpha-chlordane (5103-71-9) and gamma-chlordane (5103-74-2) in place of chlordane (57-74-9). If you report alpha and gamma-chlordane, the DL/PQLs that apply are 14/42 ng/L.
9. PCB 1016 & PCB 1242 – You may report these two PCB compounds as one parameter called PCB 1016/1242.

Appendix SS-B

Discharge Monitoring Reports

THIS PAGE INTENTIONALLY BLANK

Washington State Department of Ecology **Discharge Monitoring Report (DMR)**

Permit Number: WA0020486 **Permittee:** MONROE STP

Facility County: Snohomish **Receiving Waterbody:**

Monitoring Period: 01/01/2021 - 01/31/2021 **Outfall:** 001 **Version:** 1

Week	Monitoring Point	Total BOD5 Total Milligrams/L (mg/L) 3/Week Composite sample (24 hour)	BOD5 Calculated Calculated Lbs/Day 3/Week Calculated	Solids (Residue) Total suspended (TSS) Milligrams/L (mg/L) 3/Week Composite sample (24 hour)	Solids (Residue) Total suspended (TSS) Lbs/Day 3/Week Calculated	Flow Million Gallons/Day Continuous Metered/Recorded	Total BOD5 Total Milligrams/L (mg/L) 3/Week Composite sample (24 hour)	BOD5 Calculated Calculated Lbs/Day 3/Week Calculated	Total BOD5 Total Percent Monthly Calculated	Solids (Residue) Total suspended (TSS) Milligrams/L (mg/L) 3/Week Composite sample (24 hour)	Solids (Residue) Total suspended (TSS) Lbs/Day 3/Week Calculated	Solids (Residue) Total suspended (TSS) Percent Monthly Calculated
		IN1	IN1	IN1	IN1	001	001	001	001	001	001	001
1-F	**1/1/21**					2.174						
1-Sa	**1/2/21**					2.199						
2-Su	**1/3/21**					3.067						
2-M	**1/4/21**	133	3611	106	2878	2.863	6	163	95	6	163	94
2-T	**1/5/21**	137	3924	116	3322	3.255	6	172	96	5	143	96
2-W	**1/6/21**	141	3381	78	1870	3.434	3	72	98	4	96	95
2-Th	**1/7/21**					2.875						
2-F	**1/8/21**					2.360						
2-Sa	**1/9/21**					2.354						
3-Su	**1/10/21**					2.128						
3-M	**1/11/21**					2.033						
3-T	**1/12/21**	161	4520	206	5783	2.817	10	281	94	3	84	99
3-W	**1/13/21**	177	4349	144	3538	3.366	4	98	98	2	49	99
3-Th	**1/14/21**	183	3529	144	2777	2.946	4	77	98	2	39	99
3-F	**1/15/21**					2.312						
3-Sa	**1/16/21**					2.331						
4-Su	**1/17/21**					2.129						
4-M	**1/18/21**	214	3627	166	2813	2.098	6	102	97	3	51	98
4-T	**1/19/21**	236	4186	122	2164	2.032	5	89	98	6	106	95
4-W	**1/20/21**	234	3889	122	2028	2.127	3	50	99	6	100	95
4-Th	**1/21/21**					1.993						
4-F	**1/22/21**					1.910						
4-Sa	**1/23/21**					1.938						
5-Su	**1/24/21**					1.771						
5-M	**1/25/21**	199	3187	128	2050	1.901	7	112	96	7	112	95
5-T	**1/26/21**	217	3344	140	2158	1.920	6	92	97	7	108	95
5-W	**1/27/21**	209	3077	136	2002	1.848	6	88	97	5	74	96
5-Th	**1/28/21**					1.765						
5-F	**1/29/21**					1.816						
5-Sa	**1/30/21**					1.737						
6-Su	**1/31/21**					1.815						
Daily Minimum												
Average		187	3719	134	2782	2.317	6	116	97	5	94	96
		Report Only	DL: 6090	Report Only	DL: 5940	DL: 2.84	<= 30	<= 711	>= 85	<= 30	<= 711	>= 85
Weekly Average							6	152		6	134	
							<= 45	<= 1066		<= 45	<= 1066	
Maximum		236	4520	206	5783	3.434						
		Report Only	Report Only	Report Only	Report Only	Report Only						
Daily Maximum												
Monthly geometric mean												
Weekly Geometric Mean												

Week	Monitoring Point	Fecal Coliform #/100ml 3/Week Grab	pH Standard Units 1/Day Grab	Temperature Measured Degrees C Continuous Measurement	Temperature (7-DAD Max) Calculated Degrees C 1/Day Calculated
		001	001	001	001
1-F	**1/1/21**		6.9	13.2	13.4
1-Sa	**1/2/21**		7.0	13.2	13.4
2-Su	**1/3/21**		6.7	13.0	13.3
2-M	**1/4/21**	2	7.2	12.7	13.2
2-T	**1/5/21**	1	7.1	12.8	13.1
2-W	**1/6/21**	1	7.0	12.7	13.0
2-Th	**1/7/21**		7.0	13.1	13.0
2-F	**1/8/21**		6.7	13.3	13.0
2-Sa	**1/9/21**		7.0	13.3	13.0
3-Su	**1/10/21**		7.0	13.5	13.1
3-M	**1/11/21**	2	7.6	13.5	13.2
3-T	**1/12/21**	1	7.4	13.2	13.2
3-W	**1/13/21**	1	7.2	12.8	13.2
3-Th	**1/14/21**		7.2	13.3	13.3
3-F	**1/15/21**		7.3	13.5	13.3
3-Sa	**1/16/21**		7.0	13.6	13.3
4-Su	**1/17/21**		7.2	13.6	13.4
4-M	**1/18/21**		7.0	13.6	13.4
4-T	**1/19/21**	1	7.1	13.6	13.4
4-W	**1/20/21**	3	7.2	13.6	13.5
4-Th	**1/21/21**	1	7.1	13.5	13.6
4-F	**1/22/21**		7.0	13.6	13.6
4-Sa	**1/23/21**		6.9	13.5	13.6
5-Su	**1/24/21**		7.1	13.3	13.5
5-M	**1/25/21**	2	7.1	13.2	13.5
5-T	**1/26/21**	2	6.8	13.2	13.4
5-W	**1/27/21**	1	7.1	13.1	13.3
5-Th	**1/28/21**		7.2	13.4	13.3
5-F	**1/29/21**		7.1	13.4	13.3
5-Sa	**1/30/21**		7.2	13.4	13.3
6-Su	**1/31/21**		7.1	13.3	13.3
Daily Minimum			6.7		
			>= 6.0 (RO)		
Average					
Weekly Average					
Maximum					13.6
					Report Only
Daily Maximum			7.6	13.6	
			<= 9.0 (RO)	Report Only	
Monthly geometric mean		1			
		<= 100			
Weekly Geometric Mean		2			
		<= 200			

I certify under penalty of law, that this document and all attachments were prepared under my direction or supervision in accordance with a system designed to assure that qualified personnel properly gather and evaluate the information submitted. Based on my inquiry of the person or persons who manage the system or those persons directly responsible for gathering information, the information submitted is, to the best of my knowledge and belief, true, accurate, and complete. I am aware that there are significant penalties for submitting false information, including the possibility of fine and imprisonment for knowing violations.

Donovan Sheppard

Signature

2/4/2021 7:51:41 AM

Date

Washington State Department of Ecology **Discharge Monitoring Report (DMR)**

Permit Number: WA0020486 **Permittee:** MONROE STP

Facility County: Snohomish **Receiving Waterbody:**

Monitoring Period: 02/01/2021 - 02/28/2021 **Outfall:** 001 **Version:** 1

Week	Monitoring Point	Total BOD5 Total Milligrams/L (mg/L) 3/Week Composite sample (24 hour)	BOD5 Calculated Calculated Lbs/Day 3/Week Calculated	Solids (Residue) Total suspended (TSS) Milligrams/L (mg/L) 3/Week Composite sample (24 hour)	Solids (Residue) Total suspended (TSS) Lbs/Day 3/Week Calculated	Flow Million Gallons/Day Continuous Metered/Recorded	Total BOD5 Total Milligrams/L (mg/L) 3/Week Composite sample (24 hour)	BOD5 Calculated Calculated Lbs/Day 3/Week Calculated	Total BOD5 Total Percent Monthly Calculated	Solids (Residue) Total suspended (TSS) Milligrams/L (mg/L) 3/Week Composite sample (24 hour)	Solids (Residue) Total suspended (TSS) Lbs/Day 3/Week Calculated	Solids (Residue) Total suspended (TSS) Percent Monthly Calculated
		IN1	IN1	IN1	IN1	001	001	001	001	001	001	001
1-M	**2/1/21**	178	4048	154	3493	1.880	10	238	94	14	318	91
1-T	**2/2/21**	159	3169	146	2917	2.720	7	138	96	8	160	95
1-W	**2/3/21**	197	3508	128	2264	2.396	5	91	97	7	125	95
1-Th	**2/4/21**					2.140						
1-F	**2/5/21**					2.401						
1-Sa	**2/6/21**					2.667						
2-Su	**2/7/21**					2.070						
2-M	**2/8/21**					2.122						
2-T	**2/9/21**	221	3734	178	3003	2.019	5	91	98	2	34	99
2-W	**2/10/21**	237	3665	196	3029	2.023	6	91	98	2	31	99
2-Th	**2/11/21**	217	3441	174	2762	1.853	5	83	98	2	32	99
2-F	**2/12/21**					1.903						
2-Sa	**2/13/21**					1.850						
3-Su	**2/14/21**					1.771						
3-M	**2/15/21**	184	3438	158	2960	1.786	8	150	96	13	244	92
3-T	**2/16/21**	171	3766	132	2914	2.246	10	214	94	14	309	89
3-W	**2/17/21**	187	3534	144	2719	2.647	6	115	97	7	132	95
3-Th	**2/18/21**					2.264						
3-F	**2/19/21**					2.079						
3-Sa	**2/20/21**					2.084						
4-Su	**2/21/21**					1.858						
4-M	**2/22/21**	154	3249	122	2581	2.010	4	88	97	3	63	98
4-T	**2/23/21**	160	3038	100	1896	2.537	4	71	98	5	95	95
4-W	**2/24/21**	204	3446	162	2739	2.273	5	79	98	3	51	98
4-Th	**2/25/21**					2.027						
4-F	**2/26/21**					2.144						
4-Sa	**2/27/21**					2.209						
5-Su	**2/28/21**					1.964						
Daily Minimum												
Average		189	3503	150	2775	2.141	6	121	97	7	133	95
		Report Only	DL: 6090	Report Only	DL: 5940	DL: 2.84	<= 30	<= 711	>= 85	<= 30	<= 711	>= 85
Weekly Average							8	159		11	228	
							<= 45	<= 1066		<= 45	<= 1066	
Maximum		237	4048	196	3493	2.720						
		Report Only	Report Only	Report Only	Report Only	Report Only						
Daily Maximum												
Monthly geometric mean												
Weekly Geometric Mean												

Week	Monitoring Point	Fecal Coliform #/100ml 3/Week Grab	pH Standard Units 1/Day Grab	Temperature Measured Degrees C Continuous Measurement	Temperature (7-DAD Max) Calculated Degrees C 1/Day Calculated
		001	001	001	001
1-M	**2/1/21**		7.2	13.3	13.3
1-T	**2/2/21**	7	7.2	12.8	13.2
1-W	**2/3/21**	2	7.2	12.7	13.2
1-Th	**2/4/21**	2	7.1	13.3	13.2
1-F	**2/5/21**		7.1	13.2	13.1
1-Sa	**2/6/21**		6.9	13.0	13.1
2-Su	**2/7/21**		6.7	13.1	13.1
2-M	**2/8/21**	1	6.8	13.4	13.1
2-T	**2/9/21**	1	6.7	13.4	13.2
2-W	**2/10/21**	1	7.1	13.3	13.3
2-Th	**2/11/21**		7.2	13.1	13.2
2-F	**2/12/21**		6.8	12.9	13.2
2-Sa	**2/13/21**		6.7	12.9	13.2
3-Su	**2/14/21**		6.6	12.1	13.0
3-M	**2/15/21**		6.2	12.0	12.8
3-T	**2/16/21**	2	6.2	11.4	12.5
3-W	**2/17/21**	2	8.0	11.8	12.3
3-Th	**2/18/21**	1	7.2	12.0	12.1
3-F	**2/19/21**		7.4	12.4	12.1
3-Sa	**2/20/21**		7.8	12.5	12.0
4-Su	**2/21/21**		7.5	12.6	12.1
4-M	**2/22/21**	4	7.4	12.8	12.2
4-T	**2/23/21**	1	7.5	12.6	12.4
4-W	**2/24/21**	1	7.2	12.8	12.5
4-Th	**2/25/21**		7.0	12.9	12.7
4-F	**2/26/21**		6.7	12.9	12.7
4-Sa	**2/27/21**		6.4	12.7	12.8
5-Su	**2/28/21**		6.3	12.8	12.8
Daily Minimum			6.2		
			>= 6.0 (RO)		
Average					
Weekly Average					
Maximum					13.3
					Report Only
Daily Maximum			8.0	13.4	
			<= 9.0 (RO)	Report Only	
Monthly geometric mean		2			
		<= 100			
Weekly Geometric Mean		3			
		<= 200			

I certify under penalty of law, that this document and all attachments were prepared under my direction or supervision in accordance with a system designed to assure that qualified personnel properly gather and evaluate the information submitted. Based on my inquiry of the person or persons who manage the system or those persons directly responsible for gathering information, the information submitted is, to the best of my knowledge and belief, true, accurate, and complete. I am aware that there are significant penalties for submitting false information, including the possibility of fine and imprisonment for knowing violations.

Donovan Sheppard	3/15/2021 1:44:25 PM
Signature	**Date**

Washington State Department of Ecology **Discharge Monitoring Report (DMR)**

Permit Number: WA0020486 **Permittee:** MONROE STP

Facility County: Snohomish **Receiving Waterbody:**

Monitoring Period: 03/01/2021 - 03/31/2021 **Outfall:** 001 **Version:** 1

Week	Monitoring Point	Total BOD5 Total Milligrams/L (mg/L) 3/Week Composite sample (24 hour)	BOD5 Calculated Calculated Lbs/Day 3/Week Calculated	Solids (Residue) Total suspended (TSS) Milligrams/L (mg/L) 3/Week Composite sample (24 hour)	Solids (Residue) Total suspended (TSS) Lbs/Day 3/Week Calculated	Flow Million Gallons/Day Continuous Metered/Recorded	Total BOD5 Total Milligrams/L (mg/L) 3/Week Composite sample (24 hour)	BOD5 Calculated Calculated Lbs/Day 3/Week Calculated	Total BOD5 Total Percent Monthly Calculated	Solids (Residue) Total suspended (TSS) Milligrams/L (mg/L) 3/Week Composite sample (24 hour)	Solids (Residue) Total suspended (TSS) Lbs/Day 3/Week Calculated	Solids (Residue) Total suspended (TSS) Percent Monthly Calculated
		IN1	IN1	IN1	IN1	001	001	001	001	001	001	001
1-M	**3/1/21**	199	3382	160	2716	1.889	5	86	97	2	34	99
1-T	**3/2/21**	219	3516	204	3272	2.035	6	90	97	3	48	99
1-W	**3/3/21**	250	3876	134	2076	1.923	4	58	98	3	46	98
1-Th	**3/4/21**					1.858						
1-F	**3/5/21**					1.911						
1-Sa	**3/6/21**					1.929						
2-Su	**3/7/21**					1.747						
2-M	**3/8/21**	220	3430	148	2311	2.035	5	81	98	3	47	98
2-T	**3/9/21**	216	3014	118	1645	1.872	4	62	98	3	42	97
2-W	**3/10/21**	233	3363	90	1300	1.672	5	69	98	4	58	96
2-Th	**3/11/21**					1.732						
2-F	**3/12/21**					1.792						
2-Sa	**3/13/21**					1.726						
3-Su	**3/14/21**					1.691						
3-M	**3/15/21**	258	4025	238	3714	1.771	7	108	97	3	47	99
3-T	**3/16/21**	235	3349	162	2313	1.871	5	72	98	4	57	98
3-W	**3/17/21**	213	3129	170	2501	1.712	6	95	97	5	66	97
3-Th	**3/18/21**					1.764						
3-F	**3/19/21**					1.749						
3-Sa	**3/20/21**					1.806						
4-Su	**3/21/21**					1.665						
4-M	**3/22/21**	252	3808	210	3179	1.883	6	90	98	2	30	99
4-T	**3/23/21**	302	4046	254	3402	1.815	4	54	99	2	27	99
4-W	**3/24/21**	200	3461	150	2600	1.606	6	105	97	3	43	98
4-Th	**3/25/21**					2.078						
4-F	**3/26/21**					1.879						
4-Sa	**3/27/21**					1.798						
5-Su	**3/28/21**					1.794						
5-M	**3/29/21**	181	3853	82	1291	2.061	6	96	97	3	47	96
5-T	**3/30/21**	218	3256	108	1610	1.888	4	65	98	2	30	98
5-W	**3/31/21**	250	3639	196	2854	1.788	5	73	98	3	36	99
Daily Minimum												
Average		230	3476	162	2452	1.832	5	80	98	8	44	98
		Report Only	DL: 6090	Report Only	DL: 5940	DL: 2.84	<= 30	<= 711	>= 85	<= 30	<= 711	>= 85
Weekly Average							6	91		4	57	
							<= 45	<= 1066		<= 45	<= 1066	
Maximum		302	4046	254	3714	2.078						
		Report Only	Report Only	Report Only	Report Only	Report Only						
Daily Maximum												
Monthly geometric mean												
Weekly Geometric Mean												

Week	Monitoring Point	Fecal Coliform #/100ml 3/Week Grab	pH Standard Units 1/Day Grab	Temperature Measured Degrees C Continuous Measurement	Temperature (7-DAD Max) Calculated Degrees C 1/Day Calculated
		001	001	001	001
1-M	**3/1/21**	1	6.7	14.1	13.0
1-T	**3/2/21**	1	6.9	14.4	13.2
1-W	**3/3/21**	1	7.2	14.4	13.5
1-Th	**3/4/21**		7.0	14.5	13.7
1-F	**3/5/21**		7.3	14.5	13.9
1-Sa	**3/6/21**		7.2	14.5	14.2
2-Su	**3/7/21**		7.0	14.4	14.4
2-M	**3/8/21**	1	6.9	14.3	14.4
2-T	**3/9/21**	1	7.3	14.4	14.4
2-W	**3/10/21**	1	7.1	14.4	14.4
2-Th	**3/11/21**		7.1	14.3	14.4
2-F	**3/12/21**		7.0	14.6	14.4
2-Sa	**3/13/21**		6.8	14.6	14.4
3-Su	**3/14/21**		6.7	14.5	14.4
3-M	**3/15/21**	1	7.0	14.3	14.4
3-T	**3/16/21**	2	6.8	14.6	14.5
3-W	**3/17/21**	2	7.3	14.5	14.5
3-Th	**3/18/21**		7.2	14.8	14.6
3-F	**3/19/21**		7.2	14.8	14.6
3-Sa	**3/20/21**		7.0	14.8	14.6
4-Su	**3/21/21**		7.1	14.8	14.7
4-M	**3/22/21**	1	7.2	14.6	14.7
4-T	**3/23/21**	2	7.2	14.9	14.7
4-W	**3/24/21**	2	7.3	15.0	14.8
4-Th	**3/25/21**		7.1	14.7	14.8
4-F	**3/26/21**		7.0	14.8	14.8
4-Sa	**3/27/21**		6.9	14.9	14.8
5-Su	**3/28/21**		7.1	14.8	14.8
5-M	**3/29/21**	1	7.1	14.6	14.8
5-T	**3/30/21**	1	7.1	15.0	14.8
5-W	**3/31/21**	1	7.2	15.2	14.9
Daily Minimum			6.7		
			>= 6.0 (RO)		
Average					
Weekly Average					
Maximum					14.9
					Report Only
Daily Maximum			7.3	15.2	
			<= 9.0 (RO)	Report Only	
Monthly geometric mean		1			
		<= 100			
Weekly Geometric Mean		2			
		<= 200			

I certify under penalty of law, that this document and all attachments were prepared under my direction or supervision in accordance with a system designed to assure that qualified personnel properly gather and evaluate the information submitted. Based on my inquiry of the person or persons who manage the system or those persons directly responsible for gathering information, the information submitted is, to the best of my knowledge and belief, true, accurate, and complete. I am aware that there are significant penalties for submitting false information, including the possibility of fine and imprisonment for knowing violations.

Donovan Sheppard

Signature

4/15/2021 10:24:10 AM

Date

Washington State Department of Ecology **Discharge Monitoring Report (DMR)**

Permit Number: WA0020486 **Permittee:** MONROE STP

Facility County: Snohomish **Receiving Waterbody:**

Monitoring Period: 04/01/2021 - 04/30/2021 **Outfall:** 001 **Version:** 1

Week	Monitoring Point	Total BOD5 Total Milligrams/L (mg/L) 3/Week Composite sample (24 hour)	BOD5 Calculated Calculated Lbs/Day 3/Week Calculated	Solids (Residue) Total suspended (TSS) Milligrams/L (mg/L) 3/Week Composite sample (24 hour)	Solids (Residue) Total suspended (TSS) Lbs/Day 3/Week Calculated	Flow Million Gallons/Day Continuous Metered/Recorded	Total BOD5 Total Milligrams/L (mg/L) 3/Week Composite sample (24 hour)	BOD5 Calculated Calculated Lbs/Day 3/Week Calculated	Total BOD5 Total Percent Monthly Calculated	Solids (Residue) Total suspended (TSS) Milligrams/L (mg/L) 3/Week Composite sample (24 hour)	Solids (Residue) Total suspended (TSS) Lbs/Day 3/Week Calculated	Solids (Residue) Total suspended (TSS) Percent Monthly Calculated
		IN1	IN1	IN1	IN1	001	001	001	001	001	001	001
1-Th	**4/1/21**					1.746						
1-F	**4/2/21**					1.868						
1-Sa	**4/3/21**					1.300						
2-Su	**4/4/21**					1.232						
2-M	**4/5/21**	254	3721	206	3020	1.222	7	101	97	2	29	99
2-T	**4/6/21**	204	3136	158	2434	1.758	7	107	97	1	15	99
2-W	**4/7/21**	250	3973	162	2579	1.847	6	98	98	2	24	99
2-Th	**4/8/21**					1.909						
2-F	**4/9/21**					1.874						
2-Sa	**4/10/21**					1.841						
3-Su	**4/11/21**					1.767						
3-M	**4/12/21**	281	3748	210	2806	1.724	6	82	98	6	80	97
3-T	**4/13/21**	227	3203	138	1949	1.602	5	71	98	3	42	98
3-W	**4/14/21**	232	2726	158	1859	1.693	7	84	97	5	53	97
3-Th	**4/15/21**					1.411						
3-F	**4/16/21**					1.454						
3-Sa	**4/17/21**					1.684						
4-Su	**4/18/21**					1.704						
4-M	**4/19/21**	275	3674	156	2084	1.196	7	99	97	4	53	97
4-T	**4/20/21**	273	3917	68	975	1.602	5	73	98	5	72	93
4-W	**4/21/21**	305	3608	206	2438	1.720	5	57	98	4	41	98
4-Th	**4/22/21**					1.419						
4-F	**4/23/21**					1.677						
4-Sa	**4/24/21**					1.359						
5-Su	**4/25/21**					1.863						
5-M	**4/26/21**	254	3747	182	2682	1.415	7	105	97	5	74	97
5-T	**4/27/21**	289	3349	194	2247	1.767	4	49	99	4	46	98
5-W	**4/28/21**	251	3481	228	3157	1.389	7	100	97	4	55	98
5-Th	**4/29/21**					1.660						
5-F	**4/30/21**					1.386						
Daily Minimum												
Average		258	3524	172	2353	1.603	6	85	98	4	49	98
		Report Only	DL: 6090	Report Only	DL: 5940	DL: 2.84	<= 30	<= 711	>= 85	<= 30	<= 711	>= 85
Weekly Average							7	102		5	58	
							<= 45	<= 1066		<= 45	<= 1066	
Maximum		305	3973	228	3157	1.909						
		Report Only	Report Only	Report Only	Report Only	Report Only						
Daily Maximum												
Monthly geometric mean												
Weekly Geometric Mean												

Week	Monitoring Point	Fecal Coliform #/100ml 3/Week Grab	pH Standard Units 1/Day Grab	Temperature Measured Degrees C Continuous Measurement	Temperature (7-DAD Max) Calculated Degrees C 1/Day Calculated
		001	001	001	001
1-Th	**4/1/21**		7.1	15.0	14.9
1-F	**4/2/21**		7.2	16.3	15.1
1-Sa	**4/3/21**		7.2	15.9	15.3
2-Su	**4/4/21**		7.1	15.9	15.4
2-M	**4/5/21**	1	7.2	16.2	15.6
2-T	**4/6/21**	1	7.2	15.9	15.8
2-W	**4/7/21**	1	7.0	15.4	15.8
2-Th	**4/8/21**		7.2	15.4	15.9
2-F	**4/9/21**		6.9	15.2	15.7
2-Sa	**4/10/21**		6.7	15.0	15.6
3-Su	**4/11/21**		6.9	15.2	15.5
3-M	**4/12/21**	2	7.2	15.7	15.4
3-T	**4/13/21**	1	7.2	16.1	15.4
3-W	**4/14/21**	1	7.4	16.8	15.6
3-Th	**4/15/21**		7.1	18.9	16.1
3-F	**4/16/21**		7.1	17.2	16.4
3-Sa	**4/17/21**		6.9	17.5	16.8
4-Su	**4/18/21**		6.9	18.1	17.2
4-M	**4/19/21**	1	7.0	18.1	17.5
4-T	**4/20/21**	1	7.1	18.4	17.9
4-W	**4/21/21**	1	7.1	18.8	18.1
4-Th	**4/22/21**		7.1	18.4	18.1
4-F	**4/23/21**		7.2	18.6	18.3
4-Sa	**4/24/21**		6.9	18.1	18.3
5-Su	**4/25/21**		7.1	18.0	18.3
5-M	**4/26/21**	1	7.0	17.8	18.3
5-T	**4/27/21**	1	7.2	18.1	18.2
5-W	**4/28/21**	2	7.3	18.1	18.1
5-Th	**4/29/21**		7.2	19.7	18.3
5-F	**4/30/21**		7.3	18.5	18.3
Daily Minimum			6.7		
			>= 6.0 (RO)		
Average					
Weekly Average					
Maximum					18.3
					Report Only
Daily Maximum			7.4	19.7	
			<= 9.0 (RO)	Report Only	
Monthly geometric mean		1			
		<= 100			
Weekly Geometric Mean		2			
		<= 200			

I certify under penalty of law, that this document and all attachments were prepared under my direction or supervision in accordance with a system designed to assure that qualified personnel properly gather and evaluate the information submitted. Based on my inquiry of the person or persons who manage the system or those persons directly responsible for gathering information, the information submitted is, to the best of my knowledge and belief, true, accurate, and complete. I am aware that there are significant penalties for submitting false information, including the possibility of fine and imprisonment for knowing violations.

Donovan Sheppard	5/13/2021 8:15:10 AM
Signature	**Date**

Washington State Department of Ecology **Discharge Monitoring Report (DMR)**

Permit Number: WA0020486 **Permittee:** MONROE STP

Facility County: Snohomish **Receiving Waterbody:**

Monitoring Period: 04/01/2021 - 06/30/2021 **Outfall:** 001 **Version:** 1

Week	Monitoring Point	Phosphorus Total Milligrams/L (mg/L) Quarterly Composite sample (24 hour)	Total Reactive Phosphorus Total Reactive Milligrams/L (mg/L) Quarterly Composite sample (24 hour)	Ammonia Total Milligrams/L (mg/L) Quarterly Composite sample (24 hour)	Nitrate + Nitrite Total Milligrams/L (mg/L) Quarterly Composite sample (24 hour)	TKN Total Milligrams/L (mg/L) Quarterly Composite sample (24 hour)
		001	001	001	001	001
2-T	**4/6/21**	3.32	3.2	0.432	8.8	3.54
Average		3.32	3.2	0.432	8.8	3.54
		Report Only	Report Only	Report Only	Report Only	Report Only

I certify under penalty of law, that this document and all attachments were prepared under my direction or supervision in accordance with a system designed to assure that qualified personnel properly gather and evaluate the information submitted. Based on my inquiry of the person or persons who manage the system or those persons directly responsible for gathering information, the information submitted is, to the best of my knowledge and belief, true, accurate, and complete. I am aware that there are significant penalties for submitting false information, including the possibility of fine and imprisonment for knowing violations.

Donovan Sheppard — **Signature**

4/20/2021 12:56:12 PM — **Date**

Washington State Department of Ecology **Discharge Monitoring Report (DMR)**

Permit Number: WA0020486 **Permittee:** MONROE STP

Facility County: Snohomish **Receiving Waterbody:**

Monitoring Period: 05/01/2021 - 05/31/2021 **Outfall:** 001 **Version:** 1

Week	Monitoring Point	Total BOD5 Total Milligrams/L (mg/L) 3/Week Composite sample (24 hour)	BOD5 Calculated Calculated Lbs/Day 3/Week Calculated	Solids (Residue) Total suspended (TSS) Milligrams/L (mg/L) 3/Week Composite sample (24 hour)	Solids (Residue) Total suspended (TSS) Lbs/Day 3/Week Calculated	Flow Million Gallons/Day Continuous Metered/Recorded	Total BOD5 Total Milligrams/L (mg/L) 3/Week Composite sample (24 hour)	BOD5 Calculated Calculated Lbs/Day 3/Week Calculated	Total BOD5 Total Percent Monthly Calculated	Solids (Residue) Total suspended (TSS) Milligrams/L (mg/L) 3/Week Composite sample (24 hour)	Solids (Residue) Total suspended (TSS) Lbs/Day 3/Week Calculated	Solids (Residue) Total suspended (TSS) Percent Monthly Calculated
		IN1	IN1	IN1	IN1	001	001	001	001	001	001	001
1-Sa	**5/1/21**					1.662						
2-Su	**5/2/21**					1.323						
2-M	**5/3/21**	296	3580	236	2854	1.550	11	133	96	4	48	98
2-T	**5/4/21**	260	3554	142	1941	1.450	6	82	98	3	41	98
2-W	**5/5/21**	310	3547	152	1739	1.639	5	57	98	3	34	98
2-Th	**5/6/21**					1.372						
2-F	**5/7/21**					1.612						
2-Sa	**5/8/21**					1.454						
3-Su	**5/9/21**					1.586						
3-M	**5/10/21**	254	3860	158	2401	1.116	11	167	96	3	46	98
3-T	**5/11/21**	342	3346	230	2250	1.822	6	59	98	2	20	99
3-W	**5/12/21**	257	3822	122	1814	1.173	6	89	98	2	22	99
3-Th	**5/13/21**					1.783						
3-F	**5/14/21**					1.233						
3-Sa	**5/15/21**					1.752						
4-Su	**5/16/21**					1.121						
4-M	**5/17/21**	343	3790	178	1967	1.7742	13	144	96	5	55	97
4-T	**5/18/21**	303	3634	204	2447	1.325	8	96	97	4	48	98
4-W	**5/19/21**	216	3007	136	1893	1.438	7	97	97	4	49	97
4-Th	**5/20/21**					1.669						
4-F	**5/21/21**					1.228						
4-Sa	**5/22/21**					1.284						
5-Su	**5/23/21**					1.278						
5-M	**5/24/21**	252	3737	172	2551	1.523	14	208	94	8	119	95
5-T	**5/25/21**	321	4396	324	4437	1.774	8	110	98	6	82	98
5-W	**5/26/21**	316	4246	258	3466	1.778	6	81	98	4	47	99
5-Th	**5/27/21**					1.642						
5-F	**5/28/21**					1.611						
5-Sa	**5/29/21**					1.492						
6-Su	**5/30/21**					1.395						
6-M	**5/31/21**					1.335						
Daily Minimum												
Average		289	3710	193	2480	1.494	8	110	97	4	51	98
		Report Only	DL: 6090	Report Only	DL: 5940	DL: 2.84	<= 30	<= 711	>= 85	<= 30	<= 711	>= 85
Weekly Average							9	133		6	83	
							<= 45	<= 1066		<= 45	<= 1066	
Maximum		343	4396	324	4437	1.822						
		Report Only	Report Only	Report Only	Report Only	Report Only						
Daily Maximum												
Monthly geometric mean												
Weekly Geometric Mean												

Week	Monitoring Point	Fecal Coliform #/100ml 3/Week Grab	pH Standard Units 1/Day Grab	Temperature Measured Degrees C Continuous Measurement	Temperature (7-DAD Max) Calculated Degrees C 1/Day Calculated
		001	001	001	001
1-Sa	**5/1/21**		7.2	18.6	18.4
2-Su	**5/2/21**		7.3	18.4	18.5
2-M	**5/3/21**	2	7.4	18.2	18.5
2-T	**5/4/21**	1	7.2	18.4	18.6
2-W	**5/5/21**	1	7.2	18.7	18.7
2-Th	**5/6/21**		7.2	18.6	18.5
2-F	**5/7/21**		6.9	18.4	18.5
2-Sa	**5/8/21**		6.9	18.5	18.5
3-Su	**5/9/21**		6.7	18.8	18.5
3-M	**5/10/21**	1	7.2	18.8	18.6
3-T	**5/11/21**	1	7.4	19.6	18.8
3-W	**5/12/21**	1	7.3	19.5	18.9
3-Th	**5/13/21**		7.2	20.2	19.1
3-F	**5/14/21**		7.3	19.9	19.3
3-Sa	**5/15/21**		7.1	20.6	19.6
4-Su	**5/16/21**		7.2	20.2	19.8
4-M	**5/17/21**	1	7.1	20.7	20.1
4-T	**5/18/21**	4	7.2	20	20.2
4-W	**5/19/21**	1	7.2	19.9	20.2
4-Th	**5/20/21**		7.2	19.9	20.2
4-F	**5/21/21**		7.2	19.8	20.2
4-Sa	**5/22/21**		7.1	19.8	20.0
5-Su	**5/23/21**	3	7.1	19.3	19.9
5-M	**5/24/21**	1	7.0	19.2	19.7
5-T	**5/25/21**	3	7.0	19.4	19.6
5-W	**5/26/21**		7.2	19.8	19.6
5-Th	**5/27/21**		7.2	19.7	19.6
5-F	**5/28/21**		7.2	19.8	19.6
5-Sa	**5/29/21**		7.0	20.2	19.6
6-Su	**5/30/21**		7.1	20.2	19.8
6-M	**5/31/21**		7.0	20.7	20.0
Daily Minimum			6.7		
			>= 6.0 (RO)		
Average					
Weekly Average					
Maximum					20.2
					Report Only
Daily Maximum			7.4	20.7	
			<= 9.0 (RO)	Report Only	
Monthly geometric mean		1			
		<= 100			
Weekly Geometric Mean		2			
		<= 200			

I certify under penalty of law, that this document and all attachments were prepared under my direction or supervision in accordance with a system designed to assure that qualified personnel properly gather and evaluate the information submitted. Based on my inquiry of the person or persons who manage the system or those persons directly responsible for gathering information, the information submitted is, to the best of my knowledge and belief, true, accurate, and complete. I am aware that there are significant penalties for submitting false information, including the possibility of fine and imprisonment for knowing violations.

Donovan Sheppard

Signature

6/15/2021 10:39:01 AM

Date

Washington State Department of Ecology **Discharge Monitoring Report (DMR)**

Permit Number: WA0020486 **Permittee:** MONROE STP

Facility County: Snohomish **Receiving Waterbody:**

Monitoring Period: 06/01/2021 - 06/30/2021 **Outfall:** 001 **Version:** 1

Week	Monitoring Point	Total BOD5 Total Milligrams/L (mg/L) 3/Week Composite sample (24 hour)	BOD5 Calculated Calculated Lbs/Day 3/Week Calculated	Solids (Residue) Total suspended (TSS) Milligrams/L (mg/L) 3/Week Composite sample (24 hour)	Solids (Residue) Total suspended (TSS) Lbs/Day 3/Week Calculated	Flow Million Gallons/Day Continuous Metered/Recorded	Total BOD5 Total Milligrams/L (mg/L) 3/Week Composite sample (24 hour)	BOD5 Calculated Calculated Lbs/Day 3/Week Calculated	Total BOD5 Total Percent Monthly Calculated	Solids (Residue) Total suspended (TSS) Milligrams/L (mg/L) 3/Week Composite sample (24 hour)	Solids (Residue) Total suspended (TSS) Lbs/Day 3/Week Calculated	Solids (Residue) Total suspended (TSS) Percent Monthly Calculated
		IN1	IN1	IN1	IN1	001	001	001	001	001	001	001
1-T	**6/1/21**	308	4030	218	2853	1.447	4	52	99	8	105	96
1-W	**6/2/21**	292	3687	214	2702	1.569	3	38	99	6	76	97
1-Th	**6/3/21**	300	3923	310	4054	1.514	5	65	98	7	92	98
1-F	**6/4/21**					1.568						
1-Sa	**6/5/21**					1.428						
2-Su	**6/6/21**					1.707						
2-M	**6/7/21**	256	3587	196	2746	1.792	12	168	95	7	98	96
2-T	**6/8/21**	292	2975	216	2792	1.680	8	103	97	5	65	98
2-W	**6/9/21**	298	3740	160	2008	1.550	7	88	98	6	69	97
2-Th	**6/10/21**					1.505						
2-F	**6/11/21**					1.466						
2-Sa	**6/12/21**					1.685						
3-Su	**6/13/21**					1.511						
3-M	**6/14/21**	258	3673	232	3303	1.768	17	242	93	4	57	98
3-T	**6/15/21**	288	3805	228	3012	1.707	7	92	98	4	53	98
3-W	**6/16/21**	315	3977	274	3460	1.584	5	63	98	5	57	98
3-Th	**6/17/21**					1.514						
3-F	**6/18/21**					1.514						
3-Sa	**6/19/21**					1.179						
4-Su	**6/20/21**					1.409						
4-M	**6/21/21**	303	4172	228	3139	1.421	23	317	92	8	110	96
4-T	**6/22/21**	342	4019	250	2938	1.651	8	94	98	7	82	97
4-W	**6/23/21**	243	2975	122	1494	1.409	5	61	98	7	86	94
4-Th	**6/24/21**					1.468						
4-F	**6/25/21**					1.428						
4-Sa	**6/26/21**					1.441						
5-Su	**6/27/21**					1.347						
5-M	**6/28/21**					1.393						
5-T	**6/29/21**					1.495						
5-W	**6/30/21**	220	2613	160	11900	1.479	6	71	97	2	24	99
Daily Minimum												
Average		286	3629	216	2800	1.521	8	112	97	6	75	97
		Report Only	DL: 6090	Report Only	DL: 5940	DL: 2.84	<= 30	<= 711	>= 85	<= 30	<= 711	>= 85
Weekly Average							12	133		7	93	
							<= 45	<= 1066		<= 45	<= 1066	
Maximum		342	4172	310	4054	1.792						
		Report Only	Report Only	Report Only	Report Only	Report Only						
Daily Maximum												
Monthly geometric mean												
Weekly Geometric Mean												

Week	Monitoring Point	Fecal Coliform #/100ml 3/Week Grab	pH Standard Units 1/Day Grab	Temperature Measured Degrees C Continuous Measurement	Temperature (7-DAD Max) Calculated Degrees C 1/Day Calculated
		001	001	001	001
1-T	**6/1/21**	1	7.0	21.5	20.2
1-W	**6/2/21**	1	7.0	22.1	20.5
1-Th	**6/3/21**	1	7.0	22.6	20.8
1-F	**6/4/21**		7.1	22.1	21.1
1-Sa	**6/5/21**		7.0	21.3	21.3
2-Su	**6/6/21**		7.1	20.7	21.4
2-M	**6/7/21**	1	6.8	20.2	21.5
2-T	**6/8/21**	4	8.2	21.1	21.4
2-W	**6/9/21**	2	8.0	21.1	21.3
2-Th	**6/10/21**		7.6	21.0	21.1
2-F	**6/11/21**		7.7	20.3	20.8
2-Sa	**6/12/21**		7.1	21.1	20.8
3-Su	**6/13/21**		6.8	20.8	20.8
3-M	**6/14/21**	1	7.1	20.9	20.9
3-T	**6/15/21**	1	7.1	21.5	21.0
3-W	**6/16/21**	1	7.2	21.7	21.0
3-Th	**6/17/21**		7.0	21.9	21.2
3-F	**6/18/21**		6.8	22.0	21.4
3-Sa	**6/19/21**		7.2	22.0	21.5
4-Su	**6/20/21**		7.2	22.3	21.7
4-M	**6/21/21**	3	7.5	22.7	22.0
4-T	**6/22/21**	1	7.5	23.3	22.3
4-W	**6/23/21**	1	7.3	23.5	22.5
4-Th	**6/24/21**		7.3	23.6	22.8
4-F	**6/25/21**		7.2	23.7	23.0
4-Sa	**6/26/21**		7.0	24.3	23.3
5-Su	**6/27/21**		7.0	24.5	23.7
5-M	**6/28/21**	1	7.3	25.0	24.0
5-T	**6/29/21**	1	7.0	25.6	24.3
5-W	**6/30/21**	1	7.1	25.2	24.6
Daily Minimum			6.8		
			>= 6.0 (RO)		
Average					
Weekly Average					
Maximum					24.6
					Report Only
Daily Maximum			8.2	25.6	
			<= 9.0 (RO)	Report Only	
Monthly geometric mean		1			
		<= 100			
Weekly Geometric Mean		3			
		<= 200			

I certify under penalty of law, that this document and all attachments were prepared under my direction or supervision in accordance with a system designed to assure that qualified personnel properly gather and evaluate the information submitted. Based on my inquiry of the person or persons who manage the system or those persons directly responsible for gathering information, the information submitted is, to the best of my knowledge and belief, true, accurate, and complete. I am aware that there are significant penalties for submitting false information, including the possibility of fine and imprisonment for knowing violations.

Donovan Sheppard

Signature

7/13/2021 2:16:54 PM

Date

Washington State Department of Ecology **Discharge Monitoring Report (DMR)**

Permit Number: WA0020486 **Permittee:** MONROE STP

Facility County: Snohomish **Receiving Waterbody:**

Monitoring Period: 07/01/2021 - 07/31/2021 **Outfall:** 001 **Version:** 1

Week	Monitoring Point	Total BOD5 Total Milligrams/L (mg/L) 3/Week Composite sample (24 hour)	BOD5 Calculated Calculated Lbs/Day 3/Week Calculated	Solids (Residue) Total suspended (TSS) Milligrams/L (mg/L) 3/Week Composite sample (24 hour)	Solids (Residue) Total suspended (TSS) Lbs/Day 3/Week Calculated	Flow Million Gallons/Day Continuous Metered/Recorded	Total BOD5 Total Milligrams/L (mg/L) 3/Week Composite sample (24 hour)	BOD5 Calculated Calculated Lbs/Day 3/Week Calculated	Total BOD5 Total Percent Monthly Calculated	Solids (Residue) Total suspended (TSS) Milligrams/L (mg/L) 3/Week Composite sample (24 hour)	Solids (Residue) Total suspended (TSS) Lbs/Day 3/Week Calculated	Solids (Residue) Total suspended (TSS) Percent Monthly Calculated
		IN1	IN1	IN1	IN1	001	001	001	001	001	001	001
1-Th	**7/1/21**	189	2309	34	415	1.424	7	86	96	4	49	88
1-F	**7/2/21**	264	3140	174	2069	1.465	6	71	98	7	77	96
1-Sa	**7/3/21**					1.426						
2-Su	**7/4/21**					1.341						
2-M	**7/5/21**	286	3332	160	1864	1.333	8	93	97	3	35	98
2-T	**7/6/21**	276	3430	204	2535	1.397	6	75	98	5	62	98
2-W	**7/7/21**	208	2505	92	1108	1.490	8	96	96	3	36	97
2-Th	**7/8/21**					1.444						
2-F	**7/9/21**					1.405						
2-Sa	**7/10/21**					1.462						
3-Su	**7/11/21**					1.132						
3-M	**7/12/21**	304	2769	208	1894	1.041	11	100	96	7	64	97
3-T	**7/13/21**	220	3077	138	1930	1.092	7	98	97	10	140	93
3-W	**7/14/21**	240	3717	116	1797	1.677	7	108	97	9	139	92
3-Th	**7/15/21**					1.857						
3-F	**7/16/21**					1.396						
3-Sa	**7/17/21**					1.574						
4-Su	**7/18/21**					1.304						
4-M	**7/19/21**	263	3270	198	2462	1.344	12	149	95	7	87	96
4-T	**7/20/21**	252	2974	180	2124	1.491	9	106	96	11	130	94
4-W	**7/21/21**	287	3227	240	2698	1.415	5	56	98	5	56	98
4-Th	**7/22/21**					1.348						
4-F	**7/23/21**					1.388						
4-Sa	**7/24/21**					1.414						
5-Su	**7/25/21**					1.341						
5-M	**7/26/21**	300	3605	244	2932	1.318	11	132	96	7	84	97
5-T	**7/27/21**	254	2928	164	1890	1.441	6	69	98	5	58	97
5-W	**7/28/21**	238	2707	120	1365	1.382	5	57	98	7	80	94
5-Th	**7/29/21**					1.364						
5-F	**7/30/21**					1.435						
5-Sa	**7/31/21**					1.413						
Daily Minimum												
Average		256	3071	162	1935	1.398	8	93	97	6	78	95
		Report Only	DL: 6090	Report Only	DL: 5940	DL: 2.84	<= 30	<= 711	>= 85	<= 30	<= 711	>= 85
Weekly Average							8	103		8	114	
							<= 45	<= 1066		<= 45	<= 1066	
Maximum		304	3717	244	2932	1.857						
		Report Only	Report Only	Report Only	Report Only	Report Only						
Daily Maximum												
Monthly geometric mean												
Weekly Geometric Mean												

Week	Monitoring Point	Fecal Coliform #/100ml 3/Week Grab	pH Standard Units 1/Day Grab	Temperature Measured Degrees C Continuous Measurement	Temperature (7-DAD Max) Calculated Degrees C 1/Day Calculated
		001	001	001	001
1-Th	**7/1/21**		7.1	23.1	24.5
1-F	**7/2/21**		7.1	23.4	24.4
1-Sa	**7/3/21**		7.1	23.3	24.3
2-Su	**7/4/21**		7.0	23.1	24.1
2-M	**7/5/21**		6.9	23.0	23.8
2-T	**7/6/21**	1	6.9	23.0	23.4
2-W	**7/7/21**	1	7.1	23.0	23.1
2-Th	**7/8/21**	1	7.2	22.9	23.1
2-F	**7/9/21**		7.2	23.5	23.1
2-Sa	**7/10/21**		7.0	22.9	23.1
3-Su	**7/11/21**		7.1	22.8	23.0
3-M	**7/12/21**	1	7.1	22.6	23.0
3-T	**7/13/21**	2	7.0	22.4	22.9
3-W	**7/14/21**	1	7.0	23.2	22.9
3-Th	**7/15/21**		6.9	23.1	22.9
3-F	**7/16/21**		7.0	22.6	22.8
3-Sa	**7/17/21**		6.9	22.7	22.8
4-Su	**7/18/21**		7.0	22.8	22.8
4-M	**7/19/21**	1	7.1	22.8	22.8
4-T	**7/20/21**	1	7.1	22.8	22.9
4-W	**7/21/21**	1	7.0	22.7	22.8
4-Th	**7/22/21**		7.2	22.8	22.7
4-F	**7/23/21**		7.1	23.0	22.8
4-Sa	**7/24/21**		7.0	23.1	22.9
5-Su	**7/25/21**		6.9	23.2	22.9
5-M	**7/26/21**	2	7.1	23.0	22.9
5-T	**7/27/21**	1	7.1	23.6	23.1
5-W	**7/28/21**	3	7.3	23.6	23.2
5-Th	**7/29/21**		7.1	23.7	23.3
5-F	**7/30/21**		7.3	23.8	23.4
5-Sa	**7/31/21**		7.0	23.4	23.5
Daily Minimum			6.9		
			>= 6.0 (RO)		
Average					
Weekly Average					
Maximum					24.5
					Report Only
Daily Maximum			7.3	23.8	
			<= 9.0 (RO)	Report Only	
Monthly geometric mean		1			
		<= 100			
Weekly Geometric Mean		2			
		<= 200			

I certify under penalty of law, that this document and all attachments were prepared under my direction or supervision in accordance with a system designed to assure that qualified personnel properly gather and evaluate the information submitted. Based on my inquiry of the person or persons who manage the system or those persons directly responsible for gathering information, the information submitted is, to the best of my knowledge and belief, true, accurate, and complete. I am aware that there are significant penalties for submitting false information, including the possibility of fine and imprisonment for knowing violations.

Donovan Sheppard	8/13/2021 1:28:31 PM
Signature	**Date**

Washington State Department of Ecology **Discharge Monitoring Report (DMR)**

Permit Number: WA0020486 **Permittee:** MONROE STP

Facility County: Snohomish **Receiving Waterbody:**

Monitoring Period: 08/01/2021 - 08/31/2021 **Outfall:** 001 **Version:** 1

Week	Monitoring Point	Total BOD5 Total Milligrams/L (mg/L) 3/Week Composite sample (24 hour)	BOD5 Calculated Calculated Lbs/Day 3/Week Calculated	Solids (Residue) Total suspended (TSS) Milligrams/L (mg/L) 3/Week Composite sample (24 hour)	Solids (Residue) Total suspended (TSS) Lbs/Day 3/Week Calculated	Flow Million Gallons/Day Continuous Metered/Recorded	Total BOD5 Total Milligrams/L (mg/L) 3/Week Composite sample (24 hour)	BOD5 Calculated Calculated Lbs/Day 3/Week Calculated	Total BOD5 Total Percent Monthly Calculated	Solids (Residue) Total suspended (TSS) Milligrams/L (mg/L) 3/Week Composite sample (24 hour)	Solids (Residue) Total suspended (TSS) Lbs/Day 3/Week Calculated	Solids (Residue) Total suspended (TSS) Percent Monthly Calculated
		IN1	IN1	IN1	IN1	001	001	001	001	001	001	001
1-Su	**8/1/21**					1.300						
1-M	**8/2/21**	270	3517	254	3309	1.352	10	130	96	8	104	97
1-T	**8/3/21**	208	2384	114	1306	1.562	5	57	98	6	69	95
1-W	**8/4/21**	299	3519	226	2660	1.374	4	47	99	3	35	99
1-Th	**8/5/21**					1.411						
1-F	**8/6/21**					1.369						
1-Sa	**8/7/21**					1.501						
2-Su	**8/8/21**					1.291						
2-M	**8/9/21**	279	3616	216	2799	1.304	10	130	96	7	91	97
2-T	**8/10/21**	274	3138	214	2450	1.554	4	46	99	4	46	98
2-W	**8/11/21**	341	3987	302	3531	1.373	6	70	98	7	76	98
2-Th	**8/12/21**					1.402						
2-F	**8/13/21**					1.354						
2-Sa	**8/14/21**					1.542						
3-Su	**8/15/21**					1.220						
3-M	**8/16/21**	301	4340	216	3115	1.325	5	72	98	6	87	97
3-T	**8/17/21**	208	2087	258	2589	1.729	6	60	97	7	70	97
3-W	**8/18/21**	243	2937	86	1039	1.203	5	60	98	6	73	93
3-Th	**8/19/21**					1.449						
3-F	**8/20/21**					1.404						
3-Sa	**8/21/21**					1.456						
4-Su	**8/22/21**					1.332						
4-M	**8/23/21**	264	3571	150	2029	1.354	5	68	98	6	81	96
4-T	**8/24/21**	300	3533	212	2497	1.622	4	47	99	2	24	99
4-W	**8/25/21**	276	3340	250	3025	1.412	4	48	99	6	73	98
4-Th	**8/26/21**					1.451						
4-F	**8/27/21**					1.460						
4-Sa	**8/28/21**					1.377						
5-Su	**8/29/21**					1.553						
5-M	**8/30/21**					1.328						
5-T	**8/31/21**	308	3668	276	3287	1.510	5	60	98	7	7	97
Daily Minimum												
Average		275	3357	213	2587	1.412	6	69	98	6	70	97
		Report Only	DL: 6090	Report Only	DL: 5940	DL: 2.84	<= 30	<= 711	>= 85	<= 30	<= 711	>= 85
Weekly Average							7	82		6	76	
							<= 45	<= 1066		<= 45	<= 1066	
Maximum		341	4340	302	3531	1.729						
		Report Only	Report Only	Report Only	Report Only	Report Only						
Daily Maximum												
Monthly geometric mean												
Weekly Geometric Mean												

Week	Monitoring Point	Fecal Coliform #/100ml 3/Week Grab	pH Standard Units 1/Day Grab	Temperature Measured Degrees C Continuous Measurement	Temperature (7-DAD Max) Calculated Degrees C 1/Day Calculated
		001	001	001	001
1-Su	**8/1/21**		6.9	23.4	23.5
1-M	**8/2/21**	2	7.1	23.5	23.6
1-T	**8/3/21**	1	7.1	23.8	23.6
1-W	**8/4/21**	1	7.2	24.0	23.7
1-Th	**8/5/21**		7.1	24.0	23.7
1-F	**8/6/21**		7.1	23.6	23.7
1-Sa	**8/7/21**		7.2	23.2	23.7
2-Su	**8/8/21**		7.1	23.2	23.6
2-M	**8/9/21**	1	7.2	23.2	23.6
2-T	**8/10/21**	2	7.1	23.6	23.5
2-W	**8/11/21**	1	7.1	23.9	23.5
2-Th	**8/12/21**		7.1	24.0	23.5
2-F	**8/13/21**		7.0	24.0	23.6
2-Sa	**8/14/21**		7.1	24.5	23.8
3-Su	**8/15/21**		7.2	24.6	24.0
3-M	**8/16/21**	2	7.1	24.0	24.1
3-T	**8/17/21**	6	7.3	23.9	24.1
3-W	**8/18/21**	2	7.0	23.5	24.1
3-Th	**8/19/21**		6.9	23.5	24.0
3-F	**8/20/21**		6.9	23.0	23.9
3-Sa	**8/21/21**		6.7	22.9	23.6
4-Su	**8/22/21**		7.1	22.7	23.4
4-M	**8/23/21**	1	7.2	22.5	23.2
4-T	**8/24/21**	1	7.2	22.6	23.0
4-W	**8/25/21**	1	7.3	22.5	22.8
4-Th	**8/26/21**		7.2	22.6	22.7
4-F	**8/27/21**		7.1	22.5	22.6
4-Sa	**8/28/21**		7.0	22.7	22.6
5-Su	**8/29/21**		7.0	22.7	22.6
5-M	**8/30/21**		7.0	22.4	22.6
5-T	**8/31/21**	3	7.0	22.4	22.5
Daily Minimum			6.7		
			>= 6.0 (RO)		
Average					
Weekly Average					
Maximum					24.1
					Report Only
Daily Maximum			7.3	24.6	
			<= 9.0 (RO)	Report Only	
Monthly geometric mean		2			
		<= 100			
Weekly Geometric Mean		3			
		<= 200			

I certify under penalty of law, that this document and all attachments were prepared under my direction or supervision in accordance with a system designed to assure that qualified personnel properly gather and evaluate the information submitted. Based on my inquiry of the person or persons who manage the system or those persons directly responsible for gathering information, the information submitted is, to the best of my knowledge and belief, true, accurate, and complete. I am aware that there are significant penalties for submitting false information, including the possibility of fine and imprisonment for knowing violations.

Donovan Sheppard	9/15/2021 11:18:15 AM
Signature	**Date**

Washington State Department of Ecology **Discharge Monitoring Report (DMR)**

Permit Number: WA0020486 **Permittee:** MONROE STP

Facility County: Snohomish **Receiving Waterbody:**

Monitoring Period: 01/01/2021 - 12/31/2021 **Outfall:** 001 **Version:** 1

Sample Date: 9/1/2021

Monitoring Point	Parameter	Fraction	Units	Sample	Qualifier Code	Required Detection Level	Required Quantitation Level	Actual Detection Level	Actual Quantitation Level
001	2,4,6-Trichlorophenol		Micrograms/L (ug/L)	<0.2		2	4	0.07	0.2
001	2,4-Dichlorophenol		Micrograms/L (ug/L)	<0.2		0.5	1	0.14	0.2
001	2,4-Dimethylphenol		Micrograms/L (ug/L)	<0.2		0.5	1	0.14	0.2
001	2,4-Dinitrophenol		Micrograms/L (ug/L)	<0.5		1	2	0.34	0.5
001	2-Chlorophenol		Micrograms/L (ug/L)	<0.2		1	2	0.14	0.2
001	2-Nitrophenol		Micrograms/L (ug/L)	<0.2		0.5	1	0.14	0.2
001	4,6-Dinitro-2-Methylphenol (4,6 dinitro-o-cresol)(2-methyl-4,6-dinitrophenol)		Micrograms/L (ug/L)	<0.2		1	2	0.14	0.2
001	4-Chloro-3-Methylphenol (Parachlorometa cresol)		Micrograms/L (ug/L)	<0.2		1	2	0.14	0.2
001	4-Nitrophenol		Micrograms/L (ug/L)	<0.2		0.5	1	0.14	0.2
001	Pentachlorophenol		Micrograms/L (ug/L)	<0.2		0.5	1	0.14	0.2
001	Phenol		Micrograms/L (ug/L)	<0.2		2	4	0.14	0.2
001	Dimethyl phthalate		Micrograms/L (ug/L)	<0.1		1.6	6.4	0.07	0.1
001	Diethyl phthalate		Micrograms/L (ug/L)	0.3		1.9	7.6	0.07	0.1
001	Dibutyl phthalate (Di-n-butyl phthalate)		Micrograms/L (ug/L)	0.1		0.5	1	0.07	0.1
001	Hexachlorobenzene		Micrograms/L (ug/L)	<0.1		0.3	0.6	0.07	0.1
001	Fluorene		Micrograms/L (ug/L)	<0.1		0.3	0.6	0.07	0.1
001	Fluoranthene		Micrograms/L (ug/L)	<0.1		0.3	0.6	0.07	0.1
001	Dibenzo (a,j)acridine		Micrograms/L (ug/L)	<0.1		2.5	10	0.07	0.1
001	Dibenzo (a,h)acridine		Micrograms/L (ug/L)	<0.1		2.5	10	0.07	0.1
001	Di-N-Octyl Phthalate		Micrograms/L (ug/L)	<0.1		0.3	0.6	0.07	0.1
001	Dibenzo(a,h)pyrene		Micrograms/L (ug/L)	<0.1		2.5	10	0.07	0.1
001	Dibenzo(a,h)anthracene		Micrograms/L (ug/L)	<0.1		0.8	1.6	0.07	0.1
001	Dibenzo(a,e)pyrene		Micrograms/L (ug/L)	<0.1		2.5	10	0.07	0.1
001	Hexachlorobutadiene		Micrograms/L (ug/L)	<0.1		0.5	1	0.07	0.1
001	Nitrobenzene		Micrograms/L (ug/L)	<0.1		0.5	1	0.07	0.1
001	Naphthalene		Micrograms/L (ug/L)	<0.1		0.3	0.6	0.07	0.1
001	N-Nitrosodiphenylamine		Micrograms/L (ug/L)	<0.1		0.5	1	0.07	0.1
001	Pyrene		Micrograms/L (ug/L)	<0.1		0.3	0.6	0.07	0.1

001	Phenanthrene		Micrograms/L (ug/L)	<0.1		0.3	0.6	0.07	0.1
001	Perylene		Micrograms/L (ug/L)	<0.1		1.9	7.6	0.07	0.1
001	Indeno(1,2,3-cd)pyrene		Micrograms/L (ug/L)	<0.1		0.5	1	0.07	0.1
001	Hexachloroethane		Micrograms/L (ug/L)	<0.1		0.5	1	0.07	0.1
001	Hexachlorocyclopentadiene (hexachloropentadiene)		Micrograms/L (ug/L)	<0.2		0.5	1	0.14	0.2
001	N-Nitrosodimethylamine		Micrograms/L (ug/L)	<0.1		2	4	0.07	0.1
001	N-Nitrosodi-n-propylamine		Micrograms/L (ug/L)	<0.1		0.5	1	0.07	0.1
001	Isophorone		Micrograms/L (ug/L)	<0.1		0.5	1	0.07	0.1
001	Chrysene		Micrograms/L (ug/L)	<0.1		0.3	0.6	0.07	0.1
001	4-Chlorophenyl-Phenylether		Micrograms/L (ug/L)	<0.1		0.3	0.5	0.07	0.1
001	4-Bromophenyl phenyl ether		Micrograms/L (ug/L)	<0.1		0.2	0.4	0.07	0.1
001	3-Methyl cholanthrene (1,2-dihydro-3-methyl-Benz[j]aceanthrylene)		Micrograms/L (ug/L)	<0.1		2	8	0.07	0.1
001	Anthracene		Micrograms/L (ug/L)	<0.1		0.3	0.6	0.07	0.1
001	Acenaphthylene		Micrograms/L (ug/L)	<0.1		0.3	0.6	0.07	0.1
001	Acenaphthene		Micrograms/L (ug/L)	<0.1		0.2	0.4	0.07	0.1
001	2,4-Dinitrotoluene		Micrograms/L (ug/L)	<0.1		0.2	0.4	0.07	0.1
001	1,2-Diphenylhydrazine		Micrograms/L (ug/L)	<0.1		5	20	0.07	0.1
001	1,2,4-Trichlorobenzene		Micrograms/L (ug/L)	<0.1		0.3	0.6	0.07	0.1
001	3,3'-Dichlorobenzidine		Micrograms/L (ug/L)	<0.1		0.5	1	0.07	0.1
001	2-Chloronaphthalene		Micrograms/L (ug/L)	<0.1		0.3	0.6	0.07	0.1
001	2,6-Dinitrotoluene		Micrograms/L (ug/L)	<0.1		0.2	0.4	0.7	0.1
001	Benzo(j)fluoranthene		Micrograms/L (ug/L)	<0.1		0.5	1	0.7	0.1
001	Bis(2-Chloroethyl)Ether		Micrograms/L (ug/L)	<0.1		0.3	1	0.07	0.1
001	Bis(2-Chloroethoxy)Methane		Micrograms/L (ug/L)	<0.1		5.3	21.2	0.07	0.1
001	Benzo(a)anthracene		Micrograms/L (ug/L)	<0.1		0.3	0.6	0.07	0.1
001	Butyl benzyl phthalate (Benzyl butyl phthalate)		Micrograms/L (ug/L)	<0.1		0.3	0.6	0.07	0.1
001	Bis(2-Ethylhexyl) Phthalate		Micrograms/L (ug/L)	0.2		0.1	0.5	0.07	0.1
001	Bis(2-chloroisopropyl)ether		Micrograms/L (ug/L)	<0.1		5.7	17.1	0.07	0.1
001	Benzo(b)fluoranthene (3,4-Benzofluoranthene)		Micrograms/L (ug/L)	<0.1		0.8	1.6	0.07	0.1
001	Benzo(a)pyrene		Micrograms/L (ug/L)	<0.1		0.5	1	0.07	0.1
001	Benzidine		Micrograms/L (ug/L)	<0.4		12	24	0.28	0.4
001	Benzo(r,s,t)pentaphene (dibenzo(a,i) pyrene)		Micrograms/L (ug/L)	<0.1		0.5	1	0.07	0.1

001	Benzo(k)fluoranthene (11,12-benzofluoranthene)		Micrograms/L (ug/L)	<0.1		0.8	1.6	0.07	0.1
001	Benzo(ghi)perylene		Micrograms/L (ug/L)	<0.1		0.5	1	0.07	0.1
001	Dissolved Oxygen		Milligrams/L (mg/L)	1.6			0.2 mg/L	0.1	0.1
001	Oil & Grease		Milligrams/L (mg/L)	<5				5	2
001	Solids (Residue)	Total Dissolved Solids (TDS)	Milligrams/L (mg/L)	330			20 mg/L	1	1
001	Hardness, Total (As Caco3)	Total	Milligrams/L (mg/L)	170				1	0.01
001	Cyanide	Total	Micrograms/L (ug/L)	<5		5	10	5	0.08
001	Phenolics (Total Phenols)	Total	Micrograms/L (ug/L)	<20			50	20	13.7
001	Nickel	Total	Micrograms/L (ug/L)	1.46		0.1	0.5	0.1	0.006
001	Lead	Total	Micrograms/L (ug/L)	<0.1		0.1	0.5	0.1	0.063
001	Mercury	Total	Nanograms/L (ng/L)	<0.5		0.2 ng/L	0.5 ng/L	0.5	0.2
001	Thallium	Total	Micrograms/L (ug/L)	<0.1		0.09	0.36	0.1	0.013
001	Zinc	Total	Micrograms/L (ug/L)	46.7		0.5	2.5	0.5	0.39
001	Selenium	Total	Micrograms/L (ug/L)	<0.5		1	1	0.5	0.43
001	Silver	Total	Micrograms/L (ug/L)	<0.1		0.04	0.2	0.1	0.04
001	Beryllium	Total	Micrograms/L (ug/L)	<0.1		0.1	0.5	0.1	0.071
001	Cadmium	Total	Micrograms/L (ug/L)	<0.05		0.05	0.25	0.05	0.018
001	Antimony	Total	Micrograms/L (ug/L)	0.43		0.3	1.0	0.3	0.081
001	Arsenic	Total	Micrograms/L (ug/L)	0.687		0.1	0.5	0.1	0.053
001	Copper	Total	Micrograms/L (ug/L)	3.44		0.4	2	0.1	0.013
001	Chromium	Total	Micrograms/L (ug/L)	<0.5		0.2	1	0.5	0.12
001	Chromium, Hexavalent	Dissolved (soluble)	Micrograms/L (ug/L)	<1		0.3	1.2	1	0.25
001	1,1,1-Trichloroethane		Micrograms/L (ug/L)	<1		1	2	1	1
001	1,1,2,2-Tetrachloroethane		Micrograms/L (ug/L)	<1		1.9	2	1	1
001	1,1,2-Trichloroethane		Micrograms/L (ug/L)	<1		1	2	1	1
001	1,1-Dichloroethane		Micrograms/L (ug/L)	<1		1	2	1	1
001	1,1-Dichloroethene (1,1-dichloroethylene)		Micrograms/L (ug/L)	<1		1	2	1	1
001	1,2 Trans-Dichloroethylene OR Trans 1,2 Dichloroethene (Ethylene dichloride)		Micrograms/L (ug/L)	<1		1	2	1	1
001	1,2-Dichlorobenzene		Micrograms/L (ug/L)	<1		1.9	7.6	1	1
001	1,2-Dichloroethane		Micrograms/L (ug/L)	<1		1	2	1	0.86
001	1,2-Dichloropropane		Micrograms/L (ug/L)	<1		1	2	1	1
001	1,3-Dichlorobenzene		Micrograms/L (ug/L)	<1		1.9	7.6	1	1

001	1,3-Dichloropropene (1,3 Dichloropropylene)		Micrograms/L (ug/L)	<1		1	2	1	1
001	1,4-Dichlorobenzene		Micrograms/L (ug/L)	<1		4.4	17.6	1	1
001	2-Chloroethylvinylether		Micrograms/L (ug/L)	<1		1	2	1	1
001	Acrolein		Micrograms/L (ug/L)	<1		5	10	1	1
001	Acrylonitrile		Micrograms/L (ug/L)	<1		1	2	1	1
001	Benzene		Micrograms/L (ug/L)	<1		1	2	1	1
001	Bromoform		Micrograms/L (ug/L)	<1		1	2	1	1
001	Bromomethane (methyl bromide)		Micrograms/L (ug/L)	<1		5	10	1	1
001	Carbon Tetrachloride		Micrograms/L (ug/L)	<1		1	2	1	1
001	Chlorobenzene		Micrograms/L (ug/L)	<1		1	2	1	1
001	Chloroethane		Micrograms/L (ug/L)	<1		1	2	1	1
001	Chloroform		Micrograms/L (ug/L)	<1		1	2	1	1
001	Chloromethane (methyl chloride)		Micrograms/L (ug/L)	<1		1	2	1	0.88
001	Dibromochloromethane (chlorodibromomethane)		Micrograms/L (ug/L)	<1		1	2	1	1
001	Dichlorobromomethane		Micrograms/L (ug/L)	<1		1	2	1	1
001	Ethylbenzene		Micrograms/L (ug/L)	<1		1	2	1	1
001	Methylene Chloride		Micrograms/L (ug/L)	<2		5	10	2	2
001	Tetrachloroethene (tetrachloroethylene)		Micrograms/L (ug/L)	<1		1	2	1	0.98
001	Toluene		Micrograms/L (ug/L)	<2		1	2	2	1
001	Trichloroethene (Trichloroethylene)		Micrograms/L (ug/L)	<1		1	2	1	1
001	Vinyl Chloride		Micrograms/L (ug/L)	<1		1	2	1	1

Reporting Codes Used: B - Below Detection Limit/No Detection

I certify under penalty of law, that this document and all attachments were prepared under my direction or supervision in accordance with a system designed to assure that qualified personnel properly gather and evaluate the information submitted. Based on my inquiry of the person or persons who manage the system or those persons directly responsible for gathering information, the information submitted is, to the best of my knowledge and belief, true, accurate, and complete. I am aware that there are significant penalties for submitting false information, including the possibility of fine and imprisonment for knowing violations.

Donovan Sheppard
Signature

1/6/2022 11:17:04 AM
Date

Washington State Department of Ecology **Discharge Monitoring Report (DMR)**

Permit Number: WA0020486 **Permittee:** MONROE STP

Facility County: Snohomish **Receiving Waterbody:**

Monitoring Period: 09/01/2021 - 09/30/2021 **Outfall:** 001 **Version:** 1

Week	Monitoring Point	Total BOD5 Total Milligrams/L (mg/L) 3/Week Composite sample (24 hour)	BOD5 Calculated Calculated Lbs/Day 3/Week Calculated	Solids (Residue) Total suspended (TSS) Milligrams/L (mg/L) 3/Week Composite sample (24 hour)	Solids (Residue) Total suspended (TSS) Lbs/Day 3/Week Calculated	Flow Million Gallons/Day Continuous Metered/Recorded	Total BOD5 Total Milligrams/L (mg/L) 3/Week Composite sample (24 hour)	BOD5 Calculated Calculated Lbs/Day 3/Week Calculated	Total BOD5 Total Percent Monthly Calculated	Solids (Residue) Total suspended (TSS) Milligrams/L (mg/L) 3/Week Composite sample (24 hour)	Solids (Residue) Total suspended (TSS) Lbs/Day 3/Week Calculated	Solids (Residue) Total suspended (TSS) Percent Monthly Calculated
		IN1	IN1	IN1	IN1	001	001	001	001	001	001	001
1-W	**9/1/21**	308	4105	142	1892	1.428	5	67	98	5	67	96
1-Th	**9/2/21**	338	3921	364	4223	1.598	5	58	99	4	46	99
1-F	**9/3/21**					1.391						
1-Sa	**9/4/21**					1.393						
2-Su	**9/5/21**					1.314						
2-M	**9/6/21**	307	3585	222	2592	1.346	7	82	98	7	82	97
2-T	**9/7/21**	285	3525	192	2375	1.400	7	87	98	6	74	97
2-W	**9/8/21**	293	3404	224	2602	1.483	6	70	98	6	70	97
2-Th	**9/9/21**					1.393						
2-F	**9/10/21**					1.437						
2-Sa	**9/11/21**					1.379						
3-Su	**9/12/21**					1.318						
3-M	**9/13/21**	273	3274	228	2734	1.308	4	48	99	10	120	96
3-T	**9/14/21**	298	3544	248	2949	1.438	1	8	100	6	71	98
3-W	**9/15/21**	293	3336	206	2345	1.426	6	68	98	4	46	98
3-Th	**9/16/21**					1.365						
3-F	**9/17/21**					1.576						
3-Sa	**9/18/21**					1.759						
4-Su	**9/19/21**					1.571						
4-M	**9/20/21**	252	3424	176	2391	1.694	3	41	99	2	27	99
4-T	**9/21/21**	296	3362	212	2408	1.629	2	23	99	2	23	99
4-W	**9/22/21**	241	3061	210	2667	1.362	5	64	98	5	64	98
4-Th	**9/23/21**					1.523						
4-F	**9/24/21**					1.318						
4-Sa	**9/25/21**					1.399						
5-Su	**9/26/21**					1.301						
5-M	**9/27/21**	203	2851	92	1292	1.595	5	70	98	7	98	92
5-T	**9/28/21**	245	2969	142	1721	1.684	4	48	98	3	36	98
5-W	**9/29/21**	318	4015	218	2753	1.453	6	76	98	6	76	97
5-Th	**9/30/21**					1.514						
Daily Minimum												
Average		282	3455	205	2496	1.460	5	58	98	5	64	97
		Report Only	DL: 6090	Report Only	DL: 5940	DL: 2.84	<= 30	<= 711	>= 85	<= 30	<= 711	>= 85
Weekly Average							7	79		7	79	
							<= 45	<= 1066		<= 45	<= 1066	
Maximum		338	4105	364	4223	1.972						
		Report Only	Report Only	Report Only	Report Only	Report Only						
Daily Maximum												
Monthly geometric mean												
Weekly Geometric Mean												

Week	Monitoring Point	Fecal Coliform #/100ml 3/Week Grab	pH Standard Units 1/Day Grab	Temperature Measured Degrees C Continuous Measurement	Temperature (7-DAD Max) Calculated Degrees C 1/Day Calculated
		001	001	001	001
1-W	**9/1/21**	3	7.1	22.3	22.6
1-Th	**9/2/21**	3	7.1	22.1	22.4
1-F	**9/3/21**		7.2	22.1	22.4
1-Sa	**9/4/21**		7.0	22.1	22.3
2-Su	**9/5/21**		7.0	22.3	22.2
2-M	**9/6/21**		7.0	22.5	22.2
2-T	**9/7/21**	2	7.0	22.7	22.3
2-W	**9/8/21**	3	7.0	23.0	22.4
2-Th	**9/9/21**	3	6.9	22.9	22.5
2-F	**9/10/21**		6.9	22.7	22.6
2-Sa	**9/11/21**		6.9	22.8	22.7
3-Su	**9/12/21**		6.8	22.3	22.7
3-M	**9/13/21**		6.8	22.3	22.7
3-T	**9/14/21**	3	6.9	22.0	22.6
3-W	**9/15/21**	4	6.9	22.0	22.4
3-Th	**9/16/21**	2	7.2	21.9	22.3
3-F	**9/17/21**		7.3	21.4	22.1
3-Sa	**9/18/21**		7.4	20.6	21.8
4-Su	**9/19/21**		7.1	20.7	21.5
4-M	**9/20/21**	4	6.9	21.1	21.4
4-T	**9/21/21**	2	7.3	21.4	21.3
4-W	**9/22/21**	3	7.1	21.5	21.2
4-Th	**9/23/21**		7.2	21.6	21.2
4-F	**9/24/21**		6.8	21.7	21.2
4-Sa	**9/25/21**		6.8	21.4	21.3
5-Su	**9/26/21**		7.3	21.3	21.4
5-M	**9/27/21**	3	6.9	20.8	21.4
5-T	**9/28/21**	3	6.7	20.8	21.3
5-W	**9/29/21**	2	6.6	20.6	21.2
5-Th	**9/30/21**		6.8	20.7	21.0
Daily Minimum			6.6		
			>= 6.0 (RO)		
Average					
Weekly Average					
Maximum					22.7
					Report Only
Daily Maximum			7.4	23.0	
			<= 9.0 (RO)	Report Only	
Monthly geometric mean		3			
		<= 100			
Weekly Geometric Mean		3			
		<= 200			

I certify under penalty of law, that this document and all attachments were prepared under my direction or supervision in accordance with a system designed to assure that qualified personnel properly gather and evaluate the information submitted. Based on my inquiry of the person or persons who manage the system or those persons directly responsible for gathering information, the information submitted is, to the best of my knowledge and belief, true, accurate, and complete. I am aware that there are significant penalties for submitting false information, including the possibility of fine and imprisonment for knowing violations.

Donovan Sheppard

Signature

10/15/2021 7:28:11 AM

Date

Washington State Department of Ecology **Discharge Monitoring Report (DMR)**

Permit Number: WA0020486 **Permittee:** MONROE STP

Facility County: Snohomish **Receiving Waterbody:**

Monitoring Period: 10/01/2021 - 10/31/2021 **Outfall:** 001 **Version:** 1

Week	Monitoring Point	Total BOD5 Total Milligrams/L (mg/L) 3/Week Composite sample (24 hour)	BOD5 Calculated Calculated Lbs/Day 3/Week Calculated	Solids (Residue) Total suspended (TSS) Milligrams/L (mg/L) 3/Week Composite sample (24 hour)	Solids (Residue) Total suspended (TSS) Lbs/Day 3/Week Calculated	Flow Million Gallons/Day Continuous Metered/Recorded	Total BOD5 Total Milligrams/L (mg/L) 3/Week Composite sample (24 hour)	BOD5 Calculated Calculated Lbs/Day 3/Week Calculated	Total BOD5 Total Percent Monthly Calculated	Solids (Residue) Total suspended (TSS) Milligrams/L (mg/L) 3/Week Composite sample (24 hour)	Solids (Residue) Total suspended (TSS) Lbs/Day 3/Week Calculated	Solids (Residue) Total suspended (TSS) Percent Monthly Calculated
		IN1	IN1	IN1	IN1	001	001	001	001	001	001	001
1-F	**10/1/21**					1.972						
1-Sa	**10/2/21**					1.497						
2-Su	**10/3/21**					1.357						
2-M	**10/4/21**	304	3783	178	2215	1.457	1	12	100	11	137	94
2-T	**10/5/21**	273	3622	164	2176	1.492	1	13	100	10	133	94
2-W	**10/6/21**	301	3429	254	2894	1.591	4	46	99	9	103	96
2-Th	**10/7/21**					1.366						
2-F	**10/8/21**					1.427						
2-Sa	**10/9/21**					1.388						
3-Su	**10/10/21**					1.371						
3-M	**10/11/21**	159	1976	156	1939	1.496	5	62	97	8	99	95
3-T	**10/12/21**	225	2882	140	1793	1.490	5	64	98	3	38	98
3-W	**10/13/21**	174	2140	64	787	1.536	6	74	97	4	49	94
3-Th	**10/14/21**					1.475						
3-F	**10/15/21**					1.458						
3-Sa	**10/16/21**					1.553						
4-Su	**10/17/21**					1.312						
4-M	**10/18/21**	243	3026	152	1893	1.373	6	75	98	4	50	97
4-T	**10/19/21**	265	3267	208	2564	1.493	5	62	98	4	49	98
4-W	**10/20/21**	226	2761	150	1833	1.478	4	49	98	3	37	98
4-Th	**10/21/21**					1.465						
4-F	**10/22/21**					1.518						
4-Sa	**10/23/21**					1.581						
5-Su	**10/24/21**					1.298						
5-M	**10/25/21**	235	3036	254	3281	1.620	3	39	99	4	52	98
5-T	**10/26/21**	249	3152	268	3393	1.549	4	51	98	3	38	99
5-W	**10/27/21**	285	3580	264	3316	1.518	4	50	99	3	38	99
5-Th	**10/28/21**					1.506						
5-F	**10/29/21**					2.651						
5-Sa	**10/30/21**					1.980						
6-Su	**10/31/21**					1.720						
Daily Minimum												
Average		245	3055	188	2340	1.542	4	50	98	6	69	97
		Report Only	DL: 6090	Report Only	DL: 5940	DL: 2.84	<= 30	<= 711	>= 85	<= 30	<= 711	>= 85
Weekly Average							5	66		10	124	
							<= 45	<= 1066		<= 45	<= 1066	
Maximum		304	3783	268	3393	2.651						
		Report Only	Report Only	Report Only	Report Only	Report Only						
Daily Maximum												
Monthly geometric mean												
Weekly Geometric Mean												

Week	Monitoring Point	Fecal Coliform #/100ml 3/Week Grab	pH Standard Units 1/Day Grab	Temperature Measured Degrees C Continuous Measurement	Temperature (7-DAD Max) Calculated Degrees C 1/Day Calculated
		001	001	001	001
1-F	**10/1/21**		6.9	20.0	20.8
1-Sa	**10/2/21**		7.3	20.3	20.6
2-Su	**10/3/21**		7.3	20.3	20.5
2-M	**10/4/21**	8	7.5	20.7	20.5
2-T	**10/5/21**	3	7.2	20.6	20.5
2-W	**10/6/21**	5	7.0	19.8	20.4
2-Th	**10/7/21**		6.9	19.9	20.2
2-F	**10/8/21**		6.9	19.8	20.2
2-Sa	**10/9/21**		7.0	19.6	20.1
3-Su	**10/10/21**		7.1	19.5	20.0
3-M	**10/11/21**		7.1	19.2	19.8
3-T	**10/12/21**	2	7.1	19.2	19.6
3-W	**10/13/21**	1	7.2	19.0	19.5
3-Th	**10/14/21**	1	7.2	18.6	19.3
3-F	**10/15/21**		7.2	18.9	19.1
3-Sa	**10/16/21**		7.2	18.9	19.0
4-Su	**10/17/21**		6.9	18.7	18.9
4-M	**10/18/21**	2	6.7	18.9	118.9
4-T	**10/19/21**	1	6.8	19.2	18.9
4-W	**10/20/21**	1	7.2	19.1	18.9
4-Th	**10/21/21**		7.4	18.7	18.9
4-F	**10/22/21**		7.3	18.7	18.9
4-Sa	**10/23/21**		7.3	18.7	18.8
5-Su	**10/24/21**		7.3	18.7	18.9
5-M	**10/25/21**	1	7.7	18.3	18.8
5-T	**10/26/21**	1	7.2	18.4	18.7
5-W	**10/27/21**	1	7.2	18.3	18.5
5-Th	**10/28/21**		7.2	18.2	18.5
5-F	**10/29/21**		7.0	17.3	18.3
5-Sa	**10/30/21**		6.9	16.9	18.0
6-Su	**10/31/21**		7.0	16.9	17.8
Daily Minimum			6.7		
			>= 6.0 (RO)		
Average					
Weekly Average					
Maximum					20.8
					Report Only
Daily Maximum			7.7	20.7	
			<= 9.0 (RO)	Report Only	
Monthly geometric mean		2			
		<= 100			
Weekly Geometric Mean		5			
		<= 200			

I certify under penalty of law, that this document and all attachments were prepared under my direction or supervision in accordance with a system designed to assure that qualified personnel properly gather and evaluate the information submitted. Based on my inquiry of the person or persons who manage the system or those persons directly responsible for gathering information, the information submitted is, to the best of my knowledge and belief, true, accurate, and complete. I am aware that there are significant penalties for submitting false information, including the possibility of fine and imprisonment for knowing violations.

Donovan Sheppard	11/15/2021 6:08:59 AM
Signature	**Date**

Washington State Department of Ecology **Discharge Monitoring Report (DMR)**

Permit Number: WA0020486 **Permittee:** MONROE STP

Facility County: Snohomish **Receiving Waterbody:**

Monitoring Period: 11/01/2021 - 11/30/2021 **Outfall:** 001 **Version:** 1

Week	Monitoring Point	Total BOD5 Total Milligrams/L (mg/L) 3/Week Composite sample (24 hour)	BOD5 Calculated Calculated Lbs/Day 3/Week Calculated	Solids (Residue) Total suspended (TSS) Milligrams/L (mg/L) 3/Week Composite sample (24 hour)	Solids (Residue) Total suspended (TSS) Lbs/Day 3/Week Calculated	Flow Million Gallons/Day Continuous Metered/Recorded	Total BOD5 Total Milligrams/L (mg/L) 3/Week Composite sample (24 hour)	BOD5 Calculated Calculated Lbs/Day 3/Week Calculated	Total BOD5 Total Percent Monthly Calculated	Solids (Residue) Total suspended (TSS) Milligrams/L (mg/L) 3/Week Composite sample (24 hour)	Solids (Residue) Total suspended (TSS) Lbs/Day 3/Week Calculated	Solids (Residue) Total suspended (TSS) Percent Monthly Calculated
		IN1	IN1	IN1	IN1	001	001	001	001	001	001	001
1-M	**11/1/21**	180	2548	182	2576	1.630	4	57	98	3	42	98
1-T	**11/2/21**	280	3634	300	3893	1.697	3	39	99	2	26	99
1-W	**11/3/21**	143	2118	158	2340	1.556	3	44	98	3	44	98
1-Th	**11/4/21**					1.776						
1-F	**11/5/21**					1.930						
1-Sa	**11/6/21**					1.824						
2-Su	**11/7/21**					1.885						
2-M	**11/8/21**	160	2318	252	3651	1.676	3	43	98	4	58	98
2-T	**11/9/21**	205	3028	206	3043	1.737	2	30	99	4	59	98
2-W	**11/10/21**	136	1862	194	2657	1.771	4	55	97	4	55	98
2-Th	**11/11/21**					1.642						
2-F	**11/12/21**					1.991						
2-Sa	**11/13/21**					2.712						
3-Su	**11/14/21**					2.011						
3-M	**11/15/21**	277	5630	202	4106	2.171	4	81	99	3	61	99
3-T	**11/16/21**	327	5113	138	2158	2.437	3	47	99	2	31	99
3-W	**11/17/21**	178	3273	122	2244	1.875	4	74	98	2	37	98
3-Th	**11/18/21**					2.205						
3-F	**11/19/21**					2.037						
3-Sa	**11/20/21**					2.055						
4-Su	**11/21/21**					1.791						
4-M	**11/22/21**	240	3349	232	3237	1.673	5	70	98	4	56	98
4-T	**11/23/21**	226	2859	264	3340	1.517	4	51	98	4	51	98
4-W	**11/24/21**	232	4630	262	5339	2.393	4	80	98	4	80	98
4-Th	**11/25/21**					2.041						
4-F	**11/26/21**					2.141						
4-Sa	**11/27/21**					2.122						
5-Su	**11/28/21**					2.162						
5-M	**11/29/21**	218	3602	194	3205	2.166	5	83	98	6	99	97
5-T	**11/30/21**	228	3841	192	3235	1.981	5	84	98	6	99	97
Daily Minimum												
Average		216	3415	207	3208	1.954	4	60	98	4	57	98
		Report Only	DL: 6090	Report Only	DL: 5940	DL: 2.84	<= 30	<= 711	>= 85	<= 30	<= 711	>= 85
Weekly Average							4	67		4	62	
							<= 45	<= 1066		<= 45	<= 1066	
Maximum		327	5630	300	5229	2.712						
		Report Only	Report Only	Report Only	Report Only	Report Only						
Daily Maximum												
Monthly geometric mean												
Weekly Geometric Mean												

Week	Monitoring Point	Fecal Coliform #/100ml 3/Week Grab	pH Standard Units 1/Day Grab	Temperature Measured Degrees C Continuous Measurement	Temperature (7-DAD Max) Calculated Degrees C 1/Day Calculated
		001	001	001	001
1-M	**11/1/21**	1	7.0	16.8	17.5
1-T	**11/2/21**	1	7.0	17.1	17.5
1-W	**11/3/21**	2	7.2	17.1	17.3
1-Th	**11/4/21**		7.1	17.1	17.1
1-F	**11/5/21**		7.0	16.6	16.8
1-Sa	**11/6/21**		6.9	16.6	16.8
2-Su	**11/7/21**		7.1	16.3	16.8
2-M	**11/8/21**	1	7.2	16.3	16.7
2-T	**11/9/21**	1	7.2	16.5	16.6
2-W	**11/10/21**	1	7.2	16.4	16.5
2-Th	**11/11/21**		7.0	16.4	16.4
2-F	**11/12/21**		7.1	16.2	16.4
2-Sa	**11/13/21**		7.1	15.8	16.3
3-Su	**11/14/21**		7.1	16.4	16.3
3-M	**11/15/21**	1	7.3	16.5	16.3
3-T	**11/16/21**	1	7.1	16.1	16.2
3-W	**11/17/21**	1	7.1	15.8	16.2
3-Th	**11/18/21**		7.3	15.7	16.1
3-F	**11/19/21**		7.2	15.6	16.0
3-Sa	**11/20/21**		7.1	15.5	15.9
4-Su	**11/21/21**		7.0	15.9	15.9
4-M	**11/22/21**	1	7.1	15.9	15.8
4-T	**11/23/21**	1	7.3	15.4	15.7
4-W	**11/24/21**	2	7.1	15.0	15.6
4-Th	**11/25/21**		6.7	15.4	15.5
4-F	**11/26/21**		6.9	15.1	15.5
4-Sa	**11/27/21**		6.5	14.8	15.4
5-Su	**11/28/21**		6.4	15.3	15.3
5-M	**11/29/21**	1	6.5	15.8	15.3
5-T	**11/30/21**	1	6.7	16.1	15.3
Daily Minimum			6.4		
			>= 6.0 (RO)		
Average					
Weekly Average					
Maximum					17.5
					Report Only
Daily Maximum			7.3	17.1	
			<= 9.0 (RO)	Report Only	
Monthly geometric mean		1			
		<= 100			
Weekly Geometric Mean		2			
		<= 200			

I certify under penalty of law, that this document and all attachments were prepared under my direction or supervision in accordance with a system designed to assure that qualified personnel properly gather and evaluate the information submitted. Based on my inquiry of the person or persons who manage the system or those persons directly responsible for gathering information, the information submitted is, to the best of my knowledge and belief, true, accurate, and complete. I am aware that there are significant penalties for submitting false information, including the possibility of fine and imprisonment for knowing violations.

Donovan Sheppard	12/14/2021 2:36:45 PM
Signature	**Date**

Washington State Department of Ecology **Discharge Monitoring Report (DMR)**

Permit Number: WA0020486 **Permittee:** MONROE STP

Facility County: Snohomish **Receiving Waterbody:**

Monitoring Period: 12/01/2021 - 12/31/2021 **Outfall:** 001 **Version:** 1

Week	Monitoring Point	Total BOD5 Total Milligrams/L (mg/L) 3/Week Composite sample (24 hour)	BOD5 Calculated Calculated Lbs/Day 3/Week Calculated	Solids (Residue) Total suspended (TSS) Milligrams/L (mg/L) 3/Week Composite sample (24 hour)	Solids (Residue) Total suspended (TSS) Lbs/Day 3/Week Calculated	Flow Million Gallons/Day Continuous Metered/Recorded	Total BOD5 Total Milligrams/L (mg/L) 3/Week Composite sample (24 hour)	BOD5 Calculated Calculated Lbs/Day 3/Week Calculated	Total BOD5 Total Percent Monthly Calculated	Solids (Residue) Total suspended (TSS) Milligrams/L (mg/L) 3/Week Composite sample (24 hour)	Solids (Residue) Total suspended (TSS) Lbs/Day 3/Week Calculated	Solids (Residue) Total suspended (TSS) Percent Monthly Calculated
		IN1	IN1	IN1	IN1	001	001	001	001	001	001	001
1-W	**12/1/21**	161	2657	94	1551	2.020	4	66	98	5	74	95
1-Th	**12/2/21**					1.979						
1-F	**12/3/21**					1.857						
1-Sa	**12/4/21**					1.767						
2-Su	**12/5/21**					1.984						
2-M	**12/6/21**	211	3490	162	2679	1.666	7	116	97	4	66	98
2-T	**12/7/21**	220	3121	140	1986	1.983	5	71	98	4	57	97
2-W	**12/8/21**	162	2858	104	1834	1.701	5	88	97	4	71	96
2-Th	**12/9/21**					2.115						
2-F	**12/10/21**					1.796						
2-Sa	**12/11/21**					2.057						
3-Su	**12/12/21**					1.893						
3-M	**12/13/21**	177	2724	162	2493	1.899	7	108	96	4	62	98
3-T	**12/14/21**	165	2353	110	1569	1.845	4	57	98	5	71	95
3-W	**12/15/21**	129	1830	132	1873	1.710	5	71	96	4	57	97
3-Th	**12/16/21**					1.701						
3-F	**12/17/21**					1.750						
3-Sa	**12/18/21**					1.752						
4-Su	**12/19/21**					2.681						
4-M	**12/20/21**	156	2598	144	2398	2.059	7	117	96	6	100	96
4-T	**12/21/21**	312	4658	274	4090	1.997	6	90	98	5	75	98
4-W	**12/22/21**	204	3723	204	3723	1.790	10	182	95	6	100	97
4-Th	**12/23/21**					2.188						
4-F	**12/24/21**					2.015						
4-Sa	**12/25/21**					2.137						
5-Su	**12/26/21**					1.971						
5-M	**12/27/21**	227	3449	182	2766	1.881	10	152	96	6	91	97
5-T	**12/28/21**	228	3497	168	2577	1.822	5	77	98	3	46	98
5-W	**12/29/21**	197	3020	240	3679	1.839	7	107	96	5	77	98
5-Th	**12/30/21**					1.838						
5-F	**12/31/21**					1.753						
Daily Minimum												
Average		196	3075	163	2555	1.923	6	100	97	5	73	97
		Report Only	DL: 6090	Report Only	DL: 5940	DL: 2.84	<= 30	<= 711	>= 85	<= 30	<= 711	>= 85
Weekly Average							8	130		6	92	
							<= 45	<= 1066		<= 45	<= 1066	
Maximum		312	4658	274	4090	2.681						
		Report Only	Report Only	Report Only	Report Only	Report Only						
Daily Maximum												
Monthly geometric mean												
Weekly Geometric Mean												

Week	Monitoring Point	Fecal Coliform #/100ml 3/Week Grab	pH Standard Units 1/Day Grab	Temperature Measured Degrees C Continuous Measurement	Temperature (7-DAD Max) Calculated Degrees C 1/Day Calculated
		001	001	001	001
1-W	**12/1/21**	1	6.9	16.1	15.5
1-Th	**12/2/21**		6.8	16.1	15.6
1-F	**12/3/21**		6.5	16.0	15.7
1-Sa	**12/4/21**		7.5	15.7	15.9
2-Su	**12/5/21**		7.1	15.0	15.8
2-M	**12/6/21**	1	6.8	15.1	15.7
2-T	**12/7/21**	1	7.8	15.1	15.6
2-W	**12/8/21**	1	7.2	15.2	15.5
2-Th	**12/9/21**		7.5	14.7	15.3
2-F	**12/10/21**		7.8	14.7	15.1
2-Sa	**12/11/21**		7.0	14.5	14.9
3-Su	**12/12/21**		6.9	14.4	14.8
3-M	**12/13/21**	1	6.6	14.6	14.7
3-T	**12/14/21**	1	6.5	14.5	14.7
3-W	**12/15/21**	1	6.6	14.3	14.5
3-Th	**12/16/21**		6.7	14.4	14.5
3-F	**12/17/21**		6.7	14.5	14.5
3-Sa	**12/18/21**		6.5	14.4	14.4
4-Su	**12/19/21**		6.7	13.0	14.2
4-M	**12/20/21**	1	6.7	13.4	14.1
4-T	**12/21/21**	1	6.6	13.9	14.0
4-W	**12/22/21**	1	6.5	14.0	13.9
4-Th	**12/23/21**		6.5	13.5	13.8
4-F	**12/24/21**		6.6	14.0	13.7
4-Sa	**12/25/21**		6.6	13.9	13.7
5-Su	**12/26/21**		6.6	12.6	13.6
5-M	**12/27/21**	1	6.9	13.0	13.6
5-T	**12/28/21**	1	6.5	13.0	13.4
5-W	**12/29/21**	1	6.9	12.8	13.3
5-Th	**12/30/21**		7.0	12.6	13.1
5-F	**12/31/21**		6.5	12.4	12.9
Daily Minimum			6.5		
			>= 6.0 (RO)		
Average					
Weekly Average					
Maximum					15.9
					Report Only
Daily Maximum			7.8	16.1	
			<= 9.0 (RO)	Report Only	
Monthly geometric mean		1			
		<= 100			
Weekly Geometric Mean		1			
		<= 200			

I certify under penalty of law, that this document and all attachments were prepared under my direction or supervision in accordance with a system designed to assure that qualified personnel properly gather and evaluate the information submitted. Based on my inquiry of the person or persons who manage the system or those persons directly responsible for gathering information, the information submitted is, to the best of my knowledge and belief, true, accurate, and complete. I am aware that there are significant penalties for submitting false information, including the possibility of fine and imprisonment for knowing violations.

Donovan Sheppard

Signature

1/14/2022 10:08:19 AM

Date

Washington State Department of Ecology **Discharge Monitoring Report (DMR)**

Permit Number: WA0020486 **Permittee:** MONROE STP

Facility County: Snohomish **Receiving Waterbody:**

Monitoring Period: 01/01/2022 - 01/31/2022 **Outfall:** 001 **Version:** 1

Week	Monitoring Point	Total BOD5 Total Milligrams/L (mg/L) 3/Week Composite sample (24 hour)	BOD5 Calculated Calculated Lbs/Day 3/Week Calculated	Solids (Residue) Total suspended (TSS) Milligrams/L (mg/L) 3/Week Composite sample (24 hour)	Solids (Residue) Total suspended (TSS) Lbs/Day 3/Week Calculated	Flow Million Gallons/Day Continuous Metered/Recorded	Total BOD5 Total Milligrams/L (mg/L) 3/Week Composite sample (24 hour)	BOD5 Calculated Calculated Lbs/Day 3/Week Calculated	Total BOD5 Total Percent Monthly Calculated	Solids (Residue) Total suspended (TSS) Milligrams/L (mg/L) 3/Week Composite sample (24 hour)	Solids (Residue) Total suspended (TSS) Lbs/Day 3/Week Calculated	Solids (Residue) Total suspended (TSS) Percent Monthly Calculated
		IN1	IN1	IN1	IN1	001	001	001	001	001	001	001
1-Sa	**1/1/22**					1.763						
2-Su	**1/2/22**					1.633						
2-M	**1/3/22**	180	3409	216	4091	2.133	10	189	94	7	133	97
2-T	**1/4/22**	184	3464	274	5158	2.271	6	113	97	7	132	97
2-W	**1/5/22**	173	3533	174	3554	2.257	7	143	96	6	112	97
2-Th	**1/6/22**					2.449						
2-F	**1/7/22**					3.383						
2-Sa	**1/8/22**					3.021						
3-Su	**1/9/22**					2.427						
3-M	**1/10/22**					2.262						
3-T	**1/11/22**	219	4639	170	3601	2.380	12	254	95	15	318	91
3-W	**1/12/22**	215	4592	158	3375	2.540	5	107	98	4	85	97
3-Th	**1/13/22**	222	4225	218	4149	2.561	9	171	96	13	247	94
3-F	**1/14/22**					2.282						
3-Sa	**1/15/22**					2.228						
4-Su	**1/16/22**					2.100						
4-M	**1/17/22**	241	4153	164	2826	2.066	6	103	98	2	34	99
4-T	**1/18/22**	206	3524	192	3284	2.066	4	68	98	2	34	99
4-W	**1/19/22**	201	3460	168	2892	2.051	3	52	99	3	52	98
4-Th	**1/20/22**					2.064						
4-F	**1/21/22**					2.352						
4-Sa	**1/22/22**					2.067						
5-Su	**1/23/22**					1.974						
5-M	**1/24/22**	173	2881	184	3065	1.949	6	100	97	6	100	97
5-T	**1/25/22**	180	2981	174	2824	1.997	3	49	98	4	65	98
5-W	**1/26/22**	323	5029	220	3426	1.946	4	62	99	3	47	99
5-Th	**1/27/22**					1.867						
5-F	**1/28/22**					1.815						
5-Sa	**1/29/22**					1.862						
6-Su	**1/30/22**					1.780						
6-M	**1/31/22**	184	3154	238	4079	2.460	6	103	97	3	51	99
Daily Minimum												
Average		208	3768	196	3563	2.185	6	117	97	6	109	97
		Report Only	DL: 6090	Report Only	DL: 5940	DL: 2.84	<= 30	<= 711	>= 85	<= 30	<= 711	>= 85
Weekly Average							9	177		11	216	
							<= 45	<= 1066		<= 45	<= 1066	
Maximum		323	5029	274	5158	3.383						
		Report Only	Report Only	Report Only	Report Only	Report Only						
Daily Maximum												
Monthly geometric mean												
Weekly Geometric Mean												

Week	Monitoring Point	Fecal Coliform #/100ml 3/Week Grab	pH Standard Units 1/Day Grab	Temperature Measured Degrees C Continuous Measurement	Temperature (7-DAD Max) Calculated Degrees C 1/Day Calculated
		001	001	001	001
1-Sa	**1/1/22**		6.5	12.3	12.8
2-Su	**1/2/22**		6.3	12.1	12.6
2-M	**1/3/22**	1	6.3	12.0	12.5
2-T	**1/4/22**	4	6.5	11.8	12.3
2-W	**1/5/22**	1	7.5	12.2	12.2
2-Th	**1/6/22**		7.4	12.2	12.1
2-F	**1/7/22**		7.1	11.5	12.0
2-Sa	**1/8/22**		6.7	11.9	11.9
3-Su	**1/9/22**		6.6	12.1	12.0
3-M	**1/10/22**	2	6.7	12.5	12.0
3-T	**1/11/22**	1	6.6	12.6	12.1
3-W	**1/12/22**	1	6.5	12.8	12.2
3-Th	**1/13/22**		6.6	12.8	12.3
3-F	**1/14/22**		6.6	12.9	12.5
3-Sa	**1/15/22**		6.8	12.9	12.7
4-Su	**1/16/22**		6.6	12.9	12.8
4-M	**1/17/22**		6.6	12.9	12.8
4-T	**1/18/22**	1	6.6	13.4	12.9
4-W	**1/19/22**	1	6.6	13.4	13.0
4-Th	**1/20/22**	1	7.0	13.5	13.1
4-F	**1/21/22**		7.3	13.3	13.2
4-Sa	**1/22/22**		6.6	13.3	13.3
5-Su	**1/23/22**		6.5	13.1	13.3
5-M	**1/24/22**	1	6.5	13.1	13.3
5-T	**1/25/22**	1	6.4	13.1	13.3
5-W	**1/26/22**	1	7.0	12.9	13.2
5-Th	**1/27/22**		7.0	12.7	13.1
5-F	**1/28/22**		7.0	12.8	13.0
5-Sa	**1/29/22**		6.5	12.8	12.9
6-Su	**1/30/22**		6.8	12.6	12.8
6-M	**1/31/22**	1	7.0	12.4	12.7
Daily Minimum			6.3		
			>= 6.0 (RO)		
Average					
Weekly Average					
Maximum					13.3
					Report Only
Daily Maximum			7.5	13.5	
			<= 9.0 (RO)	Report Only	
Monthly geometric mean		1			
		<= 100			
Weekly Geometric Mean		2			
		<= 200			

I certify under penalty of law, that this document and all attachments were prepared under my direction or supervision in accordance with a system designed to assure that qualified personnel properly gather and evaluate the information submitted. Based on my inquiry of the person or persons who manage the system or those persons directly responsible for gathering information, the information submitted is, to the best of my knowledge and belief, true, accurate, and complete. I am aware that there are significant penalties for submitting false information, including the possibility of fine and imprisonment for knowing violations.

Donovan Sheppard	2/14/2022 8:00:18 AM
Signature	**Date**

Washington State Department of Ecology **Discharge Monitoring Report (DMR)**

Permit Number: WA0020486 **Permittee:** MONROE STP

Facility County: Snohomish **Receiving Waterbody:**

Monitoring Period: 01/01/2022 - 03/31/2022 **Outfall:** 001 **Version:** 1

Week	Monitoring Point	Phosphorus Total Milligrams/L (mg/L) Quarterly Composite sample (24 hour)	Total Reactive Phosphorus Total Reactive Milligrams/L (mg/L) Quarterly Composite sample (24 hour)	Ammonia Total Milligrams/L (mg/L) Quarterly Composite sample (24 hour)	Nitrate + Nitrite Total Milligrams/L (mg/L) Quarterly Composite sample (24 hour)	TKN Total Milligrams/L (mg/L) Quarterly Composite sample (24 hour)
		001	001	001	001	001
5-T	**1/25/22**	2.73	2.5	0.360	10	3.01
Average		2.73	2.5	0.360	10	3.01
		Report Only	Report Only	Report Only	Report Only	Report Only

I certify under penalty of law, that this document and all attachments were prepared under my direction or supervision in accordance with a system designed to assure that qualified personnel properly gather and evaluate the information submitted. Based on my inquiry of the person or persons who manage the system or those persons directly responsible for gathering information, the information submitted is, to the best of my knowledge and belief, true, accurate, and complete. I am aware that there are significant penalties for submitting false information, including the possibility of fine and imprisonment for knowing violations.

Donovan Sheppard
Signature

4/4/2022 8:01:56 AM
Date

Washington State Department of Ecology **Discharge Monitoring Report (DMR)**

Permit Number: WA0020486 **Permittee:** MONROE STP

Facility County: Snohomish **Receiving Waterbody:**

Monitoring Period: 02/01/2022 - 02/28/2022 **Outfall:** 001 **Version:** 1

Week	Monitoring Point	Total BOD5 Total Milligrams/L (mg/L) 3/Week Composite sample (24 hour)	BOD5 Calculated Calculated Lbs/Day 3/Week Calculated	Solids (Residue) Total suspended (TSS) Milligrams/L (mg/L) 3/Week Composite sample (24 hour)	Solids (Residue) Total suspended (TSS) Lbs/Day 3/Week Calculated	Flow Million Gallons/Day Continuous Metered/Recorded	Total BOD5 Total Milligrams/L (mg/L) 3/Week Composite sample (24 hour)	BOD5 Calculated Calculated Lbs/Day 3/Week Calculated	Total BOD5 Total Percent Monthly Calculated	Solids (Residue) Total suspended (TSS) Milligrams/L (mg/L) 3/Week Composite sample (24 hour)	Solids (Residue) Total suspended (TSS) Lbs/Day 3/Week Calculated	Solids (Residue) Total suspended (TSS) Percent Monthly Calculated
		IN1	IN1	IN1	IN1	001	001	001	001	001	001	001
1-T	**2/1/22**	158	2850	230	4149	2.055	4	72	97	3	54	99
1-W	**2/2/22**	222	3673	136	2250	2.163	5	83	98	2	33	99
1-Th	**2/3/22**					1.984						
1-F	**2/4/22**					2.002						
1-Sa	**2/5/22**					2.119						
2-Su	**2/6/22**					1.974						
2-M	**2/7/22**	242	3952	98	1600	1.931	9	147	96	5	82	95
2-T	**2/8/22**	227	3593	128	2026	1.958	4	63	98	4	63	97
2-W	**2/9/22**	194	3073	214	3389	1.898	4	63	98	5	79	98
2-Th	**2/10/22**					1.899						
2-F	**2/11/22**					1.815						
2-Sa	**2/12/22**					1.428						
3-Su	**2/13/22**					1.409						
3-M	**2/14/22**					1.378						
3-T	**2/15/22**	185	2828	122	1865	1.589	9	138	95	5	76	96
3-W	**2/16/22**	296	4552	364	5598	1.833	4	62	99	6	92	98
3-Th	**2/17/22**	244	3736	162	2481	1.844	8	122	97	6	92	96
3-F	**2/18/22**					1.836						
3-Sa	**2/19/22**					1.793						
4-Su	**2/20/22**					1.718						
4-M	**2/21/22**	233	3702	186	2955	1.804	11	175	95	5	79	97
4-T	**2/22/22**	331	5165	284	4432	1.905	5	78	98	4	62	99
4-W	**2/23/22**	221	3496	172	2721	1.871	6	95	97	4	63	98
4-Th	**2/24/22**					1.897						
4-F	**2/25/22**					1.410						
4-Sa	**2/26/22**					1.740						
5-Su	**2/27/22**					1.881						
5-M	**2/28/22**	143	3435	122	2930	2.309	11	264	92	5	120	96
Daily Minimum												
Average		225	3671	185	3033	1.837	7	114	97	5	75	97
		Report Only	DL: 6090	Report Only	DL: 5940	DL: 2.84	<= 30	<= 711	>= 85	<= 30	<= 711	>= 85
Weekly Average							7	116		6	86	
							<= 45	<= 1066		<= 45	<= 1066	
Maximum		331	5165	364	5598	2.309						
		Report Only	Report Only	Report Only	Report Only	Report Only						
Daily Maximum												
Monthly geometric mean												
Weekly Geometric Mean												

Week	Monitoring Point	Fecal Coliform #/100ml 3/Week Grab	pH Standard Units 1/Day Grab	Temperature Measured Degrees C Continuous Measurement	Temperature (7-DAD Max) Calculated Degrees C 1/Day Calculated
		001	001	001	001
1-T	**2/1/22**	1	6.7	13.1	12.7
1-W	**2/2/22**	1	6.8	13.2	12.8
1-Th	**2/3/22**		6.8	13.5	12.9
1-F	**2/4/22**		6.7	13.4	13.0
1-Sa	**2/5/22**		6.7	13.5	13.1
2-Su	**2/6/22**		6.6	13.4	13.2
2-M	**2/7/22**	1	7.2	13.8	13.4
2-T	**2/8/22**	1	6.8	14.0	13.5
2-W	**2/9/22**	1	7.2	14.3	13.7
2-Th	**2/10/22**		7.1	14.3	13.8
2-F	**2/11/22**		6.8	14.3	13.9
2-Sa	**2/12/22**		7.2	14.5	14.1
3-Su	**2/13/22**		7.1	14.6	14.3
3-M	**2/14/22**	2	7.3	14.9	14.4
3-T	**2/15/22**	6	7.2	14.9	14.5
3-W	**2/16/22**	2	7.2	14.6	14.6
3-Th	**2/17/22**		7.5	16.8	14.9
3-F	**2/18/22**		7.0	14.3	14.9
3-Sa	**2/19/22**		6.8	14.7	15.0
4-Su	**2/20/22**		6.6	13.2	14.8
4-M	**2/21/22**		6.9	13.9	14.6
4-T	**2/22/22**	2	7.1	15.5	14.7
4-W	**2/23/22**	2	7.1	14.3	14.7
4-Th	**2/24/22**	1	7.3	14.8	14.4
4-F	**2/25/22**		7.0	15.5	14.6
4-Sa	**2/26/22**		6.9	14.0	14.5
5-Su	**2/27/22**		6.8	13.5	14.5
5-M	**2/28/22**	2	7.0	14.9	14.6
Daily Minimum			6.6		
			>= 6.0 (RO)		
Average					
Weekly Average					
Maximum					15.0
					Report Only
Daily Maximum			7.5	16.8	
			<= 9.0 (RO)	Report Only	
Monthly geometric mean		2			
		<= 100			
Weekly Geometric Mean		3			
		<= 200			

I certify under penalty of law, that this document and all attachments were prepared under my direction or supervision in accordance with a system designed to assure that qualified personnel properly gather and evaluate the information submitted. Based on my inquiry of the person or persons who manage the system or those persons directly responsible for gathering information, the information submitted is, to the best of my knowledge and belief, true, accurate, and complete. I am aware that there are significant penalties for submitting false information, including the possibility of fine and imprisonment for knowing violations.

Donovan Sheppard	3/14/2022 12:03:43 PM
Signature	**Date**

Washington State Department of Ecology **Discharge Monitoring Report (DMR)**

Permit Number: WA0020486 **Permittee:** MONROE STP

Facility County: Snohomish **Receiving Waterbody:**

Monitoring Period: 03/01/2022 - 03/31/2022 **Outfall:** 001 **Version:** 1

Week	Monitoring Point	Total BOD5 Total Milligrams/L (mg/L) 3/Week Composite sample (24 hour)	BOD5 Calculated Calculated Lbs/Day 3/Week Calculated	Solids (Residue) Total suspended (TSS) Milligrams/L (mg/L) 3/Week Composite sample (24 hour)	Solids (Residue) Total suspended (TSS) Lbs/Day 3/Week Calculated	Flow Million Gallons/Day Continuous Metered/Recorded	Total BOD5 Total Milligrams/L (mg/L) 3/Week Composite sample (24 hour)	BOD5 Calculated Calculated Lbs/Day 3/Week Calculated	Total BOD5 Total Percent Monthly Calculated	Solids (Residue) Total suspended (TSS) Milligrams/L (mg/L) 3/Week Composite sample (24 hour)	Solids (Residue) Total suspended (TSS) Lbs/Day 3/Week Calculated	Solids (Residue) Total suspended (TSS) Percent Monthly Calculated
		IN1	IN1	IN1	IN1	001	001	001	001	001	001	001
1-T	**3/1/22**	218	4083	222	4158	2.880	15	281	93	6	112	97
1-W	**3/2/22**	214	4062	186	3531	2.246	9	171	96	5	95	97
1-Th	**3/3/22**					2.276						
1-F	**3/4/22**					2.159						
1-Sa	**3/5/22**					2.123						
2-Su	**3/6/22**					1.906						
2-M	**3/7/22**	404	5856	476	6900	1.947	11	159	97	3	43	99
2-T	**3/8/22**	406	6853	324	5469	1.738	1	17	100	5	84	98
2-W	**3/9/22**	353	4934	192	2684	2.024	6	84	98	3	42	98
2-Th	**3/10/22**					1.676						
2-F	**3/11/22**					1.784						
2-Sa	**3/12/22**					1.723						
3-Su	**3/13/22**					1.714						
3-M	**3/14/22**	177	3364	140	2661	1.735	12	228	93	9	171	94
3-T	**3/15/22**	202	3321	144	2367	2.279	5	82	98	4	66	97
3-W	**3/16/22**	265	3817	228	3284	1.971	9	130	97	3	43	99
3-Th	**3/17/22**					1.727						
3-F	**3/18/22**					1.915						
3-Sa	**3/19/22**					1.840						
4-Su	**3/20/22**					2.412						
4-M	**3/21/22**	204	4226	170	3522	2.265	13	269	94	3	62	98
4-T	**3/22/22**	247	4629	156	2923	1.484	4	75	98	4	75	97
4-W	**3/23/22**	216	3842	186	3309	2.247	5	89	98	2	36	99
4-Th	**3/24/22**					2.133						
4-F	**3/25/22**					2.032						
4-Sa	**3/26/22**					1.808						
5-Su	**3/27/22**					1.795						
5-M	**3/28/22**	349	5414	292	4530	1.783	16	248	95	4	62	99
5-T	**3/29/22**	210	2976	268	3797	1.860	5	71	98	5	71	98
5-W	**3/30/22**	262	3787	260	3758	1.699	6	87	98	4	58	98
5-Th	**3/31/22**					1.883						
Daily Minimum												
Average		266	4369	232	3778	2.009	8	142	97	4	73	98
		Report Only	DL: 6090	Report Only	DL: 5940	DL: 2.84	<= 30	<= 711	>= 85	<= 30	<= 711	>= 85
Weekly Average							9	226		5	93	
							<= 45	<= 1066		<= 45	<= 1066	
Maximum		406	6853	476	6900	2.880						
		Report Only	Report Only	Report Only	Report Only	Report Only						
Daily Maximum												
Monthly geometric mean												
Weekly Geometric Mean												

Week	Monitoring Point	Fecal Coliform #/100ml 3/Week Grab	pH Standard Units 1/Day Grab	Temperature Measured Degrees C Continuous Measurement	Temperature (7-DAD Max) Calculated Degrees C 1/Day Calculated
		001	001	001	001
1-T	**3/1/22**	2	7.2	15.8	14.7
1-W	**3/2/22**	1	7.5	15.9	14.9
1-Th	**3/3/22**		7.2	16.8	15.2
1-F	**3/4/22**		7.1	17.2	15.4
1-Sa	**3/5/22**		6.8	13.0	15.3
2-Su	**3/6/22**		6.7	14.0	15.4
2-M	**3/7/22**	1	7.2	14.7	15.3
2-T	**3/8/22**	1	7.2	14.8	15.2
2-W	**3/9/22**	1	7.3	14.8	15.0
2-Th	**3/10/22**		7.0	14.6	14.7
2-F	**3/11/22**		7.2	14.6	14.4
2-Sa	**3/12/22**		7.2	14.9	14.6
3-Su	**3/13/22**		7.2	14.8	14.7
3-M	**3/14/22**	1	7.0	14.8	14.8
3-T	**3/15/22**	1	6.9	14.5	14.7
3-W	**3/16/22**	1	6.6	14.7	14.7
3-Th	**3/17/22**		6.9	15.0	14.8
3-F	**3/18/22**		6.9	14.9	14.8
3-Sa	**3/19/22**		6.8	14.9	14.8
4-Su	**3/20/22**		6.5	14.0	14.7
4-M	**3/21/22**	1	6.6	14.1	14.6
4-T	**3/22/22**	3	7.3	14.5	14.6
4-W	**3/23/22**	1	6.6	14.8	14.6
4-Th	**3/24/22**		7.2	14.9	14.6
4-F	**3/25/22**		6.7	15.2	14.6
4-Sa	**3/26/22**		6.4	15.3	14.7
5-Su	**3/27/22**		6.8	15.6	14.9
5-M	**3/28/22**	1	6.8	15.8	15.2
5-T	**3/29/22**	1	6.4	16.1	15.4
5-W	**3/30/22**	1	6.5	16.0	15.6
5-Th	**3/31/22**		6.6	15.8	15.7
Daily Minimum			6.4		
			>= 6.0 (RO)		
Average					
Weekly Average					
Maximum					15.7
					Report Only
Daily Maximum			7.5	17.2	
			<= 9.0 (RO)	Report Only	
Monthly geometric mean		1			
		<= 100			
Weekly Geometric Mean		2			
		<= 200			

I certify under penalty of law, that this document and all attachments were prepared under my direction or supervision in accordance with a system designed to assure that qualified personnel properly gather and evaluate the information submitted. Based on my inquiry of the person or persons who manage the system or those persons directly responsible for gathering information, the information submitted is, to the best of my knowledge and belief, true, accurate, and complete. I am aware that there are significant penalties for submitting false information, including the possibility of fine and imprisonment for knowing violations.

Donovan Sheppard	4/14/2022 2:10:54 PM
Signature	**Date**

Washington State Department of Ecology **Discharge Monitoring Report (DMR)**

Permit Number: WA0020486 **Permittee:** MONROE STP

Facility County: Snohomish **Receiving Waterbody:**

Monitoring Period: 04/01/2022 - 04/30/2022 **Outfall:** 001 **Version:** 1

Week	Monitoring Point	Total BOD5 Total Milligrams/L (mg/L) 3/Week Composite sample (24 hour)	BOD5 Calculated Calculated Lbs/Day 3/Week Calculated	Solids (Residue) Total suspended (TSS) Milligrams/L (mg/L) 3/Week Composite sample (24 hour)	Solids (Residue) Total suspended (TSS) Lbs/Day 3/Week Calculated	Flow Million Gallons/Day Continuous Metered/Recorded	Total BOD5 Total Milligrams/L (mg/L) 3/Week Composite sample (24 hour)	BOD5 Calculated Calculated Lbs/Day 3/Week Calculated	Total BOD5 Total Percent Monthly Calculated	Solids (Residue) Total suspended (TSS) Milligrams/L (mg/L) 3/Week Composite sample (24 hour)	Solids (Residue) Total suspended (TSS) Lbs/Day 3/Week Calculated	Solids (Residue) Total suspended (TSS) Percent Monthly Calculated
		IN1	IN1	IN1	IN1	001	001	001	001	001	001	001
1-F	**4/1/22**					1.733						
1-Sa	**4/2/22**					1.778						
2-Su	**4/3/22**					1.792						
2-M	**4/4/22**	240	3867	246	3964	1.736	13	209	95	3	48	99
2-T	**4/5/22**	262	3752	252	3609	1.932	5	72	98	2	29	99
2-W	**4/6/22**	264	3774	212	3030	1.717	4	57	98	3	43	99
2-Th	**4/7/22**					1.714						
2-F	**4/8/22**					1.645						
2-Sa	**4/9/22**					1.877						
3-Su	**4/10/22**					1.627						
3-M	**4/11/22**	241	3702	256	3933	2.099	11	169	95	3	46	99
3-T	**4/12/22**	194	3013	298	4628	1.842	2	31	99	4	62	99
3-W	**4/13/22**	247	3595	236	3435	1.862	5	73	98	2	29	99
3-Th	**4/14/22**					1.745						
3-F	**4/15/22**					1.735						
3-Sa	**4/16/22**					1.624						
4-Su	**4/17/22**					1.951						
4-M	**4/18/22**	275	4319	238	3738	1.572	11	173	96	6	94	97
4-T	**4/19/22**	283	3802	390	5240	1.883	4	54	99	4	54	99
4-W	**4/20/22**	317	4579	228	3293	1.611	4	58	99	3	43	99
4-Th	**4/21/22**					1.732						
4-F	**4/22/22**					1.336						
4-Sa	**4/23/22**					1.804						
5-Su	**4/24/22**					1.526						
5-M	**4/25/22**	339	4922	292	4240	1.553	13	189	96	5	73	98
5-T	**4/26/22**	339	4374	352	4541	1.741	5	65	99	4	52	99
5-W	**4/27/22**	282	3812	250	3380	1.547	6	81	98	5	68	98
5-Th	**4/28/22**					1.621						
5-F	**4/29/22**					1.502						
5-Sa	**4/30/22**					1.632						
Daily Minimum												
Average		274	3959	271	3919	1.716	7	102	97	4	53	99
		Report Only	DL: 6090	Report Only	DL: 5940	DL: 2.84	<= 30	<= 711	>= 85	<= 30	<= 711	>= 85
Weekly Average							8	112		5	64	
							<= 45	<= 1066		<= 45	<= 1066	
Maximum		320	4922	298	5240	2.099						
		Report Only	Report Only	Report Only	Report Only	Report Only						
Daily Maximum												
Monthly geometric mean												
Weekly Geometric Mean												

Week	Monitoring Point	Fecal Coliform #/100ml 3/Week Grab	pH Standard Units 1/Day Grab	Temperature Measured Degrees C Continuous Measurement	Temperature (7-DAD Max) Calculated Degrees C 1/Day Calculated
		001	001	001	001
1-F	**4/1/22**		6.4	15.7	14.7
1-Sa	**4/2/22**		6.6	15.8	14.9
2-Su	**4/3/22**		6.8	15.6	15.2
2-M	**4/4/22**	2	6.8	15.6	15.4
2-T	**4/5/22**	1	6.8	15.5	15.3
2-W	**4/6/22**	1	6.8	15.7	15.4
2-Th	**4/7/22**		6.8	16.1	15.3
2-F	**4/8/22**		6.7	16.0	15.2
2-Sa	**4/9/22**		6.7	15.8	15.0
3-Su	**4/10/22**		6.8	15.6	14.7
3-M	**4/11/22**	1	7.3	15.0	14.4
3-T	**4/12/22**	1	7.1	15.1	14.6
3-W	**4/13/22**	1	7.0	15.3	14.7
3-Th	**4/14/22**		7.0	15.3	14.8
3-F	**4/15/22**		6.9	15.6	14.7
3-Sa	**4/16/22**		6.8	15.4	14.7
4-Su	**4/17/22**		6.6	15.6	14.8
4-M	**4/18/22**	1	6.7	15.7	14.8
4-T	**4/19/22**	1	6.7	16.0	14.8
4-W	**4/20/22**	5	6.7	15.8	14.7
4-Th	**4/21/22**		7.2	15.8	14.6
4-F	**4/22/22**		6.9	16.1	14.6
4-Sa	**4/23/22**		6.8	16.7	14.6
5-Su	**4/24/22**		6.7	16.9	14.6
5-M	**4/25/22**	1	6.8	16.9	14.6
5-T	**4/26/22**	1	6.7	17.1	14.7
5-W	**4/27/22**	1	6.7	17.2	14.9
5-Th	**4/28/22**		6.9	17.0	15.2
5-F	**4/29/22**		7.0	17.4	15.4
5-Sa	**4/30/22**		6.9	17.5	15.6
Daily Minimum			6.4		
			>= 6.0 (RO)		
Average					
Weekly Average					
Maximum					15.6
					Report Only
Daily Maximum			7.3	17.5	
			<= 9.0 (RO)	Report Only	
Monthly geometric mean		1			
		<= 100			
Weekly Geometric Mean		3			
		<= 200			

I certify under penalty of law, that this document and all attachments were prepared under my direction or supervision in accordance with a system designed to assure that qualified personnel properly gather and evaluate the information submitted. Based on my inquiry of the person or persons who manage the system or those persons directly responsible for gathering information, the information submitted is, to the best of my knowledge and belief, true, accurate, and complete. I am aware that there are significant penalties for submitting false information, including the possibility of fine and imprisonment for knowing violations.

Donovan Sheppard	5/10/2022 8:58:31 AM
Signature	**Date**

Washington State Department of Ecology **Discharge Monitoring Report (DMR)**

Permit Number: WA0020486 **Permittee:** MONROE STP

Facility County: Snohomish **Receiving Waterbody:**

Monitoring Period: 05/01/2022 - 05/31/2022 **Outfall:** 001 **Version:** 1

Week	Monitoring Point	Total BOD5 Total Milligrams/L (mg/L) 3/Week Composite sample (24 hour)	BOD5 Calculated Calculated Lbs/Day 3/Week Calculated	Solids (Residue) Total suspended (TSS) Milligrams/L (mg/L) 3/Week Composite sample (24 hour)	Solids (Residue) Total suspended (TSS) Lbs/Day 3/Week Calculated	Flow Million Gallons/Day Continuous Metered/Recorded	Total BOD5 Total Milligrams/L (mg/L) 3/Week Composite sample (24 hour)	BOD5 Calculated Calculated Lbs/Day 3/Week Calculated	Total BOD5 Total Percent Monthly Calculated	Solids (Residue) Total suspended (TSS) Milligrams/L (mg/L) 3/Week Composite sample (24 hour)	Solids (Residue) Total suspended (TSS) Lbs/Day 3/Week Calculated	Solids (Residue) Total suspended (TSS) Percent Monthly Calculated
		IN1	IN1	IN1	IN1	001	001	001	001	001	001	001
1-Su	**5/1/22**					1.466						
1-M	**5/2/22**	271	4220	198	3083	1.481	15	234	94	2	31	99
1-T	**5/3/22**	312	4184	324	4345	1.867	4	54	99	3	40	99
1-W	**5/4/22**	322	4058	296	3730	1.608	4	50	99	4	50	99
1-Th	**5/5/22**					1.511						
1-F	**5/6/22**					1.881						
1-Sa	**5/7/22**					1.792						
2-Su	**5/8/22**					2.182						
2-M	**5/9/22**	283	4289	314	4758	1.909	11	167	96	4	61	99
2-T	**5/10/22**	335	5205	250	3884	1.817	3	47	99	4	62	98
2-W	**5/11/22**	269	3675	214	2923	1.863	4	55	99	5	61	98
2-Th	**5/12/22**					1.638						
2-F	**5/13/22**					2.085						
2-Sa	**5/14/22**					1.671						
3-Su	**5/15/22**					1.737						
3-M	**5/16/22**	309	4935	306	4887	1.929	12	192	96	5	80	98
3-T	**5/17/22**	295	4084	376	5205	1.915	3	42	99	4	55	99
3-W	**5/18/22**	312	4283	332	4558	1.660	4	55	99	4	55	99
3-Th	**5/19/22**					1.646						
3-F	**5/20/22**					1.397						
3-Sa	**5/21/22**					2.032						
4-Su	**5/22/22**					2.062						
4-M	**5/23/22**	285	3282	232	2672	2.037	19	219	93	7	81	97
4-T	**5/24/22**	334	3529	366	3867	1.429	5	53	99	8	85	98
4-W	**5/25/22**	311	4417	284	4034	1.381	12	170	96	10	135	97
4-Th	**5/26/22**					1.267						
4-F	**5/27/22**					1.703						
4-Sa	**5/28/22**					1.555						
5-Su	**5/29/22**					1.551						
5-M	**5/30/22**	293	4298	230	3374	2.029	19	256	94	10	135	96
5-T	**5/31/22**	304	4460	238	3491	1.617	5	73	98	6	88	97
Daily Minimum												
Average		303	4180	291	3996	1.733	8	111	97	5	66	98
		Report Only	DL: 6090	Report Only	DL: 5940	DL: 2.84	<= 30	<= 711	>= 85	<= 30	<= 711	>= 85
Weekly Average							12	147		8	100	
							<= 45	<= 1066		<= 45	<= 1066	
Maximum		335	5205	376	5205	2.182						
		Report Only	Report Only	Report Only	Report Only	Report Only						
Daily Maximum												
Monthly geometric mean												
Weekly Geometric Mean												

Week	Monitoring Point	Fecal Coliform #/100ml 3/Week Grab	pH Standard Units 1/Day Grab	Temperature Measured Degrees C Continuous Measurement	Temperature (7-DAD Max) Calculated Degrees C 1/Day Calculated
		001	001	001	001
1-Su	**5/1/22**		6.9	17.4	17.2
1-M	**5/2/22**	1	6.9	17.4	17.3
1-T	**5/3/22**	1	6.8	17.5	17.3
1-W	**5/4/22**	1	7.0	17.8	17.4
1-Th	**5/5/22**		6.9	17.5	17.5
1-F	**5/6/22**		6.7	17.4	17.5
1-Sa	**5/7/22**		6.5	17.3	17.5
2-Su	**5/8/22**		6.8	16.4	17.3
2-M	**5/9/22**	1	6.9	16.8	17.2
2-T	**5/10/22**	1	7.1	17.1	17.2
2-W	**5/11/22**	3	6.9	17.4	17.1
2-Th	**5/12/22**		6.9	17.3	17.1
2-F	**5/13/22**		7.0	17.0	17.0
2-Sa	**5/14/22**		6.8	17.1	17.0
3-Su	**5/15/22**		6.9	17.3	17.1
3-M	**5/16/22**	3	7.0	17.8	17.3
3-T	**5/17/22**	1	6.9	18.0	17.4
3-W	**5/18/22**	2	6.9	18.1	17.5
3-Th	**5/19/22**		8.0	18.0	17.6
3-F	**5/20/22**		6.9	18.0	17.7
3-Sa	**5/21/22**		6.7	18.1	17.9
4-Su	**5/22/22**	5	6.7	18.4	18.0
4-M	**5/23/22**	1	6.8	18.9	18.2
4-T	**5/24/22**	1	7.0	18.7	18.3
4-W	**5/25/22**		6.9	19.2	18.5
4-Th	**5/26/22**		6.8	18.7	18.6
4-F	**5/27/22**		6.8	19.2	18.7
4-Sa	**5/28/22**		6.8	19.0	18.9
5-Su	**5/29/22**		6.8	18.6	18.9
5-M	**5/30/22**		6.7	18.2	18.8
5-T	**5/31/22**	5	6.7	19.0	18.8
Daily Minimum			6.5		
			>= 6.0 (RO)		
Average					
Weekly Average					
Maximum					18.9
					Report Only
Daily Maximum			8.0	19.2	
			<= 9.0 (RO)	Report Only	
Monthly geometric mean		1			
		<= 100			
Weekly Geometric Mean		4			
		<= 200			

I certify under penalty of law, that this document and all attachments were prepared under my direction or supervision in accordance with a system designed to assure that qualified personnel properly gather and evaluate the information submitted. Based on my inquiry of the person or persons who manage the system or those persons directly responsible for gathering information, the information submitted is, to the best of my knowledge and belief, true, accurate, and complete. I am aware that there are significant penalties for submitting false information, including the possibility of fine and imprisonment for knowing violations.

Donovan Sheppard	6/15/2022 9:12:45 AM
Signature	**Date**

Washington State Department of Ecology **Discharge Monitoring Report (DMR)**

Permit Number: WA0020486 **Permittee:** MONROE STP

Facility County: Snohomish **Receiving Waterbody:**

Monitoring Period: 04/01/2022 - 06/30/2022 **Outfall:** 001 **Version:** 1

Week	Monitoring Point	Phosphorus Total Milligrams/L (mg/L) Quarterly Composite sample (24 hour)	Total Reactive Phosphorus Total Reactive Milligrams/L (mg/L) Quarterly Composite sample (24 hour)	Ammonia Total Milligrams/L (mg/L) Quarterly Composite sample (24 hour)	Nitrate + Nitrite Total Milligrams/L (mg/L) Quarterly Composite sample (24 hour)	TKN Total Milligrams/L (mg/L) Quarterly Composite sample (24 hour)
		001	001	001	001	001
6-T	**5/3/22**	3.52	3.7	0.869	9.76	4.00
Average		3.52	3.7	0.869	9.76	4.00
		Report Only	Report Only	Report Only	Report Only	Report Only

I certify under penalty of law, that this document and all attachments were prepared under my direction or supervision in accordance with a system designed to assure that qualified personnel properly gather and evaluate the information submitted. Based on my inquiry of the person or persons who manage the system or those persons directly responsible for gathering information, the information submitted is, to the best of my knowledge and belief, true, accurate, and complete. I am aware that there are significant penalties for submitting false information, including the possibility of fine and imprisonment for knowing violations.

Donovan Sheppard — **Signature**

5/19/2022 10:54:36 AM — **Date**

Washington State Department of Ecology **Discharge Monitoring Report (DMR)**

Permit Number: WA0020486 **Permittee:** MONROE STP

Facility County: Snohomish **Receiving Waterbody:**

Monitoring Period: 06/01/2022 - 06/30/2022 **Outfall:** 001 **Version:** 1

Week	Monitoring Point	Total BOD5 Total Milligrams/L (mg/L) 3/Week Composite sample (24 hour)	BOD5 Calculated Calculated Lbs/Day 3/Week Calculated	Solids (Residue) Total suspended (TSS) Milligrams/L (mg/L) 3/Week Composite sample (24 hour)	Solids (Residue) Total suspended (TSS) Lbs/Day 3/Week Calculated	Flow Million Gallons/Day Continuous Metered/Recorded	Total BOD5 Total Milligrams/L (mg/L) 3/Week Composite sample (24 hour)	BOD5 Calculated Calculated Lbs/Day 3/Week Calculated	Total BOD5 Total Percent Monthly Calculated	Solids (Residue) Total suspended (TSS) Milligrams/L (mg/L) 3/Week Composite sample (24 hour)	Solids (Residue) Total suspended (TSS) Lbs/Day 3/Week Calculated	Solids (Residue) Total suspended (TSS) Percent Monthly Calculated
		IN1	IN1	IN1	IN1	001	001	001	001	001	001	001
1-W	**6/1/22**	290	3974	276	3782	1.759	5	69	98	6	82	98
1-Th	**6/2/22**					1.643						
1-F	**6/3/22**					1.773						
1-Sa	**6/4/22**					1.999						
2-Su	**6/5/22**					1.708						
2-M	**6/6/22**	211	3270	144	2231	2.244	15	232	93	5	77	97
2-T	**6/7/22**	324	4829	238	3547	1.858	4	60	99	5	75	98
2-W	**6/8/22**	175	2503	234	3347	1.787	4	57	98	4	57	98
2-Th	**6/9/22**					1.715						
2-F	**6/10/22**					2.195						
2-Sa	**6/11/22**					1.949						
3-Su	**6/12/22**					1.640						
3-M	**6/13/22**					1.815						
3-T	**6/14/22**	237	4295	134	2428	2.471	12	217	95	4	72	97
3-W	**6/15/22**	224	3861	72	1241	2.173	5	86	98	9	155	98
3-Th	**6/16/22**	248	3493	186	2620	2.067	6	85	98	4	56	98
3-F	**6/17/22**					1.689						
3-Sa	**6/18/22**					1.824						
4-Su	**6/19/22**					2.017						
4-M	**6/20/22**	226	3244	200	2871	1.769	9	129	98	5	72	98
4-T	**6/21/22**	262	4053	282	4363	1.721	4	62	98	3	46	99
4-W	**6/22/22**	305	4075	248	3313	1.855	5	67	98	2	27	99
4-Th	**6/23/22**					1.602						
4-F	**6/24/22**					1.653						
4-Sa	**6/25/22**					1.598						
5-Su	**6/26/22**					1.551						
5-M	**6/27/22**					1.552						
5-T	**6/28/22**	331	4356	300	3948	1.725	24	316	93	6	79	98
5-W	**6/29/22**	407	5927	470	6844	1.578	8	116	98	4	58	99
5-Th	**6/30/22**	307	4470	196	2854	1.399	6	87	98	4	58	98
Daily Minimum												
Average		273	4027	229	3338	1.809	8	122	97	5	70	97
		Report Only	DL: 6090	Report Only	DL: 5940	DL: 2.84	<= 30	<= 711	>= 85	<= 30	<= 711	>= 85
Weekly Average							19	173		6	98	
							<= 45	<= 1066		<= 45	<= 1066	
Maximum		407	5927	470	6844	2.471						
		Report Only	Report Only	Report Only	Report Only	Report Only						
Daily Maximum												
Monthly geometric mean												
Weekly Geometric Mean												

Week	Monitoring Point	Fecal Coliform #/100ml 3/Week Grab	pH Standard Units 1/Day Grab	Temperature Measured Degrees C Continuous Measurement	Temperature (7-DAD Max) Calculated Degrees C 1/Day Calculated
		001	001	001	001
1-W	**6/1/22**	7	7.0	20.0	18.6
1-Th	**6/2/22**	3	7.5	20.0	18.8
1-F	**6/3/22**		7.4	20.0	18.8
1-Sa	**6/4/22**		7.0	20.0	19.0
2-Su	**6/5/22**		6.8	19.3	19.2
2-M	**6/6/22**	1	6.8	19.4	19.5
2-T	**6/7/22**	2	6.6	19.7	19.7
2-W	**6/8/22**	1	6.6	19.9	19.7
2-Th	**6/9/22**		6.8	19.7	19.7
2-F	**6/10/22**		6.6	19.9	19.7
2-Sa	**6/11/22**		6.6	19.8	19.7
3-Su	**6/12/22**		6.5	19.4	19.7
3-M	**6/13/22**	1	6.7	19.1	19.6
3-T	**6/14/22**	1	6.6	19.0	19.5
3-W	**6/15/22**	2	6.6	18.8	19.4
3-Th	**6/16/22**		6.7	19.5	19.4
3-F	**6/17/22**		6.7	19.0	19.2
3-Sa	**6/18/22**		6.7	19.0	19.1
4-Su	**6/19/22**		6.6	19.0	19.1
4-M	**6/20/22**		6.6	19.0	19.1
4-T	**6/21/22**	1	6.8	19.5	19.1
4-W	**6/22/22**	1	6.7	19.9	19.3
4-Th	**6/23/22**	1	6.5	20.2	19.4
4-F	**6/24/22**		6.2	20.2	19.5
4-Sa	**6/25/22**		6.7	20.6	19.8
5-Su	**6/26/22**		6.8	20.7	20.0
5-M	**6/27/22**	2	7.1	21.0	20.3
5-T	**6/28/22**	1	6.7	21.2	20.5
5-W	**6/29/22**	1	6.7	21.0	20.7
5-Th	**6/30/22**		7.2	21.2	20.8
Daily Minimum			6.2		
			>= 6.0 (RO)		
Average					
Weekly Average					
Maximum					20.8
					Report Only
Daily Maximum			7.5	21.2	
			<= 9.0 (RO)	Report Only	
Monthly geometric mean		1			
		<= 100			
Weekly Geometric Mean		5			
		<= 200			

I certify under penalty of law, that this document and all attachments were prepared under my direction or supervision in accordance with a system designed to assure that qualified personnel properly gather and evaluate the information submitted. Based on my inquiry of the person or persons who manage the system or those persons directly responsible for gathering information, the information submitted is, to the best of my knowledge and belief, true, accurate, and complete. I am aware that there are significant penalties for submitting false information, including the possibility of fine and imprisonment for knowing violations.

Donovan Sheppard	7/12/2022 6:20:14 PM
Signature	**Date**

Washington State Department of Ecology **Discharge Monitoring Report (DMR)**

Permit Number: WA0020486 **Permittee:** MONROE STP

Facility County: Snohomish **Receiving Waterbody:**

Monitoring Period: 07/01/2022 - 07/31/2022 **Outfall:** 001 **Version:** 1

Week	Monitoring Point	Total BOD5 Total Milligrams/L (mg/L) 3/Week Composite sample (24 hour)	BOD5 Calculated Calculated Lbs/Day 3/Week Calculated	Solids (Residue) Total suspended (TSS) Milligrams/L (mg/L) 3/Week Composite sample (24 hour)	Solids (Residue) Total suspended (TSS) Lbs/Day 3/Week Calculated	Flow Million Gallons/Day Continuous Metered/Recorded	Total BOD5 Total Milligrams/L (mg/L) 3/Week Composite sample (24 hour)	BOD5 Calculated Calculated Lbs/Day 3/Week Calculated	Total BOD5 Total Percent Monthly Calculated	Solids (Residue) Total suspended (TSS) Milligrams/L (mg/L) 3/Week Composite sample (24 hour)	Solids (Residue) Total suspended (TSS) Lbs/Day 3/Week Calculated	Solids (Residue) Total suspended (TSS) Percent Monthly Calculated
		IN1	IN1	IN1	IN1	001	001	001	001	001	001	001
1-F	**7/1/22**					1.746						
1-Sa	**7/2/22**					1.564						
2-Su	**7/3/22**					1.481						
2-M	**7/4/22**	349	4459	270	3450	1.526	8	102	98	13	166	95
2-T	**7/5/22**	355	4767	352	4726	1.532	3	40	99	11	148	97
2-W	**7/6/22**	338	4121	318	3877	1.610	6	73	98	6	73	98
2-Th	**7/7/22**					1.462						
2-F	**7/8/22**					1.676						
2-Sa	**7/9/22**					1.477						
3-Su	**7/10/22**					1.391						
3-M	**7/11/22**	390	5090	344	4490	1.421	15	198	96	6	78	98
3-T	**7/12/22**	296	3676	186	2310	1.565	5	62	98	5	62	97
3-W	**7/13/22**	361	4287	272	3230	1.489	7	83	98	7	83	97
3-Th	**7/14/22**					1.424						
3-F	**7/15/22**					1.442						
3-Sa	**7/16/22**					1.482						
4-Su	**7/17/22**					1.319						
4-M	**7/18/22**	349	4302	304	3747	1.448	12	148	97	10	123	97
4-T	**7/19/22**	366	4512	334	4117	1.478	6	74	98	11	136	97
4-W	**7/20/22**	381	4630	248	3014	1.478	8	97	98	14	170	94
4-Th	**7/21/22**					1.457						
4-F	**7/22/22**					1.480						
4-Sa	**7/23/22**					1.389						
5-Su	**7/24/22**					1.314						
5-M	**7/25/22**	409	4915	340	4086	1.537	16	192	96	17	204	95
5-T	**7/26/22**	327	4033	244	3010	1.441	10	123	97	13	160	95
5-W	**7/27/22**	354	4033	258	2939	1.479	8	91	98	10	114	96
5-Th	**7/28/22**					1.366						
5-F	**7/29/22**					1.524						
5-Sa	**7/30/22**					1.385						
6-Su	**7/31/22**					1.316						
Daily Minimum												
Average		356	4402	289	3583	1.479	9	107	98	10	127	96
		Report Only	DL: 6090	Report Only	DL: 5940	DL: 2.84	<= 30	<= 711	>= 85	<= 30	<= 711	>= 85
Weekly Average							11	135		13	184	
							<= 45	<= 1066		<= 45	<= 1066	
Maximum		409	5090	352	4726	1.746						
		Report Only	Report Only	Report Only	Report Only	Report Only						
Daily Maximum												
Monthly geometric mean												
Weekly Geometric Mean												

Week	Monitoring Point	Fecal Coliform #/100ml 3/Week Grab	pH Standard Units 1/Day Grab	Temperature Measured Degrees C Continuous Measurement	Temperature (7-DAD Max) Calculated Degrees C 1/Day Calculated
		001	001	001	001
1-F	**7/1/22**		7.0	21.3	21.0
1-Sa	**7/2/22**		6.9	21.4	21.1
2-Su	**7/3/22**		7.0	20.8	21.1
2-M	**7/4/22**		7.0	21.0	21.1
2-T	**7/5/22**	2	7.0	21.0	21.1
2-W	**7/6/22**	1	7.0	21.2	21.1
2-Th	**7/7/22**	2	7.0	21.6	21.2
2-F	**7/8/22**		6.8	21.9	21.3
2-Sa	**7/9/22**		6.8	22.1	21.4
3-Su	**7/10/22**		6.7	22.1	21.6
3-M	**7/11/22**	1	6.9	22.3	21.8
3-T	**7/12/22**	3	6.9	22.8	22.0
3-W	**7/13/22**	2	6.9	22.6	22.2
3-Th	**7/14/22**		6.6	22.5	22.3
3-F	**7/15/22**		6.5	22.5	22.4
3-Sa	**7/16/22**		6.8	22.6	22.5
4-Su	**7/17/22**		6.9	22.1	22.5
4-M	**7/18/22**	1	6.9	22.4	22.5
4-T	**7/19/22**	2	7.1	22.8	22.5
4-W	**7/20/22**	2	7.2	23.0	22.5
4-Th	**7/21/22**		7.0	23.0	22.6
4-F	**7/22/22**		7.2	23.2	22.7
4-Sa	**7/23/22**		7.4	23.0	22.8
5-Su	**7/24/22**		7.0	23.0	22.9
5-M	**7/25/22**	2	7.0	23.5	23.0
5-T	**7/26/22**	2	7.2	23.7	23.2
5-W	**7/27/22**	3	7.2	22.0	23.0
5-Th	**7/28/22**		7.2	22.0	22.9
5-F	**7/29/22**		7.2	22.4	22.8
5-Sa	**7/30/22**		7.2	21.8	22.6
6-Su	**7/31/22**		7.1	21.7	22.4
Daily Minimum			6.5		
			>= 6.0 (RO)		
Average					
Weekly Average					
Maximum					23.3
					Report Only
Daily Maximum			7.4	23.7	
			<= 9.0 (RO)	Report Only	
Monthly geometric mean		2			
		<= 100			
Weekly Geometric Mean		4			
		<= 200			

I certify under penalty of law, that this document and all attachments were prepared under my direction or supervision in accordance with a system designed to assure that qualified personnel properly gather and evaluate the information submitted. Based on my inquiry of the person or persons who manage the system or those persons directly responsible for gathering information, the information submitted is, to the best of my knowledge and belief, true, accurate, and complete. I am aware that there are significant penalties for submitting false information, including the possibility of fine and imprisonment for knowing violations.

Donovan Sheppard

Signature

8/11/2022 10:37:57 AM

Date

Washington State Department of Ecology — Discharge Monitoring Report (DMR)

Permit Number: WA0020486 **Permittee:** MONROE STP

Facility County: Snohomish **Receiving Waterbody:**

Monitoring Period: 07/01/2022 - 09/30/2022 **Outfall:** 001 **Version:** 1

Week	Monitoring Point	Phosphorus Total Milligrams/L (mg/L) Quarterly Composite sample (24 hour)	Total Reactive Phosphorus Total Reactive Milligrams/L (mg/L) Quarterly Composite sample (24 hour)	Ammonia Total Milligrams/L (mg/L) Quarterly Composite sample (24 hour)	Nitrate + Nitrite Total Milligrams/L (mg/L) Quarterly Composite sample (24 hour)	TKN Total Milligrams/L (mg/L) Quarterly Composite sample (24 hour)
		001	001	001	001	001
2-Th	**7/7/22**	4.07	4.0	0.149	8.55	0.856
Average		4.07	4.0	0.149	8.55	0.856
		Report Only	Report Only	Report Only	Report Only	Report Only

I certify under penalty of law, that this document and all attachments were prepared under my direction or supervision in accordance with a system designed to assure that qualified personnel properly gather and evaluate the information submitted. Based on my inquiry of the person or persons who manage the system or those persons directly responsible for gathering information, the information submitted is, to the best of my knowledge and belief, true, accurate, and complete. I am aware that there are significant penalties for submitting false information, including the possibility of fine and imprisonment for knowing violations.

Donovan Sheppard — **Signature**

8/8/2022 8:41:10 AM — **Date**

Washington State Department of Ecology **Discharge Monitoring Report (DMR)**

Permit Number: WA0020486 **Permittee:** MONROE STP

Facility County: Snohomish **Receiving Waterbody:**

Monitoring Period: 08/01/2022 - 08/31/2022 **Outfall:** 001 **Version:** 1

Week	Monitoring Point	Total BOD5 Total Milligrams/L (mg/L) 3/Week Composite sample (24 hour)	BOD5 Calculated Calculated Lbs/Day 3/Week Calculated	Solids (Residue) Total suspended (TSS) Milligrams/L (mg/L) 3/Week Composite sample (24 hour)	Solids (Residue) Total suspended (TSS) Lbs/Day 3/Week Calculated	Flow Million Gallons/Day Continuous Metered/Recorded	Total BOD5 Total Milligrams/L (mg/L) 3/Week Composite sample (24 hour)	BOD5 Calculated Calculated Lbs/Day 3/Week Calculated	Total BOD5 Total Percent Monthly Calculated	Solids (Residue) Total suspended (TSS) Milligrams/L (mg/L) 3/Week Composite sample (24 hour)	Solids (Residue) Total suspended (TSS) Lbs/Day 3/Week Calculated	Solids (Residue) Total suspended (TSS) Percent Monthly Calculated
		IN1	IN1	IN1	IN1	001	001	001	001	001	001	001
1-M	**8/1/22**	44	4988	342	3842	1.328	14	157	97	11	124	97
1-T	**8/2/22**	322	4380	300	4081	1.347	3	41	99	7	95	98
1-W	**8/3/22**	406	4832	422	5022	1.631	6	71	99	7	83	98
1-Th	**8/4/22**					1.427						
1-F	**8/5/22**					1.268						
1-Sa	**8/6/22**					1.113						
2-Su	**8/7/22**					1.080						
2-M	**8/8/22**	272	3407	256	3207	1.105	9	113	97	5	63	98
2-T	**8/9/22**	325	4386	238	3212	1.502	4	54	99	5	67	98
2-W	**8/10/22**	346	4655	266	3578	1.618	5	67	99	5	67	98
2-Th	**8/11/22**					1.613						
2-F	**8/12/22**					1.791						
2-Sa	**8/13/22**					1.442						
3-Su	**8/14/22**					1.296						
3-M	**8/15/22**	383	4721	412	5079	1.320	18	222	95	4	49	99
3-T	**8/16/22**	341	3973	260	3029	1.478	5	58	99	3	35	99
3-W	**8/17/22**	388	4501	284	3295	1.397	7	81	98	4	46	99
3-Th	**8/18/22**					1.391						
3-F	**8/19/22**					1.378						
3-Sa	**8/20/22**					1.347						
4-Su	**8/21/22**					1.273						
4-M	**8/22/22**	423	4226	380	3797	1.304	23	230	95	5	50	99
4-T	**8/23/22**	355	4856	294	4021	1.198	4	55	99	6	82	98
4-W	**8/24/22**	441	5289	306	3670	1.640	6	72	99	4	48	99
4-Th	**8/25/22**					1.438						
4-F	**8/26/22**					1.410						
4-Sa	**8/27/22**					1.400						
5-Su	**8/28/22**					1.292						
5-M	**8/29/22**					1.361						
5-T	**8/30/22**	317	3789	262	3131	1.435	6	72	98	15	179	94
5-W	**8/31/22**	352	4398	242	3023	1.433	6	75	98	15	187	94
Daily Minimum												
Average		365	4457	305	3713	1.387	8	98	98	7	84	98
		Report Only	DL: 6090	Report Only	DL: 5940	DL: 2.84	<= 30	<= 711	>= 85	<= 30	<= 711	>= 85
Weekly Average							11	120		15	183	
							<= 45	<= 1066		<= 45	<= 1066	
Maximum		444	5289	422	5079	1.791						
		Report Only	Report Only	Report Only	Report Only	Report Only						
Daily Maximum												
Monthly geometric mean												
Weekly Geometric Mean												

Week	Monitoring Point	Fecal Coliform #/100ml 3/Week Grab	pH Standard Units 1/Day Grab	Temperature Measured Degrees C Continuous Measurement	Temperature (7-DAD Max) Calculated Degrees C 1/Day Calculated
		001	001	001	001
1-M	**8/1/22**	2	7.3	22.8	23.2
1-T	**8/2/22**	1	7.1	22.4	23.0
1-W	**8/3/22**	1	6.9	22.7	23.1
1-Th	**8/4/22**		8.8	23.6	23.3
1-F	**8/5/22**		7.3	24.0	23.6
1-Sa	**8/6/22**		7.0	23.8	23.9
2-Su	**8/7/22**		7.1	23.9	23.3
2-M	**8/8/22**	3	7.2	24.0	23.5
2-T	**8/9/22**	1	7.3	24.1	23.7
2-W	**8/10/22**	1	7.2	23.8	23.9
2-Th	**8/11/22**		7.1	24.0	23.9
2-F	**8/12/22**		7.1	24.4	24.0
2-Sa	**8/13/22**		7.1	24.0	24.0
3-Su	**8/14/22**		7.1	24.3	24.1
3-M	**8/15/22**	1	7.1	24.4	24.1
3-T	**8/16/22**	2	7.1	24.8	24.2
3-W	**8/17/22**	1	7.0	24.8	24.4
3-Th	**8/18/22**		7.1	24.7	24.5
3-F	**8/19/22**		7.1	24.6	24.5
3-Sa	**8/20/22**		7.1	24.8	24.6
4-Su	**8/21/22**		7.0	24.7	24.7
4-M	**8/22/22**	1	7.0	24.8	24.7
4-T	**8/23/22**	1	7.0	24.5	24.7
4-W	**8/24/22**	2	7.1	24.8	24.7
4-Th	**8/25/22**		6.8	25.3	24.8
4-F	**8/26/22**		6.8	24.5	24.8
4-Sa	**8/27/22**		6.9	24.3	24.7
5-Su	**8/28/22**		7.0	24.3	24.6
5-M	**8/29/22**	1	7.1	24.3	24.6
5-T	**8/30/22**	2	7.0	24.4	24.6
5-W	**8/31/22**	1	7.1	24.9	24.6
Daily Minimum			6.8		
			>= 6.0 (RO)		
Average					
Weekly Average					
Maximum					24.8
					Report Only
Daily Maximum			8.8	25.3	
			<= 9.0 (RO)	Report Only	
Monthly geometric mean		1			
		<= 100			
Weekly Geometric Mean		2			
		<= 200			

I certify under penalty of law, that this document and all attachments were prepared under my direction or supervision in accordance with a system designed to assure that qualified personnel properly gather and evaluate the information submitted. Based on my inquiry of the person or persons who manage the system or those persons directly responsible for gathering information, the information submitted is, to the best of my knowledge and belief, true, accurate, and complete. I am aware that there are significant penalties for submitting false information, including the possibility of fine and imprisonment for knowing violations.

Donovan Sheppard	9/12/2022 10:52:37 AM
Signature	**Date**

Washington State Department of Ecology **Discharge Monitoring Report (DMR)**

Permit Number: WA0020486 **Permittee:** MONROE STP

Facility County: Snohomish **Receiving Waterbody:**

Monitoring Period: 09/01/2022 - 09/30/2022 **Outfall:** 001 **Version:** 1

Week	Monitoring Point	Total BOD5 Total Milligrams/L (mg/L) 3/Week Composite sample (24 hour)	BOD5 Calculated Calculated Lbs/Day 3/Week Calculated	Solids (Residue) Total suspended (TSS) Milligrams/L (mg/L) 3/Week Composite sample (24 hour)	Solids (Residue) Total suspended (TSS) Lbs/Day 3/Week Calculated	Flow Million Gallons/Day Continuous Metered/Recorded	Total BOD5 Total Milligrams/L (mg/L) 3/Week Composite sample (24 hour)	BOD5 Calculated Calculated Lbs/Day 3/Week Calculated	Total BOD5 Total Percent Monthly Calculated	Solids (Residue) Total suspended (TSS) Milligrams/L (mg/L) 3/Week Composite sample (24 hour)	Solids (Residue) Total suspended (TSS) Lbs/Day 3/Week Calculated	Solids (Residue) Total suspended (TSS) Percent Monthly Calculated
		IN1	IN1	IN1	IN1	001	001	001	001	001	001	001
1-Th	**9/1/22**	425	4959	322	3757	1.498	8	93	98	10	111	97
1-F	**9/2/22**					1.399						
1-Sa	**9/3/22**					1.375						
2-Su	**9/4/22**					1.318						
2-M	**9/5/22**	391	4536	378	4385	1.345	7	81	98	12	139	97
2-T	**9/6/22**	394	5235	372	4942	1.391	12	159	97	27	359	93
2-W	**9/7/22**	345	3971	274	3154	1.593	10	115	97	13	150	95
2-Th	**9/8/22**					1.380						
2-F	**9/9/22**					1.201						
2-Sa	**9/10/22**					1.347						
3-Su	**9/11/22**					1.286						
3-M	**9/12/22**	404	4663	328	3786	1.310	15	173	96	33	381	90
3-T	**9/13/22**	389	4227	266	2891	1.384	13	141	97	27	293	90
3-W	**9/14/22**	368	4229	274	3149	1.303	14	161	96	27	310	90
3-Th	**9/15/22**					1.378						
3-F	**9/16/22**					1.459						
3-Sa	**9/17/22**					1.444						
4-Su	**9/18/22**					1.335						
4-M	**9/19/22**	412	4890	346	4106	1.353	17	202	96	37	439	89
4-T	**9/20/22**	443	5139	338	3921	1.423	13	151	97	35	406	90
4-W	**9/21/22**	336	3668	256	2795	1.391	14	153	96	26	284	90
4-Th	**9/22/22**					1.309						
4-F	**9/23/22**					1.350						
4-Sa	**9/24/22**					1.337						
5-Su	**9/25/22**					1.251						
5-M	**9/26/22**	418	4835	322	3725	1.297	10	116	98	36	416	89
5-T	**9/27/22**	395	4398	408	4543	1.387	4	45	99	19	212	95
5-W	**9/28/22**	409	4629	376	4278	1.335	13	147	97	25	283	93
5-Th	**9/29/22**					1.357						
5-F	**9/30/22**					1.435						
Daily Minimum												
Average		395	4568	328	3802	1.366	12	134	97	25	291	92
		Report Only	DL: 6090	Report Only	DL: 5940	DL: 2.84	<= 30	<= 711	>= 85	<= 30	<= 711	>= 85
Weekly Average							15	169		33	376	
							<= 45	<= 1066		<= 45	<= 1066	
Maximum		443	5235	408	4942	1.593						
		Report Only	Report Only	Report Only	Report Only	Report Only						
Daily Maximum												
Monthly geometric mean												
Weekly Geometric Mean												

Week	Monitoring Point	Fecal Coliform #/100ml 3/Week Grab	pH Standard Units 1/Day Grab	Temperature Measured Degrees C Continuous Measurement	Temperature (7-DAD Max) Calculated Degrees C 1/Day Calculated
		001	001	001	001
1-Th	**9/1/22**		7.1	24.9	24.5
1-F	**9/2/22**		7.1	24.8	24.6
1-Sa	**9/3/22**		7.2	24.3	24.6
2-Su	**9/4/22**		7.3	24.1	24.5
2-M	**9/5/22**		7.3	24.0	24.5
2-T	**9/6/22**	2	7.1	23.9	24.4
2-W	**9/7/22**	4	7.1	24.0	24.3
2-Th	**9/8/22**	6	7.1	23.8	24.1
2-F	**9/9/22**		7.0	23.6	24.0
2-Sa	**9/10/22**		7.0	23.4	23.8
3-Su	**9/11/22**		7.0	23.3	23.7
3-M	**9/12/22**	3	7.0	23.5	23.6
3-T	**9/13/22**	3	7.0	23.4	23.6
3-W	**9/14/22**	3	7.0	23.5	23.5
3-Th	**9/15/22**		7.3	23.4	23.4
3-F	**9/16/22**		7.0	23.6	23.4
3-Sa	**9/17/22**		7.0	23.1	23.4
4-Su	**9/18/22**		6.9	23.0	23.4
4-M	**9/19/22**	2	7.1	23.0	23.3
4-T	**9/20/22**	2	6.9	22.9	23.2
4-W	**9/21/22**	3	7.0	22.8	23.1
4-Th	**9/22/22**		7.1	22.3	23.0
4-F	**9/23/22**		6.8	22.4	22.8
4-Sa	**9/24/22**		6.8	22.6	22.7
5-Su	**9/25/22**		6.9	22.6	22.7
5-M	**9/26/22**	3	7.0	22.9	22.6
5-T	**9/27/22**	1	7.0	23.0	22.7
5-W	**9/28/22**	1	7.0	22.8	22.7
5-Th	**9/29/22**		7.2	22.8	22.7
5-F	**9/30/22**		7.0	22.6	22.8
Daily Minimum			6.8		
			>= 6.0 (RO)		
Average					
Weekly Average					
Maximum					24.6
					Report Only
Daily Maximum			7.3	24.9	
			<= 9.0 (RO)	Report Only	
Monthly geometric mean		2			
		<= 100			
Weekly Geometric Mean		4			
		<= 200			

I certify under penalty of law, that this document and all attachments were prepared under my direction or supervision in accordance with a system designed to assure that qualified personnel properly gather and evaluate the information submitted. Based on my inquiry of the person or persons who manage the system or those persons directly responsible for gathering information, the information submitted is, to the best of my knowledge and belief, true, accurate, and complete. I am aware that there are significant penalties for submitting false information, including the possibility of fine and imprisonment for knowing violations.

Donovan Sheppard	10/13/2022 8:15:03 AM
Signature	**Date**

Washington State Department of Ecology **Discharge Monitoring Report (DMR)**

Permit Number: WA0020486 **Permittee:** MONROE STP

Facility County: Snohomish **Receiving Waterbody:**

Monitoring Period: 10/01/2022 - 10/31/2022 **Outfall:** 001 **Version:** 1

Week	Monitoring Point	Total BOD5 Total Milligrams/L (mg/L) 3/Week Composite sample (24 hour)	BOD5 Calculated Calculated Lbs/Day 3/Week Calculated	Solids (Residue) Total suspended (TSS) Milligrams/L (mg/L) 3/Week Composite sample (24 hour)	Solids (Residue) Total suspended (TSS) Lbs/Day 3/Week Calculated	Flow Million Gallons/Day Continuous Metered/Recorded	Total BOD5 Total Milligrams/L (mg/L) 3/Week Composite sample (24 hour)	BOD5 Calculated Calculated Lbs/Day 3/Week Calculated	Total BOD5 Total Percent Monthly Calculated	Solids (Residue) Total suspended (TSS) Milligrams/L (mg/L) 3/Week Composite sample (24 hour)	Solids (Residue) Total suspended (TSS) Lbs/Day 3/Week Calculated	Solids (Residue) Total suspended (TSS) Percent Monthly Calculated
		IN1	IN1	IN1	IN1	001	001	001	001	001	001	001
1-Sa	**10/1/22**					1.346						
2-Su	**10/2/22**					1.301						
2-M	**10/3/22**	420	4963	352	4160	1.343	9	106	98	29	343	92
2-T	**10/4/22**	467	5511	470	5547	1.417	5	59	98	16	189	97
2-W	**10/5/22**	432	4950	370	4240	1.415	10	115	98	17	195	95
2-Th	**10/6/22**					1.374						
2-F	**10/7/22**					1.378						
2-Sa	**10/8/22**					1.362						
3-Su	**10/9/22**					1.282						
3-M	**10/10/22**	460	5310	318	3671	1.326	20	231	96	41	473	87
3-T	**10/11/22**	390	4472	292	3349	1.384	13	149	97	26	298	91
3-W	**10/12/22**	457	5248	356	4088	1.375	18	207	96	41	471	88
3-Th	**10/13/22**					1.377						
3-F	**10/14/22**					1.341						
3-Sa	**10/15/22**					1.359						
4-Su	**10/16/22**					1.290						
4-M	**10/17/22**	342	4196	320	3926	1.336	10	123	97	19	233	94
4-T	**10/18/22**	391	4650	70	832	1.471	9	107	98	27	321	61
4-W	**10/19/22**	405	4533	80	895	1.426	10	112	98	15	168	81
4-Th	**10/20/22**					1.342						
4-F	**10/21/22**					1.335						
4-Sa	**10/22/22**					1.461						
5-Su	**10/23/22**					1.307						
5-M	**10/24/22**	350	4224	288	3476	1.384	11	133	97	19	229	93
5-T	**10/25/22**	358	4858	380	5156	1.447	20	271	94	39	529	90
5-W	**10/26/22**	255	3805	180	2686	1.627	11	164	96	19	283	89
5-Th	**10/27/22**					1.789						
5-F	**10/28/22**					1.537						
5-Sa	**10/29/22**					1.603						
6-Su	**10/30/22**					1.360						
6-M	**10/31/22**	247	3689	126	1882	1.557	11	164	96	40	597	68
Daily Minimum												
Average		383	4647	277	3377	1.403	12	149	97	27	333	87
		Report Only	DL: 6090	Report Only	DL: 5940	DL: 2.84	<= 30	<= 711	>= 85	<= 30	<= 711	>= 85
Weekly Average							17	196		36	414	
							<= 45	<= 1066		<= 45	<= 1066	
Maximum		467	5511	470	5547	1.789						
		Report Only	Report Only	Report Only	Report Only	Report Only						
Daily Maximum												
Monthly geometric mean												
Weekly Geometric Mean												

Week	Monitoring Point	Fecal Coliform #/100ml 3/Week Grab	pH Standard Units 1/Day Grab	Temperature Measured Degrees C Continuous Measurement	Temperature (7-DAD Max) Calculated Degrees C 1/Day Calculated
		001	001	001	001
1-Sa	**10/1/22**		7.0	22.6	24.2
2-Su	**10/2/22**		6.9	22.5	23.9
2-M	**10/3/22**	1	7.0	22.6	23.6
2-T	**10/4/22**	1	6.9	22.4	23.4
2-W	**10/5/22**	2	6.9	22.2	23.1
2-Th	**10/6/22**		7.0	22.3	22.8
2-F	**10/7/22**		6.8	22.1	22.4
2-Sa	**10/8/22**		6.9	22.1	22.3
3-Su	**10/9/22**		6.8	22.1	22.2
3-M	**10/10/22**	3	7.1	22.0	22.2
3-T	**10/11/22**	2	6.9	22.0	22.1
3-W	**10/12/22**	3	7.0	21.8	22.0
3-Th	**10/13/22**		6.8	21.6	22.0
3-F	**10/14/22**		7.0	21.4	21.9
3-Sa	**10/15/22**		7.0	21.3	21.7
4-Su	**10/16/22**		7.1	21.3	21.6
4-M	**10/17/22**	2	7.1	21.3	21.5
4-T	**10/18/22**	2	7.2	21.3	21.4
4-W	**10/19/22**	1	7.3	21.1	21.3
4-Th	**10/20/22**		7.1	20.9	21.2
4-F	**10/21/22**		7.1	20.8	21.1
4-Sa	**10/22/22**		7.1	20.7	21.1
5-Su	**10/23/22**		7.1	20.0	20.9
5-M	**10/24/22**	1	7.2	20.1	20.7
5-T	**10/25/22**	1	7.4	19.9	20.5
5-W	**10/26/22**	2	7.0	19.6	20.3
5-Th	**10/27/22**		7.0	18.9	20.0
5-F	**10/28/22**		7.0	18.9	19.7
5-Sa	**10/29/22**		7.0	19.1	19.5
6-Su	**10/30/22**		7.0	19.4	19.4
6-M	**10/31/22**	1	7.1	19.4	19.3
Daily Minimum			6.8		
			>= 6.0 (RO)		
Average					
Weekly Average					
Maximum					24.2
					Report Only
Daily Maximum			7.4	22.6	
			<= 9.0 (RO)	Report Only	
Monthly geometric mean		2			
		<= 100			
Weekly Geometric Mean		3			
		<= 200			

I certify under penalty of law, that this document and all attachments were prepared under my direction or supervision in accordance with a system designed to assure that qualified personnel properly gather and evaluate the information submitted. Based on my inquiry of the person or persons who manage the system or those persons directly responsible for gathering information, the information submitted is, to the best of my knowledge and belief, true, accurate, and complete. I am aware that there are significant penalties for submitting false information, including the possibility of fine and imprisonment for knowing violations.

Donovan Sheppard

Signature

11/14/2022 8:33:30 AM

Date

Washington State Department of Ecology **Discharge Monitoring Report (DMR)**

Permit Number: WA0020486 **Permittee:** MONROE STP

Facility County: Snohomish **Receiving Waterbody:**

Monitoring Period: 10/01/2022 - 12/31/2022 **Outfall:** 001 **Version:** 1

Week	Monitoring Point	Phosphorus Total Milligrams/L (mg/L) Quarterly Composite sample (24 hour)	Total Reactive Phosphorus Total Reactive Milligrams/L (mg/L) Quarterly Composite sample (24 hour)	Ammonia Total Milligrams/L (mg/L) Quarterly Composite sample (24 hour)	Nitrate + Nitrite Total Milligrams/L (mg/L) Quarterly Composite sample (24 hour)	TKN Total Milligrams/L (mg/L) Quarterly Composite sample (24 hour)
		001	001	001	001	001
2-W	**10/5/22**	4.68	4.7	0.188	7.02	1.95
Average		4.68	4.7	0.188	7.02	1.95
		Report Only	Report Only	Report Only	Report Only	Report Only

I certify under penalty of law, that this document and all attachments were prepared under my direction or supervision in accordance with a system designed to assure that qualified personnel properly gather and evaluate the information submitted. Based on my inquiry of the person or persons who manage the system or those persons directly responsible for gathering information, the information submitted is, to the best of my knowledge and belief, true, accurate, and complete. I am aware that there are significant penalties for submitting false information, including the possibility of fine and imprisonment for knowing violations.

Donovan Sheppard — **Signature**

12/12/2022 11:08:09 AM — **Date**

Washington State Department of Ecology **Discharge Monitoring Report (DMR)**

Permit Number: WA0020486 **Permittee:** MONROE STP

Facility County: Snohomish **Receiving Waterbody:**

Monitoring Period: 11/01/2022 - 11/30/2022 **Outfall:** 001 **Version:** 1

Week	Monitoring Point	Total BOD5 Total Milligrams/L (mg/L) 3/Week Composite sample (24 hour)	BOD5 Calculated Calculated Lbs/Day 3/Week Calculated	Solids (Residue) Total suspended (TSS) Milligrams/L (mg/L) 3/Week Composite sample (24 hour)	Solids (Residue) Total suspended (TSS) Lbs/Day 3/Week Calculated	Flow Million Gallons/Day Continuous Metered/Recorded	Total BOD5 Total Milligrams/L (mg/L) 3/Week Composite sample (24 hour)	BOD5 Calculated Calculated Lbs/Day 3/Week Calculated	Total BOD5 Total Percent Monthly Calculated	Solids (Residue) Total suspended (TSS) Milligrams/L (mg/L) 3/Week Composite sample (24 hour)	Solids (Residue) Total suspended (TSS) Lbs/Day 3/Week Calculated	Solids (Residue) Total suspended (TSS) Percent Monthly Calculated
		IN1	IN1	IN1	IN1	001	001	001	001	001	001	001
1-T	**11/1/22**	418	5323	284	3617	1.791	7	89	98	17	216	94
1-W	**11/2/22**	384	4493	350	4095	1.527	12	140	97	25	293	93
1-Th	**11/3/22**					1.403						
1-F	**11/4/22**					1.985						
1-Sa	**11/5/22**					1.935						
2-Su	**11/6/22**					1.509						
2-M	**11/7/22**	344	4929	210	3009	2.170	11	158	97	11	158	95
2-T	**11/8/22**	406	5367	264	3490	1.718	7	93	98	4	53	98
2-W	**11/9/22**	460	5540	308	3709	1.585	8	96	96	9	102	97
2-Th	**11/10/22**					1.444						
2-F	**11/11/22**					1.474						
2-Sa	**11/12/22**					1.410						
3-Su	**11/13/22**					1.375						
3-M	**11/14/22**	385	4662	350	4238	1.430	11	133	97	17	206	95
3-T	**11/15/22**	344	4157	266	3215	1.452	9	109	97	10	121	96
3-W	**11/16/22**	355	4104	376	4346	1.440	10	116	97	10	110	97
3-Th	**11/17/22**					1.386						
3-F	**11/18/22**					1.419						
3-Sa	**11/19/22**					1.407						
4-Su	**11/20/22**	350	4066	274	3183	1.348	5	58	99	1	12	100
4-M	**11/21/22**	320	3691	148	1707	1.393	9	104	97	6	69	96
4-T	**11/22/22**	320	5060	166	2625	1.383	8	127	98	1	16	99
4-W	**11/23/22**					1.896						
4-Th	**11/24/22**					1.522						
4-F	**11/25/22**					1.318						
4-Sa	**11/26/22**					1.883						
5-Su	**11/27/22**					1.530						
5-M	**11/28/22**	336	4414	326	4282	1.635	11	144	97	10	131	97
5-T	**11/29/22**	236	2763	190	2225	1.575	4	47	98	3	35	98
5-W	**11/30/22**	282	4128	192	2810	1.404	5	73	98	5	66	98
Daily Minimum												
Average		353	4478	265	3325	1.559	8	106	98	9	113	97
		Report Only	DL: 6090	Report Only	DL: 5940	DL: 2.84	<= 30	<= 711	>= 85	<= 30	<= 711	>= 85
Weekly Average							10	119		21	254	
							<= 45	<= 1066		<= 45	<= 1066	
Maximum		460	5540	376	4346	2.170						
		Report Only	Report Only	Report Only	Report Only	Report Only						
Daily Maximum												
Monthly geometric mean												
Weekly Geometric Mean												

Week	Monitoring Point	Fecal Coliform #/100ml 3/Week Grab	pH Standard Units 1/Day Grab	Temperature Measured Degrees C Continuous Measurement	Temperature (7-DAD Max) Calculated Degrees C 1/Day Calculated
		001	001	001	001
1-T	**11/1/22**	1	7.0	18.7	19.1
1-W	**11/2/22**	1	7.0	18.6	19.0
1-Th	**11/3/22**		7.2	18.6	18.9
1-F	**11/4/22**		7.3	18.2	18.9
1-Sa	**11/5/22**		7.1	17.3	18.6
2-Su	**11/6/22**		6.8	17.4	18.3
2-M	**11/7/22**	1	6.9	17.0	18.0
2-T	**11/8/22**	2	6.9	17.4	17.8
2-W	**11/9/22**	1	7.2	17.3	17.6
2-Th	**11/10/22**		7.2	17.3	17.4
2-F	**11/11/22**		6.9	17.3	17.3
2-Sa	**11/12/22**		7.2	17.2	17.2
3-Su	**11/13/22**		7.2	17.1	17.2
3-M	**11/14/22**	2	7.2	17.1	17.2
3-T	**11/15/22**	1	7.2	17.0	17.2
3-W	**11/16/22**	1	7.2	16.9	17.1
3-Th	**11/17/22**		6.7	16.5	17.0
3-F	**11/18/22**		7.2	16.4	16.9
3-Sa	**11/19/22**		7.2	16.2	16.7
4-Su	**11/20/22**		7.4	16.3	16.6
4-M	**11/21/22**	4	7.2	16.4	16.5
4-T	**11/22/22**	1	7.1	16.4	16.5
4-W	**11/23/22**	1	7.8	16.2	16.4
4-Th	**11/24/22**		7.2	16.6	16.4
4-F	**11/25/22**		7.5	16.7	16.4
4-Sa	**11/26/22**		7.4	15.8	16.3
5-Su	**11/27/22**		6.9	16.2	16.3
5-M	**11/28/22**	1	6.9	16.2	16.3
5-T	**11/29/22**	1	6.9	15.8	16.2
5-W	**11/30/22**	1	7.3	15.6	16.1
Daily Minimum			6.7		
			>= 6.0 (RO)		
Average					
Weekly Average					
Maximum					19.1
					Report Only
Daily Maximum			7.8	18.7	
			<= 9.0 (RO)	Report Only	
Monthly geometric mean		1			
		<= 100			
Weekly Geometric Mean		2			
		<= 200			

I certify under penalty of law, that this document and all attachments were prepared under my direction or supervision in accordance with a system designed to assure that qualified personnel properly gather and evaluate the information submitted. Based on my inquiry of the person or persons who manage the system or those persons directly responsible for gathering information, the information submitted is, to the best of my knowledge and belief, true, accurate, and complete. I am aware that there are significant penalties for submitting false information, including the possibility of fine and imprisonment for knowing violations.

Donovan Sheppard

Signature

12/12/2022 7:42:11 AM

Date

Washington State Department of Ecology **Discharge Monitoring Report (DMR)**

Permit Number: WA0020486 **Permittee:** MONROE STP

Facility County: Snohomish **Receiving Waterbody:**

Monitoring Period: 12/01/2022 - 12/31/2022 **Outfall:** 001 **Version:** 1

Week	Monitoring Point	Total BOD5 Total Milligrams/L (mg/L) 3/Week Composite sample (24 hour)	BOD5 Calculated Calculated Lbs/Day 3/Week Calculated	Solids (Residue) Total suspended (TSS) Milligrams/L (mg/L) 3/Week Composite sample (24 hour)	Solids (Residue) Total suspended (TSS) Lbs/Day 3/Week Calculated	Flow Million Gallons/Day Continuous Metered/Recorded	Total BOD5 Total Milligrams/L (mg/L) 3/Week Composite sample (24 hour)	BOD5 Calculated Calculated Lbs/Day 3/Week Calculated	Total BOD5 Total Percent Monthly Calculated	Solids (Residue) Total suspended (TSS) Milligrams/L (mg/L) 3/Week Composite sample (24 hour)	Solids (Residue) Total suspended (TSS) Lbs/Day 3/Week Calculated	Solids (Residue) Total suspended (TSS) Percent Monthly Calculated
		IN1	IN1	IN1	IN1	001	001	001	001	001	001	001
1-Th	**12/1/22**					1.755						
1-F	**12/2/22**					1.646						
1-Sa	**12/3/22**					1.529						
2-Su	**12/4/22**					1.588						
2-M	**12/5/22**	366	4771	192	2503	1.524	10	130	97	6	78	97
2-T	**12/6/22**	354	4700	248	3203	1.563	7	93	98	7	93	97
2-W	**12/7/22**	272	3788	290	4039	1.592	9	125	97	6	84	98
2-Th	**12/8/22**					1.670						
2-F	**12/9/22**					1.778						
2-Sa	**12/10/22**					1.952						
3-Su	**12/11/22**					2.164						
3-M	**12/12/22**	355	4989	256	3598	1.700	8	112	98	7	98	97
3-T	**12/13/22**	376	5184	262	3612	1.685	10	138	97	4	55	98
3-W	**12/14/22**	385	4958	324	4172	1.653	6	77	98	4	52	99
3-Th	**12/15/22**					1.544						
3-F	**12/16/22**					1.481						
3-Sa	**12/17/22**					1.485						
4-Su	**12/18/22**					1.460						
4-M	**12/19/22**					1.769						
4-T	**12/20/22**	320	4315	222	2994	1.587	8	108	98	9	121	96
4-W	**12/21/22**	253	3576	124	1753	1.617	4	57	98	5	71	96
4-Th	**12/22/22**	223	3573	114	1826	1.695	8	128	96	9	144	92
4-F	**12/23/22**					1.921						
4-Sa	**12/24/22**					1.491						
5-Su	**12/25/22**					2.301						
5-M	**12/26/22**					1.993						
5-T	**12/27/22**	327	9082	148	4110	2.271	11	305	97	11	305	93
5-W	**12/28/22**	288	5870	152	3098	3.330	9	183	97	3	61	98
5-Th	**12/29/22**	307	5180	204	3442	2.444	5	84	98	7	118	97
5-F	**12/30/22**					2.023						
5-Sa	**12/31/22**					2.121						
Daily Minimum												
Monthly Average (Min.)									97			96
									>= 85			>= 85
Average		319	4999	211	3203	1.807	8	129		7	107	
		Report Only	DL: 6090	Report Only	DL: 5940	DL: 2.84	<= 30	<= 711		<= 30	<= 711	
Weekly Average							9	97		8	161	
							<= 45	<= 1066		<= 45	<= 1066	
Maximum		385	9082	324	4172	3.330						
		Report Only	Report Only	Report Only	Report Only	Report Only						
Daily Maximum												
Monthly geometric mean												

Week	Monitoring Point	Fecal Coliform #/100ml 3/Week Grab	pH Standard Units 1/Day Grab	Temperature Measured Degrees C Continuous Measurement	Temperature (7-DAD Max) Calculated Degrees C 1/Day Calculated
		001	001	001	001
1-Th	**12/1/22**		7.2	15.0	15.9
1-F	**12/2/22**		7.2	14.6	15.6
1-Sa	**12/3/22**		7.1	14.5	15.4
2-Su	**12/4/22**		7.4	14.4	15.2
2-M	**12/5/22**		6.9	14.6	14.9
2-T	**12/6/22**	2	7.2	14.8	14.8
2-W	**12/7/22**	2	7.4	14.8	14.7
2-Th	**12/8/22**	2	7.5	14.4	14.6
2-F	**12/9/22**		7.5	15.2	14.7
2-Sa	**12/10/22**		7.3	14.0	14.6
3-Su	**12/11/22**		7.3	14.2	14.6
3-M	**12/12/22**	1	7.6	16.4	14.8
3-T	**12/13/22**	1	7.0	15.8	15.0
3-W	**12/14/22**	1	7.0	15.9	15.1
3-Th	**12/15/22**		7.0	15.6	15.3
3-F	**12/16/22**		7.2	15.8	15.4
3-Sa	**12/17/22**		7.0	13.5	15.3
4-Su	**12/18/22**		6.9	13.7	15.2
4-M	**12/19/22**	1	7.3	15.5	15.1
4-T	**12/20/22**	1	7.1	15.8	15.1
4-W	**12/21/22**	1	7.1	151.2	15.0
4-Th	**12/22/22**		7.1	13.5	14.7
4-F	**12/23/22**		7.2	13.6	14.4
4-Sa	**12/24/22**		7.2	12.6	14.3
5-Su	**12/25/22**		7.5	13.7	14.3
5-M	**12/26/22**		6.9	13.1	13.9
5-T	**12/27/22**	2	7.0	14.4	13.7
5-W	**12/28/22**	1	7.2	14.4	13.6
5-Th	**12/29/22**	1	7.0	13.9	13.7
5-F	**12/30/22**		7.3	13.9	13.7
5-Sa	**12/31/22**		7.1	14.2	13.9
Daily Minimum			6.9		
			>= 6.0 (RO)		
Monthly Average (Min.)					
Average					
Weekly Average					
Maximum					15.9
					Report Only
Daily Maximum			7.6	16.4	
			<= 9.0 (RO)	Report Only	
Monthly geometric mean		1			
		<= 100			

Weekly Geometric Mean											

I certify under penalty of law, that this document and all attachments were prepared under my direction or supervision in accordance with a system designed to assure that qualified personnel properly gather and evaluate the information submitted. Based on my inquiry of the person or persons who manage the system or those persons directly responsible for gathering information, the information submitted is, to the best of my knowledge and belief, true, accurate, and complete. I am aware that there are significant penalties for submitting false information, including the possibility of fine and imprisonment for knowing violations.

Donovan Sheppard
Signature

1/10/2023 9:08:07 AM
Date

Weekly Geometric Mean	2			
	<= 200			

Washington State Department of Ecology **Discharge Monitoring Report (DMR)**

Permit Number: WA0020486 **Permittee:** MONROE STP

Facility County: Snohomish **Receiving Waterbody:**

Monitoring Period: 01/01/2023 - 01/31/2023 **Outfall:** 001 **Version:** 1

Week	Monitoring Point	Total BOD5 Total Milligrams/L (mg/L) 3/Week Composite sample (24 hour)	BOD5 Calculated Calculated Lbs/Day 3/Week Calculated	Solids (Residue) Total suspended (TSS) Milligrams/L (mg/L) 3/Week Composite sample (24 hour)	Solids (Residue) Total suspended (TSS) Lbs/Day 3/Week Calculated	Flow Million Gallons/Day Continuous Metered/Recorded	Total BOD5 Total Milligrams/L (mg/L) 3/Week Composite sample (24 hour)	BOD5 Calculated Calculated Lbs/Day 3/Week Calculated	Total BOD5 Total Percent Monthly Calculated	Solids (Residue) Total suspended (TSS) Milligrams/L (mg/L) 3/Week Composite sample (24 hour)	Solids (Residue) Total suspended (TSS) Lbs/Day 3/Week Calculated	Solids (Residue) Total suspended (TSS) Percent Monthly Calculated
		IN1	IN1	IN1	IN1	001	001	001	001	001	001	001
1-Su	**1/1/23**					1.792						
1-M	**1/2/23**	266	4111	216	3338	1.654	8	124	97	4	62	98
1-T	**1/3/23**	476	6741	252	3569	1.853	4	57	99	3	42	99
1-W	**1/4/23**	280	3925	110	1542	1.698	6	84	98	3	42	97
1-Th	**1/5/23**					1.681						
1-F	**1/6/23**					1.687						
1-Sa	**1/7/23**					1.612						
2-Su	**1/8/23**					1.572						
2-M	**1/9/23**					1.678						
2-T	**1/10/23**	317	4550	228	3273	1.922	8	115	97	4	57	98
2-W	**1/11/23**	288	4215	208	3044	1.721	4	59	99	3	44	99
2-Th	**1/12/23**	222	4136	124	2310	1.755	5	93	98	5	93	96
2-F	**1/13/23**					2.234						
2-Sa	**1/14/23**					2.128						
3-Su	**1/15/23**					1.711						
3-M	**1/16/23**	282	4144	210	3086	1.997	7	103	98	4	59	98
3-T	**1/17/23**	328	4834	252	3714	1.762	4	59	99	3	44	99
3-W	**1/18/23**	337	6554	138	2684	1.767	7	136	98	9	175	93
3-Th	**1/19/23**					2.332						
3-F	**1/20/23**					1.754						
3-Sa	**1/21/23**					1.701						
4-Su	**1/22/23**					1.905						
4-M	**1/23/23**	268	3681	76	1044	1.760	5	69	98	4	55	95
4-T	**1/24/23**	264	3655	342	4735	1.647	6	83	98	5	69	99
4-W	**1/25/23**	258	3486	140	1892	1.660	7	95	97	6	81	96
4-Th	**1/26/23**					1.620						
4-F	**1/27/23**					1.818						
4-Sa	**1/28/23**					1.895						
5-Su	**1/29/23**					1.708						
5-M	**1/30/23**	442	5611	302	3833	1.720	9	114	98	6	76	98
5-T	**1/31/23**	365	4682	318	4079	1.522	5	64	99	4	51	99
Daily Minimum												
Monthly Average (Min.)									98			97
									>= 85			>= 85
Average		314	4595	208	3010	1.791	6	90		5	68	
		Report Only	DL: 6090	Report Only	DL: 5940	DL: 2.84	<= 30	<= 711		<= 30	<= 711	
Weekly Average							6	99		5	92	
							<= 45	<= 1066		<= 45	<= 1066	
Maximum		476	6741	342	4735	2.332						
		Report Only	Report Only	Report Only	Report Only	Report Only						
Daily Maximum												
Monthly geometric mean												

Week	Monitoring Point	Fecal Coliform #/100ml 3/Week Grab	pH Standard Units 1/Day Grab	Temperature Measured Degrees C Continuous Measurement	Temperature (7-DAD Max) Calculated Degrees C 1/Day Calculated
		001	001	001	001
1-Su	**1/1/23**		7.3	13.4	13.9
1-M	**1/2/23**		7.2	12.9	13.9
1-T	**1/3/23**	1	7.5	18.1	14.4
1-W	**1/4/23**	2	7.5	15.4	14.5
1-Th	**1/5/23**	1	7.3	15.8	14.8
1-F	**1/6/23**		7.2	15.6	15.1
1-Sa	**1/7/23**		7.2	15.9	15.3
2-Su	**1/8/23**		7.1	13.3	15.3
2-M	**1/9/23**	1	7.2	15.8	15.7
2-T	**1/10/23**	1	7.2	16.0	15.4
2-W	**1/11/23**	1	7.4	16.4	15.5
2-Th	**1/12/23**		7.2	16.6	15.7
2-F	**1/13/23**		7.1	15.3	15.6
2-Sa	**1/14/23**		7.0	15.5	15.6
3-Su	**1/15/23**		7.0	15.7	15.9
3-M	**1/16/23**		7.0	15.7	15.9
3-T	**1/17/23**	1	7.1	16.1	15.9
3-W	**1/18/23**	1	7.3	16.0	15.8
3-Th	**1/19/23**	2	7.1	15.3	15.7
3-F	**1/20/23**		7.2	15.8	15.7
3-Sa	**1/21/23**		7.0	13.3	15.4
4-Su	**1/22/23**		7.1	12.8	15.0
4-M	**1/23/23**	1	7.1	16.0	15.0
4-T	**1/24/23**	6	7.1	16.3	15.1
4-W	**1/25/23**	1	7.2	15.8	15.0
4-Th	**1/26/23**		7.2	15.9	15.1
4-F	**1/27/23**		7.0	13.4	14.8
4-Sa	**1/28/23**		7.4	15.3	15.1
5-Su	**1/29/23**		7.1	14.9	15.4
5-M	**1/30/23**	1	7.3	14.0	15.1
5-T	**1/31/23**	1	7.2	16.4	15.1
Daily Minimum			7.0		
			>= 6.7 (RO)		
Monthly Average (Min.)					
Average					
Weekly Average					
Maximum					15.9
					Report Only
Daily Maximum			7.5	18.1	
			<= 9.0 (RO)	Report Only	
Monthly geometric mean		1			
		<= 100			

Weekly Geometric Mean											

I certify under penalty of law, that this document and all attachments were prepared under my direction or supervision in accordance with a system designed to assure that qualified personnel properly gather and evaluate the information submitted. Based on my inquiry of the person or persons who manage the system or those persons directly responsible for gathering information, the information submitted is, to the best of my knowledge and belief, true, accurate, and complete. I am aware that there are significant penalties for submitting false information, including the possibility of fine and imprisonment for knowing violations.

Donovan Sheppard
Signature

2/13/2023 9:06:48 AM
Date

Weekly Geometric Mean	3			
	<= 200			

Washington State Department of Ecology **Discharge Monitoring Report (DMR)**

Permit Number: WA0020486 **Permittee:** MONROE STP

Facility County: Snohomish **Receiving Waterbody:**

Monitoring Period: 01/01/2023 - 03/31/2023 **Outfall:** 001 **Version:** 1

Week	Monitoring Point	Phosphorus Total Milligrams/L (mg/L) Quarterly Composite sample (24 hour)	Total Reactive Phosphorus Total Reactive Milligrams/L (mg/L) Quarterly Composite sample (24 hour)	Ammonia Total Milligrams/L (mg/L) Quarterly Composite sample (24 hour)	Nitrate + Nitrite Total Milligrams/L (mg/L) Quarterly Composite sample (24 hour)	TKN Total Milligrams/L (mg/L) Quarterly Composite sample (24 hour)
		001	001	001	001	001
1-T	**1/3/23**	2.62	1.9	0.422	9.84	2.90
Average		2.62	1.9	0.422	9.84	2.90
		Report Only	Report Only	Report Only	Report Only	Report Only

I certify under penalty of law, that this document and all attachments were prepared under my direction or supervision in accordance with a system designed to assure that qualified personnel properly gather and evaluate the information submitted. Based on my inquiry of the person or persons who manage the system or those persons directly responsible for gathering information, the information submitted is, to the best of my knowledge and belief, true, accurate, and complete. I am aware that there are significant penalties for submitting false information, including the possibility of fine and imprisonment for knowing violations.

Donovan Sheppard — **Signature**

1/17/2023 8:56:13 AM — **Date**

Washington State Department of Ecology **Discharge Monitoring Report (DMR)**

Permit Number: WA0020486 **Permittee:** MONROE STP

Facility County: Snohomish **Receiving Waterbody:**

Monitoring Period: 02/01/2023 - 02/28/2023 **Outfall:** 001 **Version:** 1

Week	Monitoring Point	Total BOD5 Total Milligrams/L (mg/L) 3/Week Composite sample (24 hour)	BOD5 Calculated Calculated Lbs/Day 3/Week Calculated	Solids (Residue) Total suspended (TSS) Milligrams/L (mg/L) 3/Week Composite sample (24 hour)	Solids (Residue) Total suspended (TSS) Lbs/Day 3/Week Calculated	Flow Million Gallons/Day Continuous Metered/Recorded	Total BOD5 Total Milligrams/L (mg/L) 3/Week Composite sample (24 hour)	BOD5 Calculated Calculated Lbs/Day 3/Week Calculated	Total BOD5 Total Percent Monthly Calculated	Solids (Residue) Total suspended (TSS) Milligrams/L (mg/L) 3/Week Composite sample (24 hour)	Solids (Residue) Total suspended (TSS) Lbs/Day 3/Week Calculated	Solids (Residue) Total suspended (TSS) Percent Monthly Calculated
		IN1	IN1	IN1	IN1	001	001	001	001	001	001	001
1-W	**2/1/23**	315	4090	234	3039	1.538	8	104	97	5	65	98
1-Th	**2/2/23**					1.557						
1-F	**2/3/23**					1.585						
1-Sa	**2/4/23**					1.680						
2-Su	**2/5/23**					1.545						
2-M	**2/6/23**	282	3864	192	2631	1.682	7	96	98	9	123	95
2-T	**2/7/23**	297	4030	200	2714	1.643	7	95	98	7	95	97
2-W	**2/8/23**	314	3931	226	2829	1.627	6	75	98	4	44	98
2-Th	**2/9/23**					1.501						
2-F	**2/10/23**					1.678						
2-Sa	**2/11/23**					1.488						
3-Su	**2/12/23**					1.566						
3-M	**2/13/23**					1.509						
3-T	**2/14/23**	323	4256	298	3927	1.717	5	66	98	8	105	97
3-W	**2/15/23**	319	4031	358	4523	1.580	4	51	99	4	51	99
3-Th	**2/16/23**	461	5602	312	3791	1.515	4	49	99	3	30	99
3-F	**2/17/23**					1.457						
3-Sa	**2/18/23**					1.643						
4-Su	**2/19/23**					1.546						
4-M	**2/20/23**	279	5170	246	4559	1.756	7	130	97	5	93	98
4-T	**2/21/23**	277	4248	228	3497	2.222	4	61	99	2	31	99
4-W	**2/22/23**	303	4420	276	4026	1.839	5	73	98	3	44	99
4-Th	**2/23/23**					1.749						
4-F	**2/24/23**					1.743						
4-Sa	**2/25/23**					1.643						
5-Su	**2/26/23**					1.548						
5-M	**2/27/23**	285	3896	238	3253	1.585	3	41	99	7	96	97
5-T	**2/28/23**	289	3905	310	4188	1.639	3	41	99	5	68	98
Daily Minimum												
Monthly Average (Min.)									98			98
									>= 85			>= 85
Average		312	4287	260	3581	1.635	5	73		5	70	
		Report Only	DL: 6090	Report Only	DL: 5940	DL: 2.84	<= 30	<= 711		<= 30	<= 711	
Weekly Average							7	89		7	87	
							<= 45	<= 1066		<= 45	<= 1066	
Maximum		461	5602	358	4559	2.222						
		Report Only	Report Only	Report Only	Report Only	Report Only						
Daily Maximum												
Monthly geometric mean												
Weekly Geometric Mean												

Week	Monitoring Point	Fecal Coliform #/100ml 3/Week Grab	pH Standard Units 1/Day Grab	Temperature Measured Degrees C Continuous Measurement	Temperature (7-DAD Max) Calculated Degrees C 1/Day Calculated
		001	001	001	001
1-W	**2/1/23**	2	7.2	16.0	15.1
1-Th	**2/2/23**		7.3	15.8	15.1
1-F	**2/3/23**		7.0	15.5	15.4
1-Sa	**2/4/23**		7.1	14.7	15.3
2-Su	**2/5/23**		7.1	14.7	15.3
2-M	**2/6/23**	3	7.0	14.3	15.3
2-T	**2/7/23**	2	7.0	15.6	15.2
2-W	**2/8/23**	3	6.9	15.3	15.1
2-Th	**2/9/23**		7.1	16.4	15.2
2-F	**2/10/23**		7.2	15.8	15.3
2-Sa	**2/11/23**		7.0	14.7	15.3
3-Su	**2/12/23**		7.2	14.4	15.2
3-M	**2/13/23**	2	7.2	14.5	15.2
3-T	**2/14/23**	2	7.1	14.4	15.1
3-W	**2/15/23**	1	7.0	15.2	15.1
3-Th	**2/16/23**		7.0	16.9	15.1
3-F	**2/17/23**		7.2	16.2	15.2
3-Sa	**2/18/23**		7.0	12.9	14.9
4-Su	**2/19/23**		7.0	13.4	14.8
4-M	**2/20/23**		6.8	13.4	14.6
4-T	**2/21/23**	4	6.9	13.3	14.5
4-W	**2/22/23**	5	7.0	14.2	14.3
4-Th	**2/23/23**	5	7.2	13.8	13.9
4-F	**2/24/23**		7.2	13.4	13.5
4-Sa	**2/25/23**		7.1	14.6	13.7
5-Su	**2/26/23**		6.9	14.5	13.9
5-M	**2/27/23**	7	7.0	14.9	14.1
5-T	**2/28/23**	2	7.1	15.2	14.4
Daily Minimum			6.8		
			>= 6.7 (RO)		
Monthly Average (Min.)					
Average					
Weekly Average					
Maximum					15.4
					Report Only
Daily Maximum			7.3	16.9	
			<= 9.0 (RO)	Report Only	
Monthly geometric mean		3			
		<= 100			
Weekly Geometric Mean		7			
		<= 200			

I certify under penalty of law, that this document and all attachments were prepared under my direction or supervision in accordance with a system designed to assure that qualified personnel properly gather and evaluate the information submitted. Based on my inquiry of the person or persons who manage the system or those persons directly responsible for gathering information, the information submitted is, to the best of my knowledge and belief, true, accurate, and complete. I am aware that there are significant penalties for submitting false information, including the possibility of fine and imprisonment for knowing violations.

Donovan Sheppard

Signature

3/13/2023 7:46:54 AM

Date

Washington State Department of Ecology **Discharge Monitoring Report (DMR)**

Permit Number: WA0020486 **Permittee:** MONROE STP

Facility County: Snohomish **Receiving Waterbody:**

Monitoring Period: 03/01/2023 - 03/31/2023 **Outfall:** 001 **Version:** 1

Week	Monitoring Point	Total BOD5 Total Milligrams/L (mg/L) 3/Week Composite sample (24 hour)	BOD5 Calculated Calculated Lbs/Day 3/Week Calculated	Solids (Residue) Total suspended (TSS) Milligrams/L (mg/L) 3/Week Composite sample (24 hour)	Solids (Residue) Total suspended (TSS) Lbs/Day 3/Week Calculated	Flow Million Gallons/Day Continuous Metered/Recorded	Total BOD5 Total Milligrams/L (mg/L) 3/Week Composite sample (24 hour)	BOD5 Calculated Calculated Lbs/Day 3/Week Calculated	Total BOD5 Total Percent Monthly Calculated	Solids (Residue) Total suspended (TSS) Milligrams/L (mg/L) 3/Week Composite sample (24 hour)	Solids (Residue) Total suspended (TSS) Lbs/Day 3/Week Calculated	Solids (Residue) Total suspended (TSS) Percent Monthly Calculated
		IN1	IN1	IN1	IN1	001	001	001	001	001	001	001
1-W	**3/1/23**	289	3690	242	3090	1.620	14	179	95	15	192	94
1-Th	**3/2/23**					1.531						
1-F	**3/3/23**					1.847						
1-Sa	**3/4/23**					1.669						
2-Su	**3/5/23**					1.821						
2-M	**3/6/23**	319	4374	274	3757	1.588	4	55	99	4	55	99
2-T	**3/7/23**	293	4254	256	3717	1.644	5	73	98	5	73	98
2-W	**3/8/23**	303	3924	306	3963	1.741	5	65	98	4	52	99
2-Th	**3/9/23**					1.553						
2-F	**3/10/23**					1.612						
2-Sa	**3/11/23**					1.567						
3-Su	**3/12/23**					1.538						
3-M	**3/13/23**	268	4683	238	4156	1.816	3	52	99	3	52	99
3-T	**3/14/23**	263	3727	200	2834	2.095	3	43	99	4	57	98
3-W	**3/15/23**	264	3763	260	3706	1.699	4	57	98	4	57	98
3-Th	**3/16/23**					1.709						
3-F	**3/17/23**					1.699						
3-Sa	**3/18/23**					1.542						
4-Su	**3/19/23**					1.566						
4-M	**3/20/23**	350	4632	230	3044	1.534	5	66	99	2	26	99
4-T	**3/21/23**	352	4271	296	3502	1.587	4	49	99	5	61	98
4-W	**3/22/23**	318	4302	258	3490	1.455	5	68	98	2	27	99
4-Th	**3/23/23**					1.622						
4-F	**3/24/23**					1.534						
4-Sa	**3/25/23**					1.580						
5-Su	**3/26/23**					1.459						
5-M	**3/27/23**	326	3991	334	4089	1.536	4	49	99	5	61	99
5-T	**3/28/23**	277	3682	286	3802	1.468	6	80	98	4	53	99
5-W	**3/29/23**	298	3860	322	4171	1.594	4	52	99	3	39	99
5-Th	**3/30/23**					1.553						
5-F	**3/31/23**					1.457						
Daily Minimum												
Monthly Average (Min.)									98			98
									>= 85			>= 85
Average		302	4089	269	3647	1.626	5	68		5	62	
		Report Only	DL: 6090	Report Only	DL: 5940	DL: 2.84	<= 30	<= 711		<= 30	<= 711	
Weekly Average							8	64		5	64	
							<= 45	<= 1066		<= 45	<= 1066	
Maximum		352	4683	334	4171	2.095						
		Report Only	Report Only	Report Only	Report Only	Report Only						
Daily Maximum												
Monthly geometric mean												

Week	Monitoring Point	Fecal Coliform #/100ml 3/Week Grab	pH Standard Units 1/Day Grab	Temperature Measured Degrees C Continuous Measurement	Temperature (7-DAD Max) Calculated Degrees C 1/Day Calculated
		001	001	001	001
1-W	**3/1/23**	1	7.0	14.1	14.4
1-Th	**3/2/23**		7.1	14.2	14.4
1-F	**3/3/23**		7.1	13.6	14.4
1-Sa	**3/4/23**		7.0	13.5	14.3
2-Su	**3/5/23**		7.1	13.6	14.1
2-M	**3/6/23**	7	7.1	13.9	14.0
2-T	**3/7/23**	3	7.3	14.2	13.9
2-W	**3/8/23**	2	7.0	14.2	13.9
2-Th	**3/9/23**		7.1	14.3	13.9
2-F	**3/10/23**		7.3	14.4	14.0
2-Sa	**3/11/23**		7.1	14.4	14.2
3-Su	**3/12/23**		7.1	14.4	14.3
3-M	**3/13/23**	8	6.9	14.3	14.3
3-T	**3/14/23**	1	7.1	14.4	14.4
3-W	**3/15/23**	1	7.3	14.3	14.4
3-Th	**3/16/23**		7.1	14.7	14.4
3-F	**3/17/23**		7.3	14.9	14.5
3-Sa	**3/18/23**		7.1	15.3	14.6
4-Su	**3/19/23**		7.2	15.3	14.7
4-M	**3/20/23**	1	7.1	15.5	14.9
4-T	**3/21/23**	1	7.2	15.8	15.1
4-W	**3/22/23**	1	7.5	16.0	15.3
4-Th	**3/23/23**		7.3	15.9	15.5
4-F	**3/24/23**		7.1	15.7	15.6
4-Sa	**3/25/23**		7.1	15.3	15.6
5-Su	**3/26/23**		7.1	15.3	15.6
5-M	**3/27/23**	3	7.2	15.5	15.6
5-T	**3/28/23**	1	7.2	15.6	15.6
5-W	**3/29/23**	1	7.1	16.0	15.6
5-Th	**3/30/23**		7.3	15.9	15.6
5-F	**3/31/23**		7.1	15.6	15.6
Daily Minimum			6.9		
			>= 6.7 (RO)		
Monthly Average (Min.)					
Average					
Weekly Average					
Maximum					15.6
					Report Only
Daily Maximum			7.5	16.0	
			<= 9.0 (RO)	Report Only	
Monthly geometric mean		2			
		<= 100			

Weekly Geometric Mean											

I certify under penalty of law, that this document and all attachments were prepared under my direction or supervision in accordance with a system designed to assure that qualified personnel properly gather and evaluate the information submitted. Based on my inquiry of the person or persons who manage the system or those persons directly responsible for gathering information, the information submitted is, to the best of my knowledge and belief, true, accurate, and complete. I am aware that there are significant penalties for submitting false information, including the possibility of fine and imprisonment for knowing violations.

Donovan Sheppard
Signature

4/10/2023 11:00:23 AM
Date

Weekly Geometric Mean	4			
	<= 200			

Washington State Department of Ecology **Discharge Monitoring Report (DMR)**

Permit Number: WA0020486 **Permittee:** MONROE STP

Facility County: Snohomish **Receiving Waterbody:**

Monitoring Period: 04/01/2023 - 04/30/2023 **Outfall:** 001 **Version:** 1

Week	Monitoring Point	Total BOD5 Total Milligrams/L (mg/L) 3/Week Composite sample (24 hour)	BOD5 Calculated Calculated Lbs/Day 3/Week Calculated	Solids (Residue) Total suspended (TSS) Milligrams/L (mg/L) 3/Week Composite sample (24 hour)	Solids (Residue) Total suspended (TSS) Lbs/Day 3/Week Calculated	Flow Million Gallons/Day Continuous Metered/Recorded	Total BOD5 Total Milligrams/L (mg/L) 3/Week Composite sample (24 hour)	BOD5 Calculated Calculated Lbs/Day 3/Week Calculated	Total BOD5 Total Percent Monthly Calculated	Solids (Residue) Total suspended (TSS) Milligrams/L (mg/L) 3/Week Composite sample (24 hour)	Solids (Residue) Total suspended (TSS) Lbs/Day 3/Week Calculated	Solids (Residue) Total suspended (TSS) Percent Monthly Calculated
		IN1	IN1	IN1	IN1	001	001	001	001	001	001	001
1-Sa	**4/1/23**					1.620						
2-Su	**4/2/23**					1.487						
2-M	**4/3/23**	284	4370	216	3324	1.780	5	77	98	3	46	99
2-T	**4/4/23**	326	4288	298	3919	1.845	4	53	99	3	39	99
2-W	**4/5/23**	376	3879	336	3466	1.577	5	52	99	5	52	99
2-Th	**4/6/23**					1.237						
2-F	**4/7/23**					1.763						
2-Sa	**4/8/23**					1.694						
3-Su	**4/9/23**					1.594						
3-M	**4/10/23**	277	4831	212	3697	1.975	5	87	98	5	87	98
3-T	**4/11/23**	303	5160	282	4803	2.091	5	85	98	2	34	99
3-W	**4/12/23**	252	3720	158	2332	2.042	4	59	98	3	44	98
3-Th	**4/13/23**					1.770						
3-F	**4/14/23**					1.745						
3-Sa	**4/15/23**					1.657						
4-Su	**4/16/23**					1.558						
4-M	**4/17/23**	338	4756	304	4277	1.703	4	56	99	4	56	99
4-T	**4/18/23**	352	4712	336	4498	1.687	5	67	99	3	40	99
4-W	**4/19/23**	324	4253	258	3387	1.605	4	53	99	4	53	98
4-Th	**4/20/23**					1.574						
4-F	**4/21/23**					1.598						
4-Sa	**4/22/23**					1.554						
5-Su	**4/23/23**					1.630						
5-M	**4/24/23**	344	5156	274	4106	1.719	5	75	99	3	45	99
5-T	**4/25/23**	350	5030	220	3082	1.797	4	56	99	2	28	99
5-W	**4/26/23**	363	5065	312	4353	1.680	4	56	99	3	42	99
5-Th	**4/27/23**					1.673						
5-F	**4/28/23**					1.608						
5-Sa	**4/29/23**					1.595						
6-Su	**4/30/23**					1.477						
Daily Minimum												
Monthly Average (Min.)									99			99
									>= 85			>= 85
Average		325	4602	267	3770	1.677	5	65		3	47	
		Report Only	DL: 6090	Report Only	DL: 5940	DL: 2.84	<= 30	<= 711		<= 30	<= 711	
Weekly Average							5	77		4	55	
							<= 45	<= 1066		<= 45	<= 1066	
Maximum		376	5160	336	4803	2.091						
		Report Only	Report Only	Report Only	Report Only	Report Only						
Daily Maximum												
Monthly geometric mean												

Week	Monitoring Point	Fecal Coliform #/100ml 3/Week Grab	pH Standard Units 1/Day Grab	Temperature Measured Degrees C Continuous Measurement	Temperature (7-DAD Max) Calculated Degrees C 1/Day Calculated
		001	001	001	001
1-Sa	**4/1/23**		6.9	15.5	15.6
2-Su	**4/2/23**		6.8	15.2	15.6
2-M	**4/3/23**	1	7.0	15.1	15.6
2-T	**4/4/23**	1	7.0	15.0	15.5
2-W	**4/5/23**	1	7.4	15.3	15.4
2-Th	**4/6/23**		7.3	15.7	15.3
2-F	**4/7/23**		7.2	15.6	15.3
2-Sa	**4/8/23**		7.1	15.6	15.3
3-Su	**4/9/23**		6.9	15.5	15.4
3-M	**4/10/23**	1	7.0	15.4	15.4
3-T	**4/11/23**	1	7.0	15.2	15.5
3-W	**4/12/23**	1	7.2	15.1	15.4
3-Th	**4/13/23**		7.2	15.3	15.4
3-F	**4/14/23**		7.2	15.9	15.4
3-Sa	**4/15/23**		7.1	15.7	15.4
4-Su	**4/16/23**		7.1	15.8	15.5
4-M	**4/17/23**	1	7.0	15.8	15.5
4-T	**4/18/23**	1	7.2	15.8	15.6
4-W	**4/19/23**	1	7.0	15.8	15.7
4-Th	**4/20/23**		7.1	15.6	15.8
4-F	**4/21/23**		6.9	15.7	15.7
4-Sa	**4/22/23**		6.9	16.0	15.8
5-Su	**4/23/23**		6.9	16.3	15.8
5-M	**4/24/23**	3	6.9	16.4	15.9
5-T	**4/25/23**	1	6.9	16.8	16.1
5-W	**4/26/23**	1	7.3	17.2	16.3
5-Th	**4/27/23**		7.8	17.8	16.6
5-F	**4/28/23**		8.0	18.2	17.0
5-Sa	**4/29/23**		8.0	18.5	17.3
6-Su	**4/30/23**		7.7	18.2	17.6
Daily Minimum			6.8		
			>= 6.7 (RO)		
Monthly Average (Min.)					
Average					
Weekly Average					
Maximum					17.8
					Report Only
Daily Maximum			8.0	18.5	
			<= 9.0 (RO)	Report Only	
Monthly geometric mean		1			
		<= 100			

Weekly Geometric Mean											

I certify under penalty of law, that this document and all attachments were prepared under my direction or supervision in accordance with a system designed to assure that qualified personnel properly gather and evaluate the information submitted. Based on my inquiry of the person or persons who manage the system or those persons directly responsible for gathering information, the information submitted is, to the best of my knowledge and belief, true, accurate, and complete. I am aware that there are significant penalties for submitting false information, including the possibility of fine and imprisonment for knowing violations.

Donovan Sheppard
Signature

5/10/2023 8:25:09 AM
Date

Weekly Geometric Mean	3			
	<= 200			

Washington State Department of Ecology Discharge Monitoring Report (DMR)

Permit Number: WA0020486 **Permittee:** MONROE STP

Facility County: Snohomish **Receiving Waterbody:**

Monitoring Period: 04/01/2023 - 06/30/2023 **Outfall:** 001 **Version:** 1

Week	Monitoring Point	Phosphorus Total Milligrams/L (mg/L) Quarterly Composite sample (24 hour)	Total Reactive Phosphorus Total Reactive Milligrams/L (mg/L) Quarterly Composite sample (24 hour)	Ammonia Total Milligrams/L (mg/L) Quarterly Composite sample (24 hour)	Nitrate + Nitrite Total Milligrams/L (mg/L) Quarterly Composite sample (24 hour)	TKN Total Milligrams/L (mg/L) Quarterly Composite sample (24 hour)
		001	001	001	001	001
2-M	**4/3/23**	2.89	2.6	0.103	11.7	2.6
Average		2.89	2.6	0.103	11.7	2.6
		Report Only	Report Only	Report Only	Report Only	Report Only

I certify under penalty of law, that this document and all attachments were prepared under my direction or supervision in accordance with a system designed to assure that qualified personnel properly gather and evaluate the information submitted. Based on my inquiry of the person or persons who manage the system or those persons directly responsible for gathering information, the information submitted is, to the best of my knowledge and belief, true, accurate, and complete. I am aware that there are significant penalties for submitting false information, including the possibility of fine and imprisonment for knowing violations.

Donovan Sheppard — **Signature**

4/24/2023 9:47:03 AM — **Date**

Washington State Department of Ecology **Discharge Monitoring Report (DMR)**

Permit Number: WA0020486 **Permittee:** MONROE STP

Facility County: Snohomish **Receiving Waterbody:**

Monitoring Period: 05/01/2023 - 05/31/2023 **Outfall:** 001 **Version:** 1

Week	Monitoring Point	Total BOD5 Total Milligrams/L (mg/L) 3/Week Composite sample (24 hour)	BOD5 Calculated Calculated Lbs/Day 3/Week Calculated	Solids (Residue) Total suspended (TSS) Milligrams/L (mg/L) 3/Week Composite sample (24 hour)	Solids (Residue) Total suspended (TSS) Lbs/Day 3/Week Calculated	Flow Million Gallons/Day Continuous Metered/Recorded	Total BOD5 Total Milligrams/L (mg/L) 3/Week Composite sample (24 hour)	BOD5 Calculated Calculated Lbs/Day 3/Week Calculated	Total BOD5 Total Percent Monthly Calculated	Solids (Residue) Total suspended (TSS) Milligrams/L (mg/L) 3/Week Composite sample (24 hour)	Solids (Residue) Total suspended (TSS) Lbs/Day 3/Week Calculated	Solids (Residue) Total suspended (TSS) Percent Monthly Calculated
		IN1	IN1	IN1	IN1	001	001	001	001	001	001	001
1-M	**5/1/23**	309	4110	192	2554	1.507	5	67	98	3	40	98
1-T	**5/2/23**	295	3833	266	3456	1.595	3	39	99	3	39	99
1-W	**5/3/23**	310	3912	250	3155	1.558	4	50	99	4	50	98
1-Th	**5/4/23**					1.513						
1-F	**5/5/23**					1.520						
1-Sa	**5/6/23**					1.713						
2-Su	**5/7/23**					1.599						
2-M	**5/8/23**	335	4386	242	3169	1.530	4	52	99	2	26	99
2-T	**5/9/23**	343	4394	314	4022	1.570	4	51	99	2	26	99
2-W	**5/10/23**	346	4409	312	3976	1.536	5	64	99	2	25	99
2-Th	**5/11/23**					1.528						
2-F	**5/12/23**					1.526						
2-Sa	**5/13/23**					1.462						
3-Su	**5/14/23**					1.424						
3-M	**5/15/23**	349	4643	232	3086	1.488	8	106	98	4	53	98
3-T	**5/16/23**	304	3854	198	2510	1.595	6	76	98	4	51	98
3-W	**5/17/23**	354	4305	330	4013	1.520	6	73	98	4	49	99
3-Th	**5/18/23**					1.458						
3-F	**5/19/23**					1.555						
3-Sa	**5/20/23**					1.476						
4-Su	**5/21/23**					1.430						
4-M	**5/22/23**					1.455						
4-T	**5/23/23**	352	4415	268	3362	1.505	6	75	98	4	50	99
4-W	**5/24/23**	295	3634	184	2267	1.504	5	62	98	2	25	99
4-Th	**5/25/23**	363	4350	254	3044	1.477	7	84	98	5	60	98
4-F	**5/26/23**					1.437						
4-Sa	**5/27/23**					1.461						
5-Su	**5/28/23**					1.325						
5-M	**5/29/23**	305	3599	182	2148	1.343	5	59	98	3	35	98
5-T	**5/30/23**	395	3686	156	1949	1.415	5	62	98	2	25	99
5-W	**5/31/23**	274	3407	166	2064	1.498	4	50	99	2	25	99
Daily Minimum												
Monthly Average (Min.)									98			99
									>= 85			>= 85
Average		322	4062	236	2985	1.501	8	65		3	39	
		Report Only	DL: 6090	Report Only	DL: 5940	DL: 2.84	<= 30	<= 711		<= 30	<= 711	
Weekly Average							7	85		4	51	
							<= 45	<= 1066		<= 45	<= 1066	
Maximum		363	4643	330	4022	1.713						
		Report Only	Report Only	Report Only	Report Only	Report Only						
Daily Maximum												
Monthly geometric mean												

Week	Monitoring Point	Fecal Coliform #/100ml 3/Week Grab	pH Standard Units 1/Day Grab	Temperature Measured Degrees C Continuous Measurement	Temperature (7-DAD Max) Calculated Degrees C 1/Day Calculated
		001	001	001	001
1-M	**5/1/23**	1	7.5	17.9	17.8
1-T	**5/2/23**	2	7.5	18.4	18.1
1-W	**5/3/23**	1	7.3	18.9	18.3
1-Th	**5/4/23**		7.3	18.6	18.4
1-F	**5/5/23**		7.2	18.3	18.4
1-Sa	**5/6/23**		7.1	18.0	18.3
2-Su	**5/7/23**		7.1	18.1	18.3
2-M	**5/8/23**	1	7.2	18.4	18.4
2-T	**5/9/23**	1	7.2	18.8	18.4
2-W	**5/10/23**	1	7.3	18.9	18.4
2-Th	**5/11/23**		7.2	20.2	18.7
2-F	**5/12/23**		7.3	19.7	18.9
2-Sa	**5/13/23**		7.3	19.9	19.1
3-Su	**5/14/23**		7.8	20.3	19.5
3-M	**5/15/23**	1	7.0	20.4	19.7
3-T	**5/16/23**	4	7.6	21.2	20.1
3-W	**5/17/23**	10	7.2	21.0	20.4
3-Th	**5/18/23**		7.0	21.2	20.5
3-F	**5/19/23**		7.3	21.5	20.8
3-Sa	**5/20/23**		7.2	21.5	21.0
4-Su	**5/21/23**		7.1	20.5	21.0
4-M	**5/22/23**	5	7.3	20.1	21.0
4-T	**5/23/23**	2	7.3	20.1	20.8
4-W	**5/24/23**	3	7.3	20.1	20.7
4-Th	**5/25/23**		7.2	20.8	20.7
4-F	**5/26/23**		7.2	21.0	20.6
4-Sa	**5/27/23**		7.1	20.7	20.5
5-Su	**5/28/23**		7.2	20.4	20.5
5-M	**5/29/23**		7.2	20.7	20.6
5-T	**5/30/23**	3	7.1	20.8	20.7
5-W	**5/31/23**	2	7.2	20.8	20.8
Daily Minimum			7.0		
			>= 6.7 (RO)		
Monthly Average (Min.)					
Average					
Weekly Average					
Maximum					21.0
					Report Only
Daily Maximum			7.8	21.5	
			<= 9.0 (RO)	Report Only	
Monthly geometric mean		2			
		<= 100			

Weekly Geometric Mean											

I certify under penalty of law, that this document and all attachments were prepared under my direction or supervision in accordance with a system designed to assure that qualified personnel properly gather and evaluate the information submitted. Based on my inquiry of the person or persons who manage the system or those persons directly responsible for gathering information, the information submitted is, to the best of my knowledge and belief, true, accurate, and complete. I am aware that there are significant penalties for submitting false information, including the possibility of fine and imprisonment for knowing violations.

Donovan Sheppard
Signature

6/12/2023 1:44:21 PM
Date

Weekly Geometric Mean	5			
	<= 200			

Washington State Department of Ecology **Discharge Monitoring Report (DMR)**

Permit Number: WA0020486 **Permittee:** MONROE STP

Facility County: Snohomish **Receiving Waterbody:**

Monitoring Period: 06/01/2023 - 06/30/2023 **Outfall:** 001 **Version:** 1

Week	Monitoring Point	Total BOD5 Total Milligrams/L (mg/L) 3/Week Composite sample (24 hour)	BOD5 Calculated Calculated Lbs/Day 3/Week Calculated	Solids (Residue) Total suspended (TSS) Milligrams/L (mg/L) 3/Week Composite sample (24 hour)	Solids (Residue) Total suspended (TSS) Lbs/Day 3/Week Calculated	Flow Million Gallons/Day Continuous Metered/Recorded	Total BOD5 Total Milligrams/L (mg/L) 3/Week Composite sample (24 hour)	BOD5 Calculated Calculated Lbs/Day 3/Week Calculated	Total BOD5 Total Percent Monthly Calculated	Solids (Residue) Total suspended (TSS) Milligrams/L (mg/L) 3/Week Composite sample (24 hour)	Solids (Residue) Total suspended (TSS) Lbs/Day 3/Week Calculated	Solids (Residue) Total suspended (TSS) Percent Monthly Calculated
		IN1	IN1	IN1	IN1	001	001	001	001	001	001	001
1-Th	**6/1/23**					1.491						
1-F	**6/2/23**					1.467						
1-Sa	**6/3/23**					1.458						
2-Su	**6/4/23**					1.413						
2-M	**6/5/23**	364	4636	268	3413	1.393	5	64	99	4	51	99
2-T	**6/6/23**	324	4007	246	3043	1.527	4	49	99	2	25	99
2-W	**6/7/23**	329	4017	212	2588	1.483	5	61	98	4	49	98
2-Th	**6/8/23**					1.464						
2-F	**6/9/23**					1.485						
2-Sa	**6/10/23**					1.455						
3-Su	**6/11/23**					1.530						
3-M	**6/12/23**					1.441						
3-T	**6/13/23**	393	4749	356	4302	1.498	7	85	98	5	60	99
3-W	**6/14/23**	299	3573	216	2581	1.449	6	72	98	4	48	98
3-Th	**6/15/23**	311	3815	280	3435	1.433	6	74	98	4	49	99
3-F	**6/16/23**					1.471						
3-Sa	**6/17/23**					1.481						
4-Su	**6/18/23**					1.393						
4-M	**6/19/23**	334	4226	314	3973	1.501	7	89	98	6	76	98
4-T	**6/20/23**	397	5387	474	6432	1.517	4	54	99	2	27	100
4-W	**6/21/23**	442	5574	468	5902	1.627	4	50	99	4	50	99
4-Th	**6/22/23**					1.512						
4-F	**6/23/23**					1.468						
4-Sa	**6/24/23**					1.470						
5-Su	**6/25/23**					1.362						
5-M	**6/26/23**	347	4266	310	3811	1.381	5	61	99	5	61	98
5-T	**6/27/23**	334	4059	242	2941	1.474	4	49	99	3	36	99
5-W	**6/28/23**	419	5008	406	4852	1.457	5	60	99	5	60	99
5-Th	**6/29/23**					1.433						
5-F	**6/30/23**					1.494						
Daily Minimum												
Monthly Average (Min.)									99			99
									>= 85			>= 85
Average		358	4443	316	3939	1.468	5	64		4	49	
		Report Only	DL: 6090	Report Only	DL: 5940	DL: 2.84	<= 30	<= 711		<= 30	<= 711	
Weekly Average							6	77		4	52	
							<= 45	<= 1066		<= 45	<= 1066	
Maximum		442	5574	474	6432	1.627						
		Report Only	Report Only	Report Only	Report Only	Report Only						
Daily Maximum												
Monthly geometric mean												

Week	Monitoring Point	Fecal Coliform #/100ml 3/Week Grab	pH Standard Units 1/Day Grab	Temperature Measured Degrees C Continuous Measurement	Temperature (7-DAD Max) Calculated Degrees C 1/Day Calculated
		001	001	001	001
1-Th	**6/1/23**	1	7.2	21.2	20.8
1-F	**6/2/23**		7.1	21.0	20.8
1-Sa	**6/3/23**		7.1	21.2	20.9
2-Su	**6/4/23**		7.0	21.2	21.0
2-M	**6/5/23**	1	6.9	21.2	21.1
2-T	**6/6/23**	1	7.0	21.6	21.2
2-W	**6/7/23**	1	7.0	21.7	21.3
2-Th	**6/8/23**		7.0	22.0	21.4
2-F	**6/9/23**		7.0	21.3	21.5
2-Sa	**6/10/23**		7.1	21.2	21.5
3-Su	**6/11/23**		7.1	21.1	21.4
3-M	**6/12/23**	1	7.4	21.8	21.5
3-T	**6/13/23**	2	7.5	21.7	21.5
3-W	**6/14/23**	2	7.6	21.6	21.5
3-Th	**6/15/23**		7.5	21.8	21.5
3-F	**6/16/23**		7.6	21.7	21.6
3-Sa	**6/17/23**		7.2	21.3	21.6
4-Su	**6/18/23**		7.2	21.1	21.6
4-M	**6/19/23**		7.2	20.9	21.4
4-T	**6/20/23**	1	7.3	20.5	21.3
4-W	**6/21/23**	1	7.4	20.9	21.2
4-Th	**6/22/23**	1	7.2	21.5	21.1
4-F	**6/23/23**		7.2	21.9	21.2
4-Sa	**6/24/23**		7.2	22.2	21.3
5-Su	**6/25/23**		7.2	22.2	21.5
5-M	**6/26/23**	1	7.3	22.4	21.7
5-T	**6/27/23**	1	7.3	22.7	22.0
5-W	**6/28/23**	1	7.3	23.1	22.3
5-Th	**6/29/23**		7.2	23.1	22.5
5-F	**6/30/23**		7.5	23.5	22.7
Daily Minimum			6.9		
			>= 6.7 (RO)		
Monthly Average (Min.)					
Average					
Weekly Average					
Maximum					22.8
					Report Only
Daily Maximum			7.6	23.5	
			<= 9.0 (RO)	Report Only	
Monthly geometric mean		1			
		<= 100			

Weekly Geometric Mean											

I certify under penalty of law, that this document and all attachments were prepared under my direction or supervision in accordance with a system designed to assure that qualified personnel properly gather and evaluate the information submitted. Based on my inquiry of the person or persons who manage the system or those persons directly responsible for gathering information, the information submitted is, to the best of my knowledge and belief, true, accurate, and complete. I am aware that there are significant penalties for submitting false information, including the possibility of fine and imprisonment for knowing violations.

Donovan Sheppard
Signature

7/11/2023 10:24:12 AM
Date

Weekly Geometric Mean	2			
	<= 200			

Washington State Department of Ecology **Discharge Monitoring Report (DMR)**

Permit Number: WA0020486 **Permittee:** MONROE STP

Facility County: Snohomish **Receiving Waterbody:**

Monitoring Period: 07/01/2023 - 07/31/2023 **Outfall:** 001 **Version:** 1

Week	Monitoring Point	Total BOD5 Total Milligrams/L (mg/L) 3/Week Composite sample (24 hour)	BOD5 Calculated Calculated Lbs/Day 3/Week Calculated	Solids (Residue) Total suspended (TSS) Milligrams/L (mg/L) 3/Week Composite sample (24 hour)	Solids (Residue) Total suspended (TSS) Lbs/Day 3/Week Calculated	Flow Million Gallons/Day Continuous Metered/Recorded	Total BOD5 Total Milligrams/L (mg/L) 3/Week Composite sample (24 hour)	BOD5 Calculated Calculated Lbs/Day 3/Week Calculated	Total BOD5 Total Percent Monthly Calculated	Solids (Residue) Total suspended (TSS) Milligrams/L (mg/L) 3/Week Composite sample (24 hour)	Solids (Residue) Total suspended (TSS) Lbs/Day 3/Week Calculated	Solids (Residue) Total suspended (TSS) Percent Monthly Calculated
		IN1	IN1	IN1	IN1	001	001	001	001	001	001	001
1-Sa	**7/1/23**					1.391						
2-Su	**7/2/23**					1.338						
2-M	**7/3/23**					1.302						
2-T	**7/4/23**	439	4873	420	4662	1.423	4	44	99	4	44	99
2-W	**7/5/23**	388	4640	390	4664	1.331	3	36	99	3	36	99
2-Th	**7/6/23**	368	4481	292	3556	1.434	4	49	99	4	49	99
2-F	**7/7/23**					1.460						
2-Sa	**7/8/23**					1.433						
3-Su	**7/9/23**					1.341						
3-M	**7/10/23**	347	4274	278	3424	1.419	4	49	99	4	49	99
3-T	**7/11/23**	337	3954	248	2910	1.477	4	47	99	3	35	99
3-W	**7/12/23**	354	4251	260	3122	1.407	4	48	99	4	48	98
3-Th	**7/13/23**					1.440						
3-F	**7/14/23**					1.434						
3-Sa	**7/15/23**					1.417						
4-Su	**7/16/23**					1.350						
4-M	**7/17/23**	364	4371	306	3675	1.406	6	72	98	4	48	99
4-T	**7/18/23**	322	3846	246	2938	1.440	5	60	98	1	12	100
4-W	**7/19/23**	269	3320	156	1926	1.432	4	49	99	2	25	99
4-Th	**7/20/23**					1.480						
4-F	**7/21/23**					1.398						
4-Sa	**7/22/23**					1.458						
5-Su	**7/23/23**					1.402						
5-M	**7/24/23**	317	4003	290	3662	1.382	7	88	98	2	25	98
5-T	**7/25/23**	316	3576	234	2648	1.514	7	79	98	4	45	98
5-W	**7/26/23**	270	3466	176	2259	1.357	5	64	98	9	116	95
5-Th	**7/27/23**					1.539						
5-F	**7/28/23**					1.407						
5-Sa	**7/29/23**					1.411						
6-Su	**7/30/23**					1.349						
6-M	**7/31/23**	361	4405	320	3904	1.340	12	146	97	10	122	97
Daily Minimum												
Monthly Average (Min.)									98			99
									>= 85			>= 85
Average		342	4112	278	3335	1.412	6	64		4	50	
		Report Only	DL: 6090	Report Only	DL: 5940	DL: 2.84	<= 30	<= 711		<= 30	<= 711	
Weekly Average							8	77		5	62	
							<= 45	<= 1066		<= 45	<= 1066	
Maximum		439	4873	420	4664	1.539						
		Report Only	Report Only	Report Only	Report Only	Report Only						
Daily Maximum												
Monthly geometric mean												

Week	Monitoring Point	Fecal Coliform #/100ml 3/Week Grab	pH Standard Units 1/Day Grab	Temperature Measured Degrees C Continuous Measurement	Temperature (7-DAD Max) Calculated Degrees C 1/Day Calculated
		001	001	001	001
1-Sa	**7/1/23**		6.9	23.3	22.9
2-Su	**7/2/23**		7.0	23.1	23.0
2-M	**7/3/23**	1	7.2	23.0	23.1
2-T	**7/4/23**		7.3	23.2	23.2
2-W	**7/5/23**	1	7.2	23.4	23.2
2-Th	**7/6/23**	1	7.2	23.7	23.3
2-F	**7/7/23**		7.1	23.9	23.4
2-Sa	**7/8/23**		7.2	23.7	23.4
3-Su	**7/9/23**		7.2	23.5	23.5
3-M	**7/10/23**	1	7.2	22.9	23.5
3-T	**7/11/23**	1	7.2	23.5	23.5
3-W	**7/12/23**	1	7.2	23.7	23.6
3-Th	**7/13/23**		7.4	23.9	23.6
3-F	**7/14/23**		7.2	23.9	23.6
3-Sa	**7/15/23**		6.9	24.0	23.6
4-Su	**7/16/23**		6.9	23.9	23.7
4-M	**7/17/23**	2	6.8	23.7	23.8
4-T	**7/18/23**	1	7.0	23.9	23.9
4-W	**7/19/23**	3	7.1	24.0	23.9
4-Th	**7/20/23**		7.0	24.3	24.0
4-F	**7/21/23**		7.2	24.3	24.0
4-Sa	**7/22/23**		7.3	24.4	24.1
5-Su	**7/23/23**		7.4	24.3	24.1
5-M	**7/24/23**	1	7.2	23.8	24.2
5-T	**7/25/23**	4	7.3	24.0	24.2
5-W	**7/26/23**	10	7.2	24.1	24.2
5-Th	**7/27/23**		7.2	24.1	24.1
5-F	**7/28/23**		7.2	24.1	24.1
5-Sa	**7/29/23**		7.2	24.3	24.1
6-Su	**7/30/23**		7.2	24.2	24.1
6-M	**7/31/23**	4	7.1	24.1	24.1
Daily Minimum			6.8		
			>= 6.7 (RO)		
Monthly Average (Min.)					
Average					
Weekly Average					
Maximum					24.2
					Report Only
Daily Maximum			7.4	24.4	
			<= 9.0 (RO)	Report Only	
Monthly geometric mean		2			
		<= 100			

Weekly Geometric Mean											

I certify under penalty of law, that this document and all attachments were prepared under my direction or supervision in accordance with a system designed to assure that qualified personnel properly gather and evaluate the information submitted. Based on my inquiry of the person or persons who manage the system or those persons directly responsible for gathering information, the information submitted is, to the best of my knowledge and belief, true, accurate, and complete. I am aware that there are significant penalties for submitting false information, including the possibility of fine and imprisonment for knowing violations.

Donovan Sheppard
Signature

8/14/2023 8:09:08 AM
Date

Weekly Geometric Mean	5			
	<= 200			

Washington State Department of Ecology — Discharge Monitoring Report (DMR)

Permit Number: WA0020486 **Permittee:** MONROE STP

Facility County: Snohomish **Receiving Waterbody:**

Monitoring Period: 07/01/2023 - 09/30/2023 **Outfall:** 001 **Version:** 1

Week	Monitoring Point	Phosphorus Total Milligrams/L (mg/L) Quarterly Composite sample (24 hour)	Total Reactive Phosphorus Total Reactive Milligrams/L (mg/L) Quarterly Composite sample (24 hour)	Ammonia Total Milligrams/L (mg/L) Quarterly Composite sample (24 hour)	Nitrate + Nitrite Total Milligrams/L (mg/L) Quarterly Composite sample (24 hour)	TKN Total Milligrams/L (mg/L) Quarterly Composite sample (24 hour)
		001	001	001	001	001
2-Th	**7/6/23**	5.05	5.0	0.101	11.2	4.08
Average		5.05	5.0	0.101	11.2	4.08
		Report Only	Report Only	Report Only	Report Only	Report Only

I certify under penalty of law, that this document and all attachments were prepared under my direction or supervision in accordance with a system designed to assure that qualified personnel properly gather and evaluate the information submitted. Based on my inquiry of the person or persons who manage the system or those persons directly responsible for gathering information, the information submitted is, to the best of my knowledge and belief, true, accurate, and complete. I am aware that there are significant penalties for submitting false information, including the possibility of fine and imprisonment for knowing violations.

Donovan Sheppard — **Signature**

8/10/2023 7:39:54 AM — **Date**

Washington State Department of Ecology **Discharge Monitoring Report (DMR)**

Permit Number: WA0020486 **Permittee:** MONROE STP

Facility County: Snohomish **Receiving Waterbody:**

Monitoring Period: 01/01/2023 - 12/31/2023 **Outfall:** 001 **Version:** 1

Sample Date: 8/10/2023

Monitoring Point	Parameter	Fraction	Units	Sample	Qualifier Code	Required Detection Level	Required Quantitation Level	Actual Detection Level	Actual Quantitation Level
001	2,4,6-Trichlorophenol		Micrograms/L (ug/L)	<0.2	U	2	4	0.1	0.11
001	2,4-Dichlorophenol		Micrograms/L (ug/L)	<0.2	U	0.5	1	0.2	0.23
001	2,4-Dimethylphenol		Micrograms/L (ug/L)	<0.2	U	0.5	1	0.2	0.23
001	2,4-Dinitrophenol		Micrograms/L (ug/L)	<0.6	U	1	2	0.5	0.57
001	2-Chlorophenol		Micrograms/L (ug/L)	<0.2	U	1	2	0.2	0.23
001	2-Nitrophenol		Micrograms/L (ug/L)	<0.2	U	0.5	1	0.2	0.23
001	4,6-Dinitro-2-Methylphenol (4,6 dinitro-o-cresol)(2-methyl-4,6-dinitrophenol)		Micrograms/L (ug/L)	<0.2	U	1	2	0.2	0.23
001	4-Chloro-3-Methylphenol (Parachlorometa cresol)		Micrograms/L (ug/L)	<0.2	U	1	2	0.2	0.23
001	4-Nitrophenol		Micrograms/L (ug/L)	<0.2	U	0.5	1	0.2	0.23
001	Pentachlorophenol		Micrograms/L (ug/L)	<0.2	U	0.5	1	0.2	0.23
001	Phenol		Micrograms/L (ug/L)	<0.2	U	2	4	0.2	0.23
001	Dimethyl phthalate		Micrograms/L (ug/L)	<0.1	U	1.6	6.4	0.1	0.11
001	Diethyl phthalate		Micrograms/L (ug/L)	<0.1	U	1.9	7.6	0.1	0.11
001	Dibutyl phthalate (Di-n-butyl phthalate)		Micrograms/L (ug/L)	<0.1	U	0.5	1	0.1	0.11
001	Hexachlorobenzene		Micrograms/L (ug/L)	<0.1	U	0.3	0.6	0.1	0.11
001	Fluorene		Micrograms/L (ug/L)	<0.1	U	0.3	0.6	0.1	0.11
001	Fluoranthene		Micrograms/L (ug/L)	<0.1	U	0.3	0.6	0.1	0.11
001	Dibenzo (a,j)acridine		Micrograms/L (ug/L)	<0.1	U	2.5	10	0.1	0.11
001	Dibenzo (a,h)acridine		Micrograms/L (ug/L)	<0.1	U	2.5	10	0.1	0.11
001	Di-N-Octyl Phthalate		Micrograms/L (ug/L)	<0.1	U	0.3	0.6	0.1	0.11
001	Dibenzo(a,h)pyrene		Micrograms/L (ug/L)	<1.7	U	2.5	10	1.49	1.7
001	Dibenzo(a,h)anthracene		Micrograms/L (ug/L)	<0.1	U	0.8	1.6	0.1	0.11
001	Dibenzo(a,e)pyrene		Micrograms/L (ug/L)	<0.1	U	2.5	10	0.1	0.11
001	Hexachlorobutadiene		Micrograms/L (ug/L)	<0.1	U	0.5	1	0.1	0.11
001	Nitrobenzene		Micrograms/L (ug/L)	<0.1	U	0.5	1	0.1	0.11
001	Naphthalene		Micrograms/L (ug/L)	<0.1	U	0.3	0.6	0.1	0.11
001	N-Nitrosodiphenylamine		Micrograms/L (ug/L)	<0.1	U	0.5	1	0.1	0.11
001	Pyrene		Micrograms/L (ug/L)	<0.1	U	0.3	0.6	0.1	0.11

001	Phenanthrene		Micrograms/L (ug/L)	<0.1	U	0.3	0.6	0.1	0.11
001	Perylene		Micrograms/L (ug/L)	<0.1	U	1.9	7.6	0.1	0.11
001	Indeno(1,2,3-cd)pyrene		Micrograms/L (ug/L)	<0.1	U	0.5	1	0.1	0.11
001	Hexachloroethane		Micrograms/L (ug/L)	<0.1	U	0.5	1	0.1	0.11
001	Hexachlorocyclopentadiene (hexachloropentadiene)		Micrograms/L (ug/L)	<0.2	U	0.5	1	0.2	0.23
001	N-Nitrosodimethylamine		Micrograms/L (ug/L)	<0.1	U	2	4	0.1	0.11
001	N-Nitrosodi-n-propylamine		Micrograms/L (ug/L)	<0.1	U	0.5	1	0.1	0.11
001	Isophorone		Micrograms/L (ug/L)	<0.1	U	0.5	1	0.1	0.11
001	Chrysene		Micrograms/L (ug/L)	<0.1	U	0.3	0.6	0.1	0.11
001	4-Chlorophenyl-Phenylether		Micrograms/L (ug/L)	<0.1	U	0.3	0.5	0.1	0.11
001	4-Bromophenyl phenyl ether		Micrograms/L (ug/L)	<0.1	U	0.2	0.4	0.1	0.11
001	3-Methyl cholanthrene (1,2-dihydro-3-methyl-Benz[j]aceanthrylene)		Micrograms/L (ug/L)	<0.1	U	2	8	0.1	0.11
001	Anthracene		Micrograms/L (ug/L)	<0.1	U	0.3	0.6	0.1	0.11
001	Acenaphthylene		Micrograms/L (ug/L)	<0.1	U	0.3	0.6	0.1	0.11
001	Acenaphthene		Micrograms/L (ug/L)	<0.1	U	0.2	0.4	0.1	0.11
001	2,4-Dinitrotoluene		Micrograms/L (ug/L)	<0.1	U	0.2	0.4	0.1	0.11
001	1,2-Diphenylhydrazine		Micrograms/L (ug/L)	<0.1	U	5	20	0.1	0.11
001	1,2,4-Trichlorobenzene		Micrograms/L (ug/L)	<0.1	U	0.3	0.6	0.1	0.11
001	3,3'-Dichlorobenzidine		Micrograms/L (ug/L)	<0.1	U	0.5	1	0.1	0.11
001	2-Chloronaphthalene		Micrograms/L (ug/L)	<0.1	U	0.3	0.6	0.1	0.11
001	2,6-Dinitrotoluene		Micrograms/L (ug/L)	<0.1	U	0.2	0.4	0.1	0.11
001	Benzo(j)fluoranthene		Micrograms/L (ug/L)	<0.1	U	0.5	1	0.1	0.11
001	Bis(2-Chloroethyl)Ether		Micrograms/L (ug/L)	<0.1	U	0.3	1	0.1	0.11
001	Bis(2-Chloroethoxy)Methane		Micrograms/L (ug/L)	<0.1	U	5.3	21.2	0.1	0.11
001	Benzo(a)anthracene		Micrograms/L (ug/L)	<0.1	U	0.3	0.6	0.1	0.11
001	Butyl benzyl phthalate (Benzyl butyl phthalate)		Micrograms/L (ug/L)	<0.1	U	0.3	0.6	0.1	0.11
001	Bis(2-Ethylhexyl) Phthalate		Micrograms/L (ug/L)	0.7		0.1	0.5	0.1	0.11
001	Bis(2-chloroisopropyl)ether		Micrograms/L (ug/L)	<0.1	U	5.7	17.1	0.1	0.11
001	Benzo(b)fluoranthene (3,4-Benzofluoranthene)		Micrograms/L (ug/L)	<0.1	U	0.8	1.6	0.1	0.11
001	Benzo(a)pyrene		Micrograms/L (ug/L)	<0.1	U	0.5	1	0.1	0.11
001	Benzidine		Micrograms/L (ug/L)	<0.5	U	12	24	0.4	0.46
001	Benzo(r,s,t)pentaphene (dibenzo(a,i) pyrene)		Micrograms/L (ug/L)	<0.1	U	0.5	1	0.1	0.11

001	Benzo(k)fluoranthene (11,12-benzofluoranthene)		Micrograms/L (ug/L)	<0.1	U	0.8	1.6	0.1	0.11
001	Benzo(ghi)perylene		Micrograms/L (ug/L)	<0.1	U	0.5	1	0.1	0.11
001	Dissolved Oxygen		Milligrams/L (mg/L)	3.0			0.2 mg/L	0.1	0.1
001	Oil & Grease		Milligrams/L (mg/L)	<5	U			2	5
001	Solids (Residue)	Total Dissolved Solids (TDS)	Milligrams/L (mg/L)	400			20 mg/L	1	5
001	Hardness, Total (As Caco3)	Total	Milligrams/L (mg/L)	230				0.01	1
001	Cyanide	Total	Micrograms/L (ug/L)	<1	U	5	10	2.02	5
001	Phenolics (Total Phenols)	Total	Micrograms/L (ug/L)	<30	U		50	30	28.2
001	Nickel	Total	Micrograms/L (ug/L)	1.97		0.1	0.5	0.176	0.2
001	Lead	Total	Micrograms/L (ug/L)	<0.2	U	0.1	0.5	0.181	0.2
001	Mercury	Total	Nanograms/L (ng/L)	<0.5	U	0.2 ng/L	0.5 ng/L	0.2	0.5
001	Thallium	Total	Micrograms/L (ug/L)	<0.1	U	0.09	0.36	0.0388	0.1
001	Zinc	Total	Micrograms/L (ug/L)	49.7		0.5	2.5	0.446	0.5
001	Selenium	Total	Micrograms/L (ug/L)	<1	U	1	1	0.694	1
001	Silver	Total	Micrograms/L (ug/L)	<0.2	U	0.04	0.2	0.173	0.2
001	Beryllium	Total	Micrograms/L (ug/L)	<0.3	U	0.1	0.5	0.0769	0.3
001	Cadmium	Total	Micrograms/L (ug/L)	<0.1	U	0.05	0.25	0.0336	0.1
001	Antimony	Total	Micrograms/L (ug/L)	0.5		0.3	1.0	0.162	0.3
001	Arsenic	Total	Micrograms/L (ug/L)	0.782		0.1	0.5	0.0881	0.1
001	Copper	Total	Micrograms/L (ug/L)	4.32		0.4	2	0.172	0.5
001	Chromium	Total	Micrograms/L (ug/L)	0.60		0.2	1	0.0946	0.5
001	Chromium, Hexavalent	Dissolved (soluble)	Micrograms/L (ug/L)	<1	U	0.3	1.2	0.74	1
001	1,1,1-Trichloroethane		Micrograms/L (ug/L)	<1	U	1	2	0.84	1
001	1,1,2,2-Tetrachloroethane		Micrograms/L (ug/L)	<1	U	1.9	2	0.632	1
001	1,1,2-Trichloroethane		Micrograms/L (ug/L)	<2	U	1	2	1.15	2
001	1,1-Dichloroethane		Micrograms/L (ug/L)	<1	U	1	2	0.397	1
001	1,1-Dichloroethene (1,1-dichloroethylene)		Micrograms/L (ug/L)	<1	U	1	2	0.745	1
001	1,2 Trans-Dichloroethylene OR Trans 1,2 Dichloroethene (Ethylene dichloride)		Micrograms/L (ug/L)	<1	U	1	2	0.501	1
001	1,2-Dichlorobenzene		Micrograms/L (ug/L)	<1	U	1.9	7.6	0.47	1
001	1,2-Dichloroethane		Micrograms/L (ug/L)	<1.5	U	1	2	1	1.5
001	1,2-Dichloropropane		Micrograms/L (ug/L)	<3	U	1	2	2	3
001	1,3-Dichlorobenzene		Micrograms/L (ug/L)	<1	U	1.9	7.6	0.75	1

001	1,3-Dichloropropene (1,3 Dichloropropylene)		Micrograms/L (ug/L)	<2	U	1	2	1.57	2
001	1,4-Dichlorobenzene		Micrograms/L (ug/L)	<1	U	4.4	17.6	0.722	1
001	2-Chloroethylvinylether		Micrograms/L (ug/L)	<1	U	1	2	0.487	1
001	Acrolein		Micrograms/L (ug/L)	<1.5	U	5	10	1	1.5
001	Acrylonitrile		Micrograms/L (ug/L)	<1	U	1	2	0.755	1
001	Benzene		Micrograms/L (ug/L)	<2	U	1	2	1	2
001	Bromoform		Micrograms/L (ug/L)	<2	U	1	2	1.19	2
001	Bromomethane (methyl bromide)		Micrograms/L (ug/L)	<2	U	5	10	1.25	2
001	Carbon Tetrachloride		Micrograms/L (ug/L)	<1	U	1	2	0.499	1
001	Chlorobenzene		Micrograms/L (ug/L)	<1	U	1	2	0.763	1
001	Chloroethane		Micrograms/L (ug/L)	<3	U	1	2	2	3
001	Chloroform		Micrograms/L (ug/L)	<1	U	1	2	0.778	1
001	Chloromethane (methyl chloride)		Micrograms/L (ug/L)	<2	U	1	2	1	2
001	Dibromochloromethane (chlorodibromomethane)		Micrograms/L (ug/L)	<1	U	1	2	0.77	1
001	Dichlorobromomethane		Micrograms/L (ug/L)	<3	U	1	2	2.61	3
001	Ethylbenzene		Micrograms/L (ug/L)	<1	U	1	2	0.413	1
001	Methylene Chloride		Micrograms/L (ug/L)	3.3		5	10	2.48	3
001	Tetrachloroethene (tetrachloroethylene)		Micrograms/L (ug/L)	<2	U	1	2	1.49	2
001	Toluene		Micrograms/L (ug/L)	<2	U	1	2	1.16	2
001	Trichloroethene (Trichloroethylene)		Micrograms/L (ug/L)	<2	U	1	2	1	2
001	Vinyl Chloride		Micrograms/L (ug/L)	<2	U	1	2	1	2

Reporting Codes Used: B - Below Detection Limit/No Detection

I certify under penalty of law, that this document and all attachments were prepared under my direction or supervision in accordance with a system designed to assure that qualified personnel properly gather and evaluate the information submitted. Based on my inquiry of the person or persons who manage the system or those persons directly responsible for gathering information, the information submitted is, to the best of my knowledge and belief, true, accurate, and complete. I am aware that there are significant penalties for submitting false information, including the possibility of fine and imprisonment for knowing violations.

Donovan Sheppard
Signature

11/7/2023 8:47:26 AM
Date

Washington State Department of Ecology **Discharge Monitoring Report (DMR)**

Permit Number: WA0020486 **Permittee:** MONROE STP

Facility County: Snohomish **Receiving Waterbody:**

Monitoring Period: 08/01/2023 - 08/31/2023 **Outfall:** 001 **Version:** 1

Week	Monitoring Point	Total BOD5 Total Milligrams/L (mg/L) 3/Week Composite sample (24 hour)	BOD5 Calculated Calculated Lbs/Day 3/Week Calculated	Solids (Residue) Total suspended (TSS) Milligrams/L (mg/L) 3/Week Composite sample (24 hour)	Solids (Residue) Total suspended (TSS) Lbs/Day 3/Week Calculated	Flow Million Gallons/Day Continuous Metered/Recorded	Total BOD5 Total Milligrams/L (mg/L) 3/Week Composite sample (24 hour)	BOD5 Calculated Calculated Lbs/Day 3/Week Calculated	Total BOD5 Total Percent Monthly Calculated	Solids (Residue) Total suspended (TSS) Milligrams/L (mg/L) 3/Week Composite sample (24 hour)	Solids (Residue) Total suspended (TSS) Lbs/Day 3/Week Calculated	Solids (Residue) Total suspended (TSS) Percent Monthly Calculated
		IN1	IN1	IN1	IN1	001	001	001	001	001	001	001
1-T	**8/1/23**	201	2399	128	1528	1.463	9	107	96	6	72	95
1-W	**8/2/23**	370	4305	364	4235	1.431	8	93	98	6	70	98
1-Th	**8/3/23**					1.395						
1-F	**8/4/23**					1.411						
1-Sa	**8/5/23**					1.404						
2-Su	**8/6/23**					1.321						
2-M	**8/7/23**	411	5011	386	4707	1.377	4	49	99	5	61	99
2-T	**8/8/23**	288	3435	194	2314	1.462	3	36	99	5	60	97
2-W	**8/9/23**	283	3330	354	4166	1.430	6	71	98	9	106	97
2-Th	**8/10/23**					1.411						
2-F	**8/11/23**					1.401						
2-Sa	**8/12/23**					1.421						
3-Su	**8/13/23**					1.360						
3-M	**8/14/23**	321	3850	234	2806	1.340	4	48	99	2	24	99
3-T	**8/15/23**	306	3614	284	3554	1.438	5	59	98	3	35	99
3-W	**8/16/23**	295	3447	228	2664	1.416	5	58	98	3	35	99
3-Th	**8/17/23**					1.401						
3-F	**8/18/23**					1.418						
3-Sa	**8/19/23**					1.388						
4-Su	**8/20/23**					1.357						
4-M	**8/21/23**	310	3723	200	2402	1.352	6	72	98	8	96	96
4-T	**8/22/23**	316	4116	318	4116	1.440	6	78	98	9	116	97
4-W	**8/23/23**	311	3831	248	3055	1.552	7	86	98	6	74	98
4-Th	**8/24/23**					1.477						
4-F	**8/25/23**					1.383						
4-Sa	**8/26/23**					1.453						
5-Su	**8/27/23**					1.381						
5-M	**8/28/23**					1.429						
5-T	**8/29/23**	380	4798	396	5000	1.522	4	51	99	4	51	99
5-W	**8/30/23**	381	4909	348	4484	1.514	7	90	98	4	52	99
5-Th	**8/31/23**	329	3990	256	3104	1.545	6	73	98	4	49	98
Daily Minimum												
Monthly Average (Min.)									98			98
									>= 85			>= 85
Average		322	3911	281	3424	1.418	6	69		5	64	
		Report Only	DL: 6090	Report Only	DL: 5940	DL: 2.84	<= 30	<= 711		<= 30	<= 711	
Weekly Average							6	79		8	96	
							<= 45	<= 1066		<= 45	<= 1066	
Maximum		411	5011	396	5000	1.552						
		Report Only	Report Only	Report Only	Report Only	Report Only						
Daily Maximum												
Monthly geometric mean												

Week	Monitoring Point	Fecal Coliform #/100ml 3/Week Grab	pH Standard Units 1/Day Grab	Temperature Measured Degrees C Continuous Measurement	Temperature (7-DAD Max) Calculated Degrees C 1/Day Calculated
		001	001	001	001
1-T	**8/1/23**	3	7.2	24.2	24.2
1-W	**8/2/23**	1	7.2	24.4	24.2
1-Th	**8/3/23**		7.2	24.4	24.3
1-F	**8/4/23**		7.2	24.5	24.3
1-Sa	**8/5/23**		7.3	24.0	24.2
2-Su	**8/6/23**		7.2	24.2	24.3
2-M	**8/7/23**	2	7.2	24.3	24.3
2-T	**8/8/23**	2	7.2	24.6	24.3
2-W	**8/9/23**	1	7.3	24.2	24.3
2-Th	**8/10/23**		7.2	24.1	24.3
2-F	**8/11/23**		7.3	24.4	24.2
2-Sa	**8/12/23**		7.1	24.6	24.3
3-Su	**8/13/23**		7.2	24.8	24.4
3-M	**8/14/23**	6	7.3	25.0	24.5
3-T	**8/15/23**	8	7.2	25.3	24.6
3-W	**8/16/23**	2	7.3	25.5	24.8
3-Th	**8/17/23**		7.2	25.5	25.0
3-F	**8/18/23**		7.1	25.4	25.1
3-Sa	**8/19/23**		6.9	25.1	25.2
4-Su	**8/20/23**		6.9	24.6	25.2
4-M	**8/21/23**	8	7.2	24.3	25.1
4-T	**8/22/23**	3	7.1	24.2	24.9
4-W	**8/23/23**	2	7.2	24.2	24.7
4-Th	**8/24/23**		7.2	24.4	24.6
4-F	**8/25/23**		7.2	24.1	24.4
4-Sa	**8/26/23**		7.1	24.3	24.3
5-Su	**8/27/23**		7.0	24.4	24.2
5-M	**8/28/23**	4	7.2	24.0	24.2
5-T	**8/29/23**	5	7.1	23.9	24.2
5-W	**8/30/23**	3	7.3	23.8	24.1
5-Th	**8/31/23**		7.1	23.7	24.0
Daily Minimum			6.9		
			>= 6.7 (RO)		
Monthly Average (Min.)					
Average					
Weekly Average					
Maximum					25.2
					Report Only
Daily Maximum			7.3	25.5	
			<= 9.0 (RO)	Report Only	
Monthly geometric mean		3			
		<= 100			

Weekly Geometric Mean											

I certify under penalty of law, that this document and all attachments were prepared under my direction or supervision in accordance with a system designed to assure that qualified personnel properly gather and evaluate the information submitted. Based on my inquiry of the person or persons who manage the system or those persons directly responsible for gathering information, the information submitted is, to the best of my knowledge and belief, true, accurate, and complete. I am aware that there are significant penalties for submitting false information, including the possibility of fine and imprisonment for knowing violations.

Donovan Sheppard
Signature

9/11/2023 2:12:48 PM
Date

Weekly Geometric Mean	5			
	<= 200			

Washington State Department of Ecology **Discharge Monitoring Report (DMR)**

Permit Number: WA0020486 **Permittee:** MONROE STP

Facility County: Snohomish **Receiving Waterbody:**

Monitoring Period: 09/01/2023 - 09/30/2023 **Outfall:** 001 **Version:** 1

Week	Monitoring Point	Total BOD5 Total Milligrams/L (mg/L) 3/Week Composite sample (24 hour)	BOD5 Calculated Calculated Lbs/Day 3/Week Calculated	Solids (Residue) Total suspended (TSS) Milligrams/L (mg/L) 3/Week Composite sample (24 hour)	Solids (Residue) Total suspended (TSS) Lbs/Day 3/Week Calculated	Flow Million Gallons/Day Continuous Metered/Recorded	Total BOD5 Total Milligrams/L (mg/L) 3/Week Composite sample (24 hour)	BOD5 Calculated Calculated Lbs/Day 3/Week Calculated	Total BOD5 Total Percent Monthly Calculated	Solids (Residue) Total suspended (TSS) Milligrams/L (mg/L) 3/Week Composite sample (24 hour)	Solids (Residue) Total suspended (TSS) Lbs/Day 3/Week Calculated	Solids (Residue) Total suspended (TSS) Percent Monthly Calculated
		IN1	IN1	IN1	IN1	001	001	001	001	001	001	001
1-F	**9/1/23**					1.454						
1-Sa	**9/2/23**					1.504						
2-Su	**9/3/23**					1.428						
2-M	**9/4/23**	415	5074	340	4157	1.391	5	61	99	10	122	97
2-T	**9/5/23**	349	4322	316	3914	1.466	5	62	99	11	136	97
2-W	**9/6/23**	374	4541	322	3910	1.485	7	85	98	10	121	97
2-Th	**9/7/23**					1.456						
2-F	**9/8/23**					1.418						
2-Sa	**9/9/23**					1.449						
3-Su	**9/10/23**					1.361						
3-M	**9/11/23**	346	4227	308	3763	1.407	6	73	98	5	61	98
3-T	**9/12/23**	326	3923	220	2648	1.465	5	60	98	3	36	99
3-W	**9/13/23**	352	4277	204	2479	1.443	7	85	98	3	36	99
3-Th	**9/14/23**					1.457						
3-F	**9/15/23**					1.412						
3-Sa	**9/16/23**					1.410						
4-Su	**9/17/23**					1.358						
4-M	**9/18/23**	330	3958	272	3262	1.392	8	96	98	7	84	97
4-T	**9/19/23**	306	3856	222	2798	1.438	7	88	98	9	113	96
4-W	**9/20/23**	323	3979	206	2538	1.511	6	74	98	6	74	97
4-Th	**9/21/23**					1.477						
4-F	**9/22/23**					1.445						
4-Sa	**9/23/23**					1.392						
5-Su	**9/24/23**					1.368						
5-M	**9/25/23**	302	4959	260	4270	1.683	13	213	96	10	164	98
5-T	**9/26/23**	340	4577	340	4577	1.969	7	94	98	5	67	99
5-W	**9/27/23**	197	3803	254	4904	1.614	8	154	96	7	135	97
5-Th	**9/28/23**					2.315						
5-F	**9/29/23**					2.002						
5-Sa	**9/30/23**					1.564						
Daily Minimum												
Monthly Average (Min.)									98			97
									>= 85			>= 85
Average		330	4291	272	3601	1.518	7	96		7	96	
		Report Only	DL: 6090	Report Only	DL: 5940	DL: 2.84	<= 30	<= 711		<= 30	<= 711	
Weekly Average							9	153		10	126	
							<= 45	<= 1066		<= 45	<= 1066	
Maximum		415	5074	340	4904	2.315						
		Report Only	Report Only	Report Only	Report Only	Report Only						
Daily Maximum												
Monthly geometric mean												

Week	Monitoring Point	Fecal Coliform #/100ml 3/Week Grab	pH Standard Units 1/Day Grab	Temperature Measured Degrees C Continuous Measurement	Temperature (7-DAD Max) Calculated Degrees C 1/Day Calculated
		001	001	001	001
1-F	**9/1/23**		7.2	24.0	24.1
1-Sa	**9/2/23**		7.2	24.3	24.1
2-Su	**9/3/23**		7.2	23.7	24.1
2-M	**9/4/23**		7.2	23.6	24.0
2-T	**9/5/23**	2	7.2	23.7	23.9
2-W	**9/6/23**	3	7.2	23.7	23.9
2-Th	**9/7/23**	2	7.2	23.8	23.8
2-F	**9/8/23**		7.2	23.7	23.8
2-Sa	**9/9/23**		7.2	23.8	23.7
3-Su	**9/10/23**		7.2	23.8	23.7
3-M	**9/11/23**	9	7.2	23.6	23.7
3-T	**9/12/23**	8	7.3	23.5	23.7
3-W	**9/13/23**	15	7.2	23.8	23.7
3-Th	**9/14/23**		7.2	23.8	23.7
3-F	**9/15/23**		7.3	23.8	23.7
3-Sa	**9/16/23**		7.0	23.8	23.7
4-Su	**9/17/23**		7.1	23.5	23.7
4-M	**9/18/23**	11	7.3	23.4	23.7
4-T	**9/19/23**	9	7.2	23.3	23.6
4-W	**9/20/23**	4	7.3	22.6	23.5
4-Th	**9/21/23**		7.0	22.6	23.3
4-F	**9/22/23**		7.2	22.8	23.2
4-Sa	**9/23/23**		7.3	22.6	23.0
5-Su	**9/24/23**		7.2	22.4	22.8
5-M	**9/25/23**	10	7.4	22.3	22.7
5-T	**9/26/23**	3	7.2	21.6	22.4
5-W	**9/27/23**	1	7.2	21.4	22.2
5-Th	**9/28/23**		7.4	20.6	21.9
5-F	**9/29/23**		7.3	20.8	21.7
5-Sa	**9/30/23**		7.2	21.0	21.4
Daily Minimum			7.0		
			>= 6.7 (RO)		
Monthly Average (Min.)					
Average					
Weekly Average					
Maximum					24.1
					Report Only
Daily Maximum			7.4	24.3	
			<= 9.0 (RO)	Report Only	
Monthly geometric mean		5			
		<= 100			

Weekly Geometric Mean											

I certify under penalty of law, that this document and all attachments were prepared under my direction or supervision in accordance with a system designed to assure that qualified personnel properly gather and evaluate the information submitted. Based on my inquiry of the person or persons who manage the system or those persons directly responsible for gathering information, the information submitted is, to the best of my knowledge and belief, true, accurate, and complete. I am aware that there are significant penalties for submitting false information, including the possibility of fine and imprisonment for knowing violations.

Donovan Sheppard
Signature

10/10/2023 12:35:49 PM
Date

Weekly Geometric Mean	16			
	<= 200			

Washington State Department of Ecology **Discharge Monitoring Report (DMR)**

Permit Number: WA0020486 **Permittee:** MONROE STP

Facility County: Snohomish **Receiving Waterbody:**

Monitoring Period: 10/01/2023 - 10/31/2023 **Outfall:** 001 **Version:** 1

Week	Monitoring Point	Total BOD5 Total Milligrams/L (mg/L) 3/Week Composite sample (24 hour)	BOD5 Calculated Calculated Lbs/Day 3/Week Calculated	Solids (Residue) Total suspended (TSS) Milligrams/L (mg/L) 3/Week Composite sample (24 hour)	Solids (Residue) Total suspended (TSS) Lbs/Day 3/Week Calculated	Flow Million Gallons/Day Continuous Metered/Recorded	Total BOD5 Total Milligrams/L (mg/L) 3/Week Composite sample (24 hour)	BOD5 Calculated Calculated Lbs/Day 3/Week Calculated	Total BOD5 Total Percent Monthly Calculated	Solids (Residue) Total suspended (TSS) Milligrams/L (mg/L) 3/Week Composite sample (24 hour)	Solids (Residue) Total suspended (TSS) Lbs/Day 3/Week Calculated	Solids (Residue) Total suspended (TSS) Percent Monthly Calculated
		IN1	IN1	IN1	IN1	001	001	001	001	001	001	001
1-Su	**10/1/23**					1.444						
1-M	**10/2/23**	287	4170	224	3254	1.449	6	87	98	5	73	98
1-T	**10/3/23**	301	3773	234	2933	1.742	8	100	97	5	63	98
1-W	**10/4/23**	324	3213	284	2816	1.503	7	69	98	3	30	99
1-Th	**10/5/23**					1.189						
1-F	**10/6/23**					1.206						
1-Sa	**10/7/23**					1.638						
2-Su	**10/8/23**					1.814						
2-M	**10/9/23**	391	4115	266	2800	1.823	6	63	98	4	42	98
2-T	**10/10/23**	361	3842	304	3235	1.262	5	53	99	2	21	99
2-W	**10/11/23**	297	4065	202	2765	1.276	5	68	98	2	27	99
2-Th	**10/12/23**					1.641						
2-F	**10/13/23**					1.577						
2-Sa	**10/14/23**					1.401						
3-Su	**10/15/23**					1.375						
3-M	**10/16/23**	318	4501	256	3623	1.408	7	99	98	7	99	97
3-T	**10/17/23**	376	4697	306	3823	1.697	4	50	99	9	112	97
3-W	**10/18/23**	364	4505	264	3267	1.498	4	50	99	8	99	97
3-Th	**10/19/23**					1.484						
3-F	**10/20/23**					1.457						
3-Sa	**10/21/23**					1.429						
4-Su	**10/22/23**					1.394						
4-M	**10/23/23**	277	3350	186	2249	1.405	5	60	98	3	36	98
4-T	**10/24/23**	192	2956	204	3141	1.450	4	62	98	3	46	99
4-W	**10/25/23**	323	4466	202	2793	1.846	4	55	99	3	41	99
4-Th	**10/26/23**					1.658						
4-F	**10/27/23**					1.448						
4-Sa	**10/28/23**					1.430						
5-Su	**10/29/23**					1.397						
5-M	**10/30/23**	214	2593	256	3102	1.381	5	61	98	5	61	98
5-T	**10/31/23**	345	3965	222	2551	1.453	3	34	99	6	69	97
Daily Minimum												
Monthly Average (Min.)									98			98
									>= 85			>= 85
Average		312	3872	244	3025	1.491	5	65		5	59	
		Report Only	DL: 6090	Report Only	DL: 5940	DL: 2.84	<= 30	<= 711		<= 30	<= 711	
Weekly Average							7	85		8	103	
							<= 45	<= 1066		<= 45	<= 1066	
Maximum		391	4697	306	3823	1.846						
		Report Only	Report Only	Report Only	Report Only	Report Only						
Daily Maximum												
Monthly geometric mean												

Week	Monitoring Point	Fecal Coliform #/100ml 3/Week Grab	pH Standard Units 1/Day Grab	Temperature Measured Degrees C Continuous Measurement	Temperature (7-DAD Max) Calculated Degrees C 1/Day Calculated
		001	001	001	001
1-Su	**10/1/23**		7.2	21.2	21.3
1-M	**10/2/23**	5	7.3	21.3	21.1
1-T	**10/3/23**	5	7.2	21.3	212.1
1-W	**10/4/23**	1	7.3	21.2	21.1
1-Th	**10/5/23**		7.2	21.7	21.2
1-F	**10/6/23**		7.2	22.2	21.4
1-Sa	**10/7/23**		6.9	21.9	21.6
2-Su	**10/8/23**		7.0	21.5	21.6
2-M	**10/9/23**	4	7.0	21.5	21.6
2-T	**10/10/23**	3	7.1	21.8	21.7
2-W	**10/11/23**	3	7.3	21.6	21.7
2-Th	**10/12/23**		7.3	21.3	21.7
2-F	**10/13/23**		7.1	21.2	21.5
2-Sa	**10/14/23**		7.2	21.2	21.4
3-Su	**10/15/23**		7.3	21.1	21.4
3-M	**10/16/23**	3	7.3	21.2	21.3
3-T	**10/17/23**	4	7.3	21.0	21.2
3-W	**10/18/23**	5	7.4	21.2	21.2
3-Th	**10/19/23**		7.2	21.2	21.2
3-F	**10/20/23**		7.0	21.2	21.2
3-Sa	**10/21/23**		7.2	21.2	21.2
4-Su	**10/22/23**		7.2	21.1	21.1
4-M	**10/23/23**	4	7.2	21.0	21.1
4-T	**10/24/23**	5	7.3	20.9	21.1
4-W	**10/25/23**	4	7.4	20.4	21.0
4-Th	**10/26/23**		7.3	19.3	20.7
4-F	**10/27/23**		7.1	19.3	20.4
4-Sa	**10/28/23**		7.1	19.1	20.2
5-Su	**10/29/23**		7.2	18.9	19.8
5-M	**10/30/23**	1	7.1	18.8	19.5
5-T	**10/31/23**	1	7.1	18.7	19.2
Daily Minimum			6.9		
			>= 6.7 (RO)		
Monthly Average (Min.)					
Average					
Weekly Average					
Maximum					21.7
					Report Only
Daily Maximum			7.4	22.2	
			<= 9.0 (RO)	Report Only	
Monthly geometric mean		3			
		<= 100			

Weekly Geometric Mean											

I certify under penalty of law, that this document and all attachments were prepared under my direction or supervision in accordance with a system designed to assure that qualified personnel properly gather and evaluate the information submitted. Based on my inquiry of the person or persons who manage the system or those persons directly responsible for gathering information, the information submitted is, to the best of my knowledge and belief, true, accurate, and complete. I am aware that there are significant penalties for submitting false information, including the possibility of fine and imprisonment for knowing violations.

Donovan Sheppard
Signature

11/8/2023 7:05:20 AM
Date

Weekly Geometric Mean	4			
	<= 200			

Washington State Department of Ecology **Discharge Monitoring Report (DMR)**

Permit Number: WA0020486 **Permittee:** MONROE STP

Facility County: Snohomish **Receiving Waterbody:**

Monitoring Period: 10/01/2023 - 12/31/2023 **Outfall:** 001 **Version:** 1

Week	Monitoring Point	Phosphorus Total Milligrams/L (mg/L) Quarterly Composite sample (24 hour)	Total Reactive Phosphorus Total Reactive Milligrams/L (mg/L) Quarterly Composite sample (24 hour)	Ammonia Total Milligrams/L (mg/L) Quarterly Composite sample (24 hour)	Nitrate + Nitrite Total Milligrams/L (mg/L) Quarterly Composite sample (24 hour)	TKN Total Milligrams/L (mg/L) Quarterly Composite sample (24 hour)
		001	001	001	001	001
1-T	**10/3/23**	4.32	3.7	0.163	8.69	3.73
Average		4.32	3.7	0.163	8.69	3.73
		Report Only	Report Only	Report Only	Report Only	Report Only

I certify under penalty of law, that this document and all attachments were prepared under my direction or supervision in accordance with a system designed to assure that qualified personnel properly gather and evaluate the information submitted. Based on my inquiry of the person or persons who manage the system or those persons directly responsible for gathering information, the information submitted is, to the best of my knowledge and belief, true, accurate, and complete. I am aware that there are significant penalties for submitting false information, including the possibility of fine and imprisonment for knowing violations.

Donovan Sheppard — **Signature**

10/23/2023 7:27:38 AM — **Date**

Washington State Department of Ecology **Discharge Monitoring Report (DMR)**

Permit Number: WA0020486 **Permittee:** MONROE STP

Facility County: Snohomish **Receiving Waterbody:**

Monitoring Period: 11/01/2023 - 11/30/2023 **Outfall:** 001 **Version:** 1

Week	Monitoring Point	Total BOD5 Total Milligrams/L (mg/L) 3/Week Composite sample (24 hour)	BOD5 Calculated Calculated Lbs/Day 3/Week Calculated	Solids (Residue) Total suspended (TSS) Milligrams/L (mg/L) 3/Week Composite sample (24 hour)	Solids (Residue) Total suspended (TSS) Lbs/Day 3/Week Calculated	Flow Million Gallons/Day Continuous Metered/Recorded	Total BOD5 Total Milligrams/L (mg/L) 3/Week Composite sample (24 hour)	BOD5 Calculated Calculated Lbs/Day 3/Week Calculated	Total BOD5 Total Percent Monthly Calculated	Solids (Residue) Total suspended (TSS) Milligrams/L (mg/L) 3/Week Composite sample (24 hour)	Solids (Residue) Total suspended (TSS) Lbs/Day 3/Week Calculated	Solids (Residue) Total suspended (TSS) Percent Monthly Calculated
		IN1	IN1	IN1	IN1	001	001	001	001	001	001	001
1-W	**11/1/23**	306	4208	222	3053	1.378	3	41	99	5	69	98
1-Th	**11/2/23**					1.649						
1-F	**11/3/23**					1.772						
1-Sa	**11/4/23**					1.707						
2-Su	**11/5/23**					2.170						
2-M	**11/6/23**	241	4096	188	3195	1.717	5	85	98	5	85	979
2-T	**11/7/23**	227	3949	162	2818	2.038	3	52	99	3	52	98
2-W	**11/8/23**	256	3627	176	2494	2.086	3	43	99	4	57	98
2-Th	**11/9/23**					1.699						
2-F	**11/10/23**					1.690						
2-Sa	**11/11/23**					1.573						
3-Su	**11/12/23**					1.705						
3-M	**11/13/23**	287	4155	292	4228	1.682	4	58	99	3	43	99
3-T	**11/14/23**	304	4148	322	4393	1.736	5	68	98	4	55	99
3-W	**11/15/23**	574	7353	332	4253	1.636	3	38	99	3	38	99
3-Th	**11/16/23**					1.536						
3-F	**11/17/23**					1.512						
3-Sa	**11/18/23**					1.519						
4-Su	**11/19/23**					1.727						
4-M	**11/20/23**	330	5526	238	3986	2.008	3	50	99	4	67	98
4-T	**11/21/23**	290	4329	152	2269	1.790	3	45	99	4	60	97
4-W	**11/22/23**	220	3237	166	2442	1.764	3	44	99	7	103	96
4-Th	**11/23/23**					1.697						
4-F	**11/24/23**					1.511						
4-Sa	**11/25/23**					1.450						
5-Su	**11/26/23**					1.470						
5-M	**11/27/23**	325	4250	248	3243	1.481	2	26	99	2	26	99
5-T	**11/28/23**	304	3811	282	3535	1.568	2	25	99	2	25	99
5-W	**11/29/23**	350	4300	292	3587	1.503	4	49	99	1	12	100
5-Th	**11/30/23**					1.473						
Daily Minimum												
Monthly Average (Min.)									99			98
									>= 85			>= 85
Average		309	4384	236	3346	1.675	3	48		4	53	
		Report Only	DL: 6090	Report Only	DL: 5940	DL: 2.84	<= 30	<= 711		<= 30	<= 711	
Weekly Average							4	74		5	76	
							<= 45	<= 1066		<= 45	<= 1066	
Maximum		574	7353	332	4393	2.170						
		Report Only	Report Only	Report Only	Report Only	Report Only						
Daily Maximum												
Monthly geometric mean												

Week	Monitoring Point	Fecal Coliform #/100ml 3/Week Grab	pH Standard Units 1/Day Grab	Temperature Measured Degrees C Continuous Measurement	Temperature (7-DAD Max) Calculated Degrees C 1/Day Calculated
		001	001	001	001
1-W	**11/1/23**	1	7.2	18.5	18.9
1-Th	**11/2/23**		7.0	18.4	18.8
1-F	**11/3/23**		7.2	18.5	18.7
1-Sa	**11/4/23**		7.1	18.6	18.6
2-Su	**11/5/23**		7.2	18.6	18.6
2-M	**11/6/23**	3	7.4	18.7	18.6
2-T	**11/7/23**	1	7.2	18.5	18.5
2-W	**11/8/23**	6	7.2	18.4	18.5
2-Th	**11/9/23**		7.1	18.9	18.6
2-F	**11/10/23**		7.1	17.2	18.4
2-Sa	**11/11/23**		7.0	17.6	18.3
3-Su	**11/12/23**		7.2	17.7	18.1
3-M	**11/13/23**	2	7.0	18.0	18.0
3-T	**11/14/23**	1	7.0	17.6	17.9
3-W	**11/15/23**	1	7.1	18.1	17.9
3-Th	**11/16/23**		7.1	18.8	17.9
3-F	**11/17/23**		7.1	18.9	18.1
3-Sa	**11/18/23**		7.1	15.8	17.8
4-Su	**11/19/23**		7.1	17.1	17.8
4-M	**11/20/23**		7.0	16.5	17.5
4-T	**11/21/23**	3	7.1	17.2	17.5
4-W	**11/22/23**	1	7.2	17.3	17.4
4-Th	**11/23/23**	1	7.1	16.7	17.1
4-F	**11/24/23**		7.1	16.6	16.7
4-Sa	**11/25/23**		7.0	16.6	16.9
5-Su	**11/26/23**		7.0	16.4	16.8
5-M	**11/27/23**	1	7.2	15.4	16.6
5-T	**11/28/23**	10	7.0	15.7	16.4
5-W	**11/29/23**	1	7.3	15.9	16.2
5-Th	**11/30/23**		7.4	16.2	16.1
Daily Minimum			7.0		
			>= 6.7 (RO)		
Monthly Average (Min.)					
Average					
Weekly Average					
Maximum					18.9
					Report Only
Daily Maximum			7.4	18.9	
			<= 9.0 (RO)	Report Only	
Monthly geometric mean		2			
		<= 100			

Weekly Geometric Mean											

I certify under penalty of law, that this document and all attachments were prepared under my direction or supervision in accordance with a system designed to assure that qualified personnel properly gather and evaluate the information submitted. Based on my inquiry of the person or persons who manage the system or those persons directly responsible for gathering information, the information submitted is, to the best of my knowledge and belief, true, accurate, and complete. I am aware that there are significant penalties for submitting false information, including the possibility of fine and imprisonment for knowing violations.

Donovan Sheppard
Signature

12/11/2023 10:23:27 AM
Date

Weekly Geometric Mean	7			
	<= 200			

Washington State Department of Ecology **Discharge Monitoring Report (DMR)**

Permit Number: WA0020486 **Permittee:** MONROE STP

Facility County: Snohomish **Receiving Waterbody:**

Monitoring Period: 12/01/2023 - 12/31/2023 **Outfall:** 001 **Version:** 2

Week	Monitoring Point	Total BOD5 Total Milligrams/L (mg/L) 3/Week Composite sample (24 hour)	BOD5 Calculated Calculated Lbs/Day 3/Week Calculated	Solids (Residue) Total suspended (TSS) Milligrams/L (mg/L) 3/Week Composite sample (24 hour)	Solids (Residue) Total suspended (TSS) Lbs/Day 3/Week Calculated	Flow Million Gallons/Day Continuous Metered/Recorded	Total BOD5 Total Milligrams/L (mg/L) 3/Week Composite sample (24 hour)	BOD5 Calculated Calculated Lbs/Day 3/Week Calculated	Total BOD5 Total Percent Monthly Calculated	Solids (Residue) Total suspended (TSS) Milligrams/L (mg/L) 3/Week Composite sample (24 hour)	Solids (Residue) Total suspended (TSS) Lbs/Day 3/Week Calculated	Solids (Residue) Total suspended (TSS) Percent Monthly Calculated
		IN1	IN1	IN1	IN1	001	001	001	001	001	001	001
1-F	**12/1/23**					1.513						
1-Sa	**12/2/23**					1.897						
2-Su	**12/3/23**					1.914						
2-M	**12/4/23**	142	3063	78	1682	1.848	9	194	94	8	173	90
2-T	**12/5/23**	213	6614	226	7017	2.566	6	186	97	6	186	97
2-W	**12/6/23**	214	5366	128	3222	3.723	4	101	98	3	76	98
2-Th	**12/7/23**					3.018						
2-F	**12/8/23**					3.072						
2-Sa	**12/9/23**					2.646						
3-Su	**12/10/23**					2.981						
3-M	**12/11/23**	368	7298	692	13724	2.735	4	79	99	5	99	99
3-T	**12/12/23**	282	5550	324	6377	2.376	3	59	99	3	59	99
3-W	**12/13/23**	382	5508	466	6720	2.360	4	58	99	4	58	99
3-Th	**12/14/23**					1.729						
3-F	**12/15/23**					2.276						
3-Sa	**12/16/23**					1.932						
4-Su	**12/17/23**					1.853						
4-M	**12/18/23**					1.667						
4-T	**12/19/23**	593	9975	618	10396	1.907	3	50	99	2	34	100
4-W	**12/20/23**	710	9717	1076	14753	2.017	3	41	100	3	41	100
4-Th	**12/21/23**	671	9782	2284	33297	1.641	9	131	99	3	44	100
4-F	**12/22/23**					1.748						
4-Sa	**12/23/23**					2.480						
5-Su	**12/24/23**					1.536						
5-M	**12/25/23**					1.748						
5-T	**12/26/23**	198	3015	152	2315	2.234	4	61	98	2	30	99
5-W	**12/27/23**	416	7067	218	3704	1.826	3	51	99	3	51	99
5-Th	**12/28/23**	333	5135	208	3207	2.037	3	46	99	2	31	99
5-F	**12/29/23**					1.849						
5-Sa	**12/30/23**					1.775						
6-Su	**12/31/23**					1.779						
Daily Minimum												
Monthly Average (Min.)									98			98
									>= 85			>= 85
Average		377	6509*	539	8868*	2.164	5	88		4	73	
		Report Only	DL: 6090	Report Only	DL: 5940	DL: 2.84	<= 30	<= 711		<= 30	<= 711	
Weekly Average							6	160		6	145	
							<= 45	<= 1066		<= 45	<= 1066	
Maximum		710	9975	2284	33297	3.723						
		Report Only	Report Only	Report Only	Report Only	Report Only						
Daily Maximum												
Monthly geometric mean												

Week	Monitoring Point	Fecal Coliform #/100ml 3/Week Grab	pH Standard Units 1/Day Grab	Temperature Measured Degrees C Continuous Measurement	Temperature (7-DAD Max) Calculated Degrees C 1/Day Calculated
		001	001	001	001
1-F	**12/1/23**		7.2	15.8	16.0
1-Sa	**12/2/23**		7.0	15.4	15.8
2-Su	**12/3/23**		7.1	15.2	15.7
2-M	**12/4/23**	1	7.0	15.5	15.7
2-T	**12/5/23**		6.8	15.4	15.6
2-W	**12/6/23**	1	7.3	14.8	15.5
2-Th	**12/7/23**	1	7.1	15.1	15.3
2-F	**12/8/23**		7.3	14.7	15.2
2-Sa	**12/9/23**		7.3	14.8	15.1
3-Su	**12/10/23**		7.2	14.6	15.0
3-M	**12/11/23**	3	7.0	14.8	14.9
3-T	**12/12/23**	2	7.2	15.4	14.9
3-W	**12/13/23**	1	7.2	15.3	15.0
3-Th	**12/14/23**		7.2	16.0	15.1
3-F	**12/15/23**		7.3	15.4	15.2
3-Sa	**12/16/23**		7.2	15.5	15.3
4-Su	**12/17/23**		7.1	15.5	15.4
4-M	**12/18/23**	1	7.2	15.9	15.6
4-T	**12/19/23**	1	7.1	15.7	15.6
4-W	**12/20/23**	1	7.3	15.3	15.6
4-Th	**12/21/23**		7.2	16.0	15.6
4-F	**12/22/23**		7.2	16.0	15.7
4-Sa	**12/23/23**		7.3	14.8	15.6
5-Su	**12/24/23**		7.4	15.3	15.6
5-M	**12/25/23**		7.4	15.1	15.5
5-T	**12/26/23**	1	7.0	14.5	15.3
5-W	**12/27/23**	2	7.0	14.8	15.2
5-Th	**12/28/23**	1	7.3	15.1	15.1
5-F	**12/29/23**		7.0	15.5	15.0
5-Sa	**12/30/23**		7.2	15.5	15.1
6-Su	**12/31/23**		7.2	15.5	15.1
Daily Minimum			6.8		
			>= 6.7 (RO)		
Monthly Average (Min.)					
Average					
Weekly Average					
Maximum					16.0
					Report Only
Daily Maximum			7.4	16.0	
			<= 9.0 (RO)	Report Only	
Monthly geometric mean		1			
		<= 100			

Weekly Geometric Mean											

Outfall: 001 -

Monitoring Point	Parameter	Sample Date/ Statistical Base	Value	Notes/Comment
IN1	Biochemical Oxygen Demand (BOD5) Calculated Lbs/Day	Average	6509	I believe the value was high due to a transducer issue we troubleshooting in one of the influent channels. This channel also sees recycle flows from the belt press and thickener which might have caused this high number.
IN1	Solids (Residue) Total suspended (TSS) Lbs/Day	Average	8868	I believe the value was high due to a transducer issue we troubleshooting in one of the influent channels. This channel also sees recycle flows from the belt press and thickener which might have caused this high number.

I certify under penalty of law, that this document and all attachments were prepared under my direction or supervision in accordance with a system designed to assure that qualified personnel properly gather and evaluate the information submitted. Based on my inquiry of the person or persons who manage the system or those persons directly responsible for gathering information, the information submitted is, to the best of my knowledge and belief, true, accurate, and complete. I am aware that there are significant penalties for submitting false information, including the possibility of fine and imprisonment for knowing violations.

Donovan Sheppard
Signature

1/16/2024 2:34:12 PM
Date

Weekly Geometric Mean	2			
	<= 200			

THIS PAGE INTENTIONALLY BLANK

Appendix SS-C

WWTP Process Capacity Evaluation

THIS PAGE INTENTIONALLY BLANK

Monroe WWTP							
Design / Plant	**Design**	**Projected**			**Metcalf and Eddy**		**DOE Orange Book**
Component		**Year 2024**	**Year 2030**	**Year 2044**	**Typical**	**Range**	**Range**
Flow, MGD							
Average Annual	2.20	1.71	1.84	2.12			
Maximum Month	2.84	2.26	2.44	2.81			
Maximum Day	4.55	3.59	3.88	4.46			
Peak Hour	9.94	4.48	4.83	5.55			
BOD_5, lbs/day (No Pretreatment in DOC Lagoon)							
Average Annual	4,710	4,845	5,217	5,975			
Maximum Month	6,090	5,878	6,325	7,219			
TSS, lbs/day (No pretreatment in DOC Lagoon)							
Average Annual	4,700	3,925	4,225	4,832			
Maximum Month	5,940	5,135	5,521	6,270			
Total Kjeldahl Nitrogen (TKN), lbs/day (2022 Engineering Report Concentrations Used)							
Average annual (43 mg/L)	789	612	661	760			
Maximum Month (47 mg/L)	1,113	886	956	1,100			
Screening							
Mechanical screens:							
Number, each	2						
Opening size, mm (in)	3 (1/8)						
Capacity, each, MGD	6.17						
Capacity, total, MGD	12.3	4.48	4.83	5.55	Manual screen backup also		
Manual screen:							
Number, each	1	(Allows PHF with one unit out of service)					
Opening size, mm (in)	9 (3/8)						
Influent Pumps							
Type	Submersible centrifugal pumps						
Large pumps:							
Number, each	2 + 1						
Capacity, each, MGD	4.0						
Small pumps:							
Number, each	2						
Capacity, each	1.0						
Total firm capacity , MGD	10.0	4.48	4.83	5.55			
Grit Removal							
Type	Mechanical vortex						
Number, each	1						
Diameter, feet	12.0						
Capacity, MGD	12.0	4.48	4.83	5.55			

Monroe WWTP							
Design / Plant	**Design**	**Projected**			**Metcalf and Eddy**		**DOE Orange Book**
Component		**Year 2024**	**Year 2030**	**Year 2044**	**Typical**	**Range**	**Range**
Primary Clarifiers							
Number, each	2				Tables 5-21		
Straight Length, feet	66				80-130	50-300	> 10
Width, feet	13				16-32	10-80	< 24
Side water depth, average, feet	10.0				14	10-16	8-14
Settling Area each, sq feet	858						
Volume/unit, gal	68,671						
Hydraulic Loading/unit, mgd							
@ design avg annual flow	1.10	0.85	0.92	1.06			
@ design max month flow	1.42	1.13	1.22	1.40			
@ peak hour flow	4.97	2.24	2.42	2.78			
Surface loading rate/unit, gpd/sf:					Table 5-20		
@ design avg annual flow	1,282	995	1,074	1,235	1200	800-1200	800-1200
@ design max month flow	1,655	1,318	1,422	1,635			
@ peak hour flow	5,793	2,609	2,815	3,237	2500	2000-3000	2000-3000
Detention Time/unit, hr							
@ design avg annual flow	1.50	1.93	1.79	1.56	2.0	1.5-2.5	
@ design max month flow	1.16	1.46	1.35	1.17			
@ peak hour flow	0.33	0.74	0.68	0.59			
Anoxic Tanks							
Number, each	3						
Length, feet	54						
Width, feet	15						
Side water depth, feet	16.33						
Total volume each, cubic feet	13,227						
Volume each, MG	0.10						
Total volume, MG	0.30	0.20	0.20	0.30			
Total Detention Time, hr							
@ design avg flow	3.2	4.2	3.9	3.4			
@ design max month flow	2.5	3.2	2.9	2.5	0.2 - 2.0		
@ peak flow	0.7	1.6	1.5	1.3			
Aeration Basins							
Number, each	3						
Length, feet	57						
Width, feet	54						
Side water depth, feet	16.33						
Total volume each, cubic feet	50,264						
Volume each, MG	0.376						
Total volume, MG	1.13	0.75	0.75	1.13			
Hydraulic loading/unit, MGD							
@ design avg annual flow	0.73	0.57	0.61	0.71			
@ design max month flow	0.95	0.75	0.81	0.94			
Total Detention Time, hr							
@ design avg flow	12.3	15.9	14.7	12.8	Table 8-19		
@ design max month flow	9.5	12.0	11.1	9.6		3 - 6	6 - 15
Max Month MLSS Conc, mg/L	3,500	3,100	3,300	2,718	2500	1500-4000	1500 - 3500
MLSS mass/basin, lbs	27,725	24,557	26,141	21,531			
MLVSS:MLSS ratio	0.80	0.85	0.85	0.85			
MLVSS mass/basin, lbs	22,180	20,750	22,089	18,258			
BOD loading/ basin, lbs	Assumes ~25% BOD removal in primary clarifiers based on 45% removal TSS						
@ design avg annual BOD	1,178	1,211	1,304	1,494			
@ design max month BOD	1,523	1,469	1,581	1,805			
F:M Ratio, max mo.	0.07	0.07	0.07	0.08		0.2 - 0.6	
Observed Sludge Yield, lbs/lb BOD	0.50	0.50	0.50	0.50	(Based on MOP 8 and Monod Curve @ 10+ days)		
SRT, days							
@ average annual BOD	35.9	37.1	34.4	30.0	(Assume avg. 10 mg/L effluent TSS)		
@ design max month BOD	27.8	12.0	12.0	12.0	10+ days	3-15 days	

Monroe WWTP

Design / Plant	Design	Projected			Metcalf and Eddy		DOE Orange Book
Component		Year 2024	Year 2030	Year 2044	Typical	Range	Range
Aeration Blowers							
Turbine Blowers							
Number, each	2 duty						
Capacity,each,cfm @8 psi	2,000						
Centrifugal Blowers							
Number, each	2 standby						
Capacity, cfm @8 psi	1,020						
Total firm capacity, cfm	4,040						
Oxygen required, lbs/ day @ max mo.	11,820	5,061	5,453	6,390	(Assume 1.1 lbs O2/lb BOD, 4.6 lb O2/lbNH4)		
SOTE, %	36%	36%	36%	36%	(Based on 2.5 scfm/sf flux rate)		
AOTE:SOTE ratio	0.44	0.44	0.44	0.44	(Based on β=0.95, α=0.6, DO=2 mg/L, T=16 C, sea level)		
Air required, cfm @ max mo.	2,983	1,034	1,124	1,398			
Secondary Clarifiers							
Number, each	2						
Number 1:							
Diameter, feet	47.0						
Side water depth, feet	12.0						
Settling area, each, sf	1,735						
Number 2:							
Diameter, feet	68.7						
Side water depth, feet	16.0						
Settling area, each, sf	3,703						
Total surface area, sf	5,438						
Surface loading rate/ gpd/sf	(Based on both clarifiers in service, no redundancy)				Table 8-34		
@ design avg flow	405	314	339	390			
@ design max month flow	522	416	449	516		600-800	
@ peak hour flow	1,828	823	888	1,021		1,200-1,600	
Solids loading rate/unit, lb/sf·h	(Both in service, 50% RAS [25% for PHF], no redundancy)						
@ design avg flow	0.74	0.57	0.62	0.71			
@ design max month flow	0.95	0.76	0.82	0.94		1.0 - 1.5	
@ peak hour flow	2.78	1.25	1.35	1.55	2.0		
Surface loading rate/ gpd/sf	(Largest out of service, Reliability Class II)				Table 8-34		
@ design avg flow	634	492	531	611			
@ design max month flow	818	652	703	808		600-800	
@ peak hour flow	2,865	1,290	1,392	1,601		1,200-1,600	
Solids loading rate/unit, lb/sf·h	(Largest out , Reliability Class II, 50% RAS [25% PHF])						
@ design avg flow	1.16	0.80	0.86	0.99	4.6		
@ design max month flow	1.49	1.05	1.14	1.31		1.0 - 1.5	
@ peak hour flow	4.36	1.74	1.87	2.16	2.0		
UV Disinfection							
Type	In-line medium pressure, high intensity UV						
Peak design flow, each, MGD	2.5						
Number of units	4 + 0						
Total firm capacity, MGD	10.0	4.48	4.83	5.55	(Appears to meet Reliability Class II @ 50%)		
Design transmittance, %	≥ 55						
Total suspended solids, mg/L	≤45						
UV Dose, mJ/cm2	25,000						
Effluent Pumps							
Type	Vertical turbine						
Number, each	2 + 1						
Capacity each, MGD:	5.0						
Total firm capacity , MGD	10.0	4.48	4.83	5.55			

Monroe WWTP

Design / Plant	Design	Projected			Metcalf and Eddy		DOE Orange Book
Component		Year 2024	Year 2030	Year 2044	Typical	Range	Range
Primary Sludge Production	(Based on 45% TSS removal)						
Primary sludge, lbs/day							
@ design avg	2,115	1,766	1,901	2,175			
@ design max month	2,673	2,311	2,484	2,822			
Primary sludge concentration	3.0%						
Primary sludge , gpd							
@ design avg	8,453	7,059	7,599	8,691			
@ design max month	10,683	9,236	9,929	11,277			
Secondary Sludge (WAS) Production							
Secondary sludge, lbs/day							
@ design avg	2,355	2,423	2,609	2,987			
@ design max month	3,045	2,457	2,649	3,095			
Secondary sludge concentration	1.0%						
Secondary sludge , gpd							
@ design avg	28,237	29,048	31,280	35,821			
@ design max month	36,511	29,456	31,763	37,110			
Rotary Disk WAS Thickening							
Number	1						
Hydraulic Capacity, gpm	100						
Hours/week of Operation @ max mo.	43	42	45	51			
Solids Capacity, lbs/hr	500						
Loading at max mo., lbs/hr	496	409	412	425			
Loading at max mo., gpm	99	82	82	85			
Thickened Secondary Sludge							
Thickened WAS concentration	4.5%	4.5%	4.5%	4.5%		4-6%	
Thickened WAS, gpd							
@ design avg	6,275	6,455	6,951	7,960			
@ design max month	8,114	6,546	7,058	8,247			
Total Sludge, gpd							
@ design avg	14,728	13,514	14,550	16,651			
@ design max month	18,797	15,782	16,988	19,524			
Aerobic Digesters							
Number, each	3						
Volume, total, cf	32,100						
Volume, total, gallons	240,108						
Retention time, days							
@ design avg	16.3	17.8	16.5	14.4	Current secondary SRT ~18 days		
@ design max month	12.8	15.2	14.1	12.3	42 d @ 15 C, 28 d @ 20 C		10 - 15
Volatile solids loading, lbs/cf/day	Assumes 85% volatile						
@ design avg	0.12	0.11	0.12	0.14			
@ design max month	0.15	0.13	0.14	0.16		0.1 - 0.3	0.1 - 0.3
Assumed VSS destruction	40%	25%	25%	25%			
VSS destruction, lbs/day							
@ design avg	1,520	890	958	1,097			
@ design max month	1,944	1,013	1,091	1,257			
Total solids from digester, dry lbs/day							
@ design avg	2,950	3,299	3,552	4,065			
@ design max month	3,774	3,754	4,042	4,659			
Digested sludge concentration	1.3%						
Digested sludge volume, gpd							
@ design avg	27,211	30,424	32,758	37,494			
@ design max month	34,808	34,628	37,285	42,975			

Monroe WWTP							
Design / Plant	**Design**	**Projected**			**Metcalf and Eddy**		**DOE Orange Book**
Component		**Year 2024**	**Year 2030**	**Year 2044**	**Typical**	**Range**	**Range**
Digester Blowers							
Primary Digester No. 1 Blower	1						
Capacity, cfm	1,380						
Pri. Dig. No. 2 & Sec. Digester Blower	2						
Capacity, cfm	1,000						
Total capacity, cfm	3,380						
Total firm capacity, cfm	2,000						
Oxygen required, lbs/ day @ max mo.	3,402	1,773	1,909	2,200		1.6-1.9	
SOTE, %	12.4%	12.4%	12.4%	12.4%	(Based on 0.825%/ft per Tideflex)		
AOTE:SOTE ratio	0.40	0.40	0.40	0.40	(Based on β=1, α=0.45, DO=1 mg/L, T=25 C, sea level)		
Air required, cfm @ max mo.	2,711	1,412	1,521	1,753	(Excludes O2 for nit. & recovered for denit.)		
Belt Filter Press Dewatering							
Number each	1						
Hydraulic capacity, gpm	130						
Solids capacity, lbs/ hr	1200						
Belt press operation @ max month							
Runtime @ 130 gpm, hrs/week	31	31	33	39			
Solids Loading, lbs/hr	846	846	846	846			

Monroe WWTP							
Design / Plant	**Design**	**Projected**			**Metcalf and Eddy**		**DOE Orange Book**
Component		**Year 2024**	**Year 2030**	**Year 2044**	**Typical**	**Range**	**Range**
Future Solids Handling Process, Phase IV Upgrades							
Sludge Feed Pumps							
Type	Progressive Cavity						
Number, each	1+1						
Capacity each, gpm:	175						
Total firm capacity , gpm	175						
Centrifuge Dewatering							
Number, each	1						
Hydraulic capacity, gpm	175						
Solids capacity, lbs/ hr	2,500						
Centrifuge operation @ max month							
Runtime @ 175 gpm, hrs/week	23	23	25	29			
Solids Loading, lbs/hr	1,138	1,138	1,138	1,138			
Dewatered Sludge Percent Solids	18%	18%	18%	18%			
Solids Capture Rate	95%	95%	95%	95%			
Solids Output, lbs/day							
@Average Annual	2,803	3,134	3,374	3,862			
@Max Month	3,585	3,567	3,840	4,426			
Solids Output, CY/day							
@Average Annual	9.2	10.3	11.1	12.7			
@Max Month	11.8	11.8	12.7	14.6			
Dewatered Cake Hopper							
Number each	1						
Capacity, CY	30						
Storage @ Average Annual, days	3.2	2.9	2.7	2.4			
Storage @ Max Month, days	2.5	2.6	2.4	2.1			
Biosolids Dryer							
Number	1.0						
Type	Indirect Paddle Wheel						
Dried Solids Concentration	90%	90%	90%	90%			
Solids Loading Capacity, lbs/hr	400						
Evaporative Capacity, lbsH2O/hr	1,870	1,778	1,778	1,778			
Runtime @ 400lbs/hr, hrs/week							
@Average Annual	49	55	59	68			
@Max Month	63	62	67	77			
Dried Biosolids Production, CY/week					Assumes 40.8 lb/cf, based on Komline testing		
@Average Annual	18	20	21	25			
@Max Month	23	23	24	28			

Appendix SS-D

Wastewater Reclamation Process
Opinion of Probable Project Costs

THIS PAGE INTENTIONALLY BLANK

APPENDIX SS-D

Water Reuse Storage and Distribution System Opinion of Probable Project Costs						
Item	**Quantity**	**Unit**	**Unit Price**	**Total Price**	**ENR Adjustment Percentage**	**2024 Total Price**
Mobilization/Demobilization	1	LS	$41,700	$41,700	130.28%	$54,400
Convert Digester No. 1 to Reclaimed Water Reservoir	1	EA	$59,500	$59,500	130.28%	$77,600
Reclaimed Water Pumping Station	1	LS	$71,400	$71,400	130.28%	$93,100
Tanker Truck Filling Station	1	LS	$23,800	$23,800	130.28%	$31,100
Piping, Valves and Instrumentation	1	LS	$118,900	$118,900	130.28%	$155,000
Subtotal				$315,300		$411,200
Contingency			30%	$94,590		$123,360
Subtotal				$409,890		$534,560
Washington State Sales Tax			8.9%	$36,480.21	9.40%	$50,248.64
Construction Cost				**$856,260**		**$1,119,369**
Engineering and SDCs			40%	$342,504.08		$447,747.46
Total Project Cost				**$1,198,764.29**		**$1,568,000**

Year	ENR Index	Adjustment Percentage
2015	10386.83	
2024	13532.44	1.303

Class "A" Reclaimed Water Sidestream Process Opinion of Probable Project Costs

Item	Quantity	Unit	Unit Price	Total Price	ENR Adjustment Percentage	2024 Total Price	
Mobilization/Demobilization	1	LS	$27,000	$27,000	130.28%	$35,200	
Reclaimed Water Feed Pumps	0	LS	$59,500	$0	130.28%	$0	Would use permeate pumps, not needed
Coagulation and Flocculation System	0	LS	$178,400	$0	130.28%	$0	Not needed with MBR
Effluent Filter	0	LS	$118,900	$0	130.28%	$0	Not needed with MBR
Class A UV Disinfection System	1	LS	$83,300	$83,300	130.28%	$108,600	
Alarms/electrical/instrumentation	1	LS	$95,100	$95,100	130.28%	$124,000	
Subtotal				$205,400		$267,800	
Contingency			30%	$61,620		$80,340	
Subtotal				$267,020		$348,140	
Washington State Sales Tax			8.9%	$23,764.78	9.4%	$32,725.16	
Construction Cost				**$557,805**		**$729,005**	
Engineering and SDCs			40%	$223,121.91		$291,602.06	
Total Project Cost				**$780,926.69**		**$1,021,000.00**	

Year	ENR Index	Adjustment Percentage
2015	10386.83	
2024	13532.44	1.303

Table SS 8-7 Annual O&M Cost Estimate for Water Reuse System

Item	Annual Quantity	Unit	Unit Price	Annual Cost	ENR Adjustment Percentage	2024 Total Price	
Labor (4 hr/day)(2)	140	hr	$30	$4,200	130.28%	$5,500	Reduce by half since only maintaining new UV system, not also filter system
Electricity(2)	23,000	kWh	$0.08	$1,840	130.28%	$2,400	Leave, since UV will be bulk of electricity cost
Maintenance	1	LS	$5,000	$5,000	130.28%	$6,600	Reduce by half since only maintaining new UV system, not also filter system
Lab/Miscellaneous	1	LS	10000	$10,000	130.28%	$13,100	Leave, since still need to do add'l lab tests
Total Annual Costs				**$21,040**		**$28,000**	

Notes:
1) Assumes operation 3.5 months per year.

Year	ENR Index	Adjustment Percentage
2015	10386.83	
2024	13532.44	1.303

Appendix SS-E

Not Used

THIS PAGE INTENTIONALLY BLANK

Appendix SS-F

Not Used

THIS PAGE INTENTIONALLY BLANK

Appendix SS-G

Not Used

THIS PAGE INTENTIONALLY BLANK

Appendix SS-H

Unauthorized Discharge SOP

THIS PAGE INTENTIONALLY BLANK

Memorandum

Date: 9/24/2021

From: Donovan Sheppard

To: WWTP Staff

Subject: NPDES #WA-0020486, General Conditions S3. F, Page 11-12

Clean Water Act, Section 307 (a)

40 CFR Part 122

In the event of any unauthorized discharges we shall take immediate steps to stop, contain, clean up, and take all reasonable steps to minimize any adverse impacts to the water of the state. This includes all collection system spills and treatment plant upsets or bypasses.

The appropriate notification procedure is as follows:

1. Notify the WWTP Supervisor by phone as soon as the discharge is discovered, regardless of time or day, in order listed below.

Donovan Sheppard	Home	360-794-6999
	Cell	425-232-5448
John Lande	Home	425-397-6148
	Cell	425-263-2876

2. In the event that Donovan or John cannot be reached the following steps need to be completed by senior staff member that day and documented.
    a. Theresa Davis
    b. Jose' Agudelo
    c. Randy Oesch
    d. Trevor Hankinson
    e. Tyler Long-Scott
    f. Zach Bowman
3. Madison Diaz, DOE 425-495-1777, shall be called if discharge occurs during working hours Monday through Friday. The Washington State Department of Ecology (DOE) shall be notified by telephone no later than 24 hours from the time of discharge was detected. If after hours contact the Emergency Response Tracker at 206-594-0000.
4. Notify Snohomish County Health District at 425-339-5252 or 425-339-5295 if after hours.

5. Within five days after the unauthorized discharge information has been reported by phone to DOE, a written report shall be submitted. A copy also needs to be submitted to the Snohomish County Health District.

Initial

TD

JA

RO

TH

TL

Appendix SS-I

SEPA Checklist

THIS PAGE INTENTIONALLY BLANK

SEPA[1] Environmental Checklist

Purpose of checklist

Governmental agencies use this checklist to help determine whether the environmental impacts of your proposal are significant. This information is also helpful to determine if available avoidance, minimization, or compensatory mitigation measures will address the probable significant impacts or if an environmental impact statement will be prepared to further analyze the proposal.

Instructions for applicants

This environmental checklist asks you to describe some basic information about your proposal. Please answer each question accurately and carefully, to the best of your knowledge. You may need to consult with an agency specialist or private consultant for some questions. **You may use "not applicable" or "does not apply" only when you can explain why it does not apply and not when the answer is unknown.** You may also attach or incorporate by reference additional studies reports. Complete and accurate answers to these questions often avoid delays with the SEPA process as well as later in the decision-making process.

The checklist questions apply to **all parts of your proposal**, even if you plan to do them over a period of time or on different parcels of land. Attach any additional information that will help describe your proposal or its environmental effects. The agency to which you submit this checklist may ask you to explain your answers or provide additional information reasonably related to determining if there may be significant adverse impact.

Instructions for lead agencies

Please adjust the format of this template as needed. Additional information may be necessary to evaluate the existing environment, all interrelated aspects of the proposal and an analysis of adverse impacts. The checklist is considered the first but not necessarily the only source of information needed to make an adequate threshold determination. Once a threshold determination is made, the lead agency is responsible for the completeness and accuracy of the checklist and other supporting documents.

Use of checklist for nonproject proposals

For nonproject proposals (such as ordinances, regulations, plans and programs), complete the applicable parts of sections A and B, plus the Supplemental Sheet for Nonproject Actions (Part D). Please completely answer all questions that apply and note that the words "project," "applicant," and "property or site" should be read as "proposal," "proponent," and "affected geographic area," respectively. The lead agency may exclude (for non-projects) questions in "Part B: Environmental Elements" that do not contribute meaningfully to the analysis of the proposal.

[1] https://ecology.wa.gov/Regulations-Permits/SEPA/Environmental-review/SEPA-guidance/Checklist-guidance

A.Background

Find help answering background questions[2]

1. **Name of proposed project, if applicable:**

   City of Monroe - Utility System Plan (Water, Sewer, Storm)

2. **Name of applicant:**

   City of Monroe, Public Works Department

3. **Address and phone number of applicant and contact person:**

   806 W. Main St, Monroe, WA 98272

4. **Date checklist prepared:**

   9/9/24

5. **Agency requesting checklist:**

   City of Monroe

6. **Proposed timing of schedule (including phasing, if applicable):**

   Proposed adoption date is winter 2024

7. **Do you have any plans for future additions, expansion, or further activity related to or connected with this proposal? If yes, explain.**

   Yes, the plan recommends individual projects for the implementation of the Utility System Plan. These projects will likely require additional environmental analysis.

8. **List any environmental information you know about that has been prepared, or will be prepared, directly related to this proposal.**

   Monroe 2044 SEIS and 2015 EIS. Projects associated with the Utility System Plan will likely require additional environmental analysis.

9. **Do you know whether applications are pending for governmental approvals of other proposals directly affecting the property covered by your proposal? If yes, explain.**

   No

10. **List any government approvals or permits that will be needed for your proposal, if known.**

    This item will require approval by the City Council

11. **Give brief, complete description of your proposal, including the proposed uses and the size of the project and site. There are several questions later in this checklist that ask you to describe certain aspects of your proposal. You do not need to repeat those answers on this page. (Lead agencies may modify this form to include additional specific information on project description.)**

[2] https://ecology.wa.gov/Regulations-Permits/SEPA/Environmental-review/SEPA-guidance/SEPA-checklist-guidance/SEPA-Checklist-Section-A-Background

The 2024 Utility System Plan is a non-project action that provides a strategic framework for the long-term development, maintenance, and enhancement of essential infrastructure systems. The plan addresses critical needs in water distribution, wastewater collection, and stormwater management to support the growing community. It identifies both physical infrastructure projects, such as pipeline expansions, facility upgrades, and flood mitigation measures, and programmatic initiatives aimed at improving system efficiency, sustainability, and resilience. This comprehensive plan ensures that future investments align with community growth, environmental stewardship, and regulatory compliance staffing needs, while promoting the safe, reliable, and cost-effective delivery of utility services.

12. **Location of the proposal. Give sufficient information for a person to understand the precise location of your proposed project, including a street address, if any, and section, township, and range, if known. If a proposal would occur over a range of area, provide the range or boundaries of the site(s). Provide a legal description, site plan, vicinity map, and topographic map, if reasonably available. While you should submit any plans required by the agency, you are not required to duplicate maps or detailed plans submitted with any permit applications related to this checklist.**

    Projects will take place throughout the City of Monroe. See plan for specific locations.

B.Environmental Elements

1. Earth

Find help answering earth questions[3]

a. **General description of the site:**

    The proposal is a nonproject action. The area covered by the CFP includes flat, gently rolling and hilly terrain, with some steep slopes.

Circle or highlight one: Flat, rolling, hilly, steep slopes, mountainous, other:

b. **What is the steepest slope on the site (approximate percent slope)?**

    The proposal is a nonproject action. Slopes will be addressed under the environmental review for each capital project proposed within the Utility System Plan as they are developed.

c. **What general types of soils are found on the site (for example, clay, sand, gravel, peat, muck)? If you know the classification of agricultural soils, specify them, and note any agricultural land of long-term commercial significance and whether the proposal results in removing any of these soils.**

[3] https://ecology.wa.gov/regulations-permits/sepa/environmental-review/sepa-guidance/sepa-checklist-guidance/sepa-checklist-section-b-environmental-elements/environmental-elements-earth

The proposal is a nonproject action. Sensitive soils and their functions will be addressed under the environmental review for each capital project proposed within the Master Plan as they are developed.

d. Are there surface indications or history of unstable soils in the immediate vicinity? If so, describe.

The proposal is a nonproject action. Soil stability will be assessed on an individual project basis through the SEPA review process and through the local grading permit process as each capital project is developed.

e. Describe the purpose, type, total area, and approximate quantities and total affected area of any filling, excavation, and grading proposed. Indicate source of fill.

The proposal is a nonproject action. Grading and filling requirements will be assessed on an individual project basis through the SEPA review process and through the local grading permit process as each capital project is developed.

f. Could erosion occur because of clearing, construction, or use? If so, generally describe.

The proposal is a nonproject action. Erosion would not occur as a result of the adoption of the Utility System Plan. Capital projects proposed within the Utility System Plan may potentially cause some erosion during construction. This potential is intensified on steeper embankments and slopes. Timing and phasing of construction, the amount of vegetation removed, the effectiveness of erosion control measures, and weather conditions will be evaluated during planning and permitting for each capital project, and will be addressed on a per project basis under environmental review as well.

g. About what percent of the site will be covered with impervious surfaces after project construction (for example, asphalt or buildings)?

The proposal is a nonproject action. Impervious surfaces will not result from the adoption of the Utility System Plan, though capital projects proposed within the plan would result in small quantities of increased impervious surface.

h. Proposed measures to reduce or control erosion, or other impacts to the earth, if any.

The proposal is a nonproject action. As each capital project is planned, a temporary erosion and sedimentation control plan would be developed as part of the construction plans to minimize erosion and contain sediment during construction. Erosion and sedimentation control measures may include vegetation retention, temporary and permanent seeding, erosion control fabrics, fabric filter fences, gravel berms, and other BMPs as described in the Stormwater Management manual for Western Washington Monitoring and maintenance of such control measures would be conducted throughout construction to ensure proper performance

2. Air

Find help answering air questions[4]

a. What types of emissions to the air would result from the proposal during construction, operation, and maintenance when the project is completed? If any, generally describe and give approximate quantities if known.

The proposal is a nonproject action. Development of the proposed capital projections described within the Utility System Plan will require an analysis of emissions on a per-project basis. These emissions will be quantified during the planning and permitting stages of each capital project.

b. Are there any off-site sources of emissions or odor that may affect your proposal? If so, generally describe.

Not applicable. The proposal is a nonproject action.

c. Proposed measures to reduce or control emissions or other impacts to air, if any:

Not applicable. The proposal is a nonproject action.

3. Water

Find help answering water questions[5]

a. Surface:

Find help answering surface water questions[6]

1. Is there any surface water body on or in the immediate vicinity of the site (including year-round and seasonal streams, saltwater, lakes, ponds, wetlands)? If yes, describe type and provide names. If appropriate, state what stream or river it flows into.

The proposal is a nonproject action. Some projects proposed in the Utility System Plan are located in the immediate vicinity of a waterbody. However, specific plans for these and other proposed improvements have yet to be developed. A project specific environmental review and any necessary Critical Areas, Floodplains or

[4] https://ecology.wa.gov/Regulations-Permits/SEPA/Environmental-review/SEPA-guidance/SEPA-checklist-guidance/SEPA-Checklist-Section-B-Environmental-elements/Environmental-elements-Air
[5] https://ecology.wa.gov/Regulations-Permits/SEPA/Environmental-review/SEPA-guidance/SEPA-checklist-guidance/SEPA-Checklist-Section-B-Environmental-elements/Environmental-elements-3-Water
[6] https://ecology.wa.gov/Regulations-Permits/SEPA/Environmental-review/SEPA-guidance/SEPA-checklist-guidance/SEPA-Checklist-Section-B-Environmental-elements/Environmental-elements-3-Water/Environmental-elements-Surface-water

Shoreline Management permitting will precede construction of each project action described in the Master Plan.

2. **Will the project require any work over, in, or adjacent to (within 200 feet) the described waters? If yes, please describe and attach available plans.**

   The proposal is a nonproject action and adoption of the Utility System Plan will not require work near or in water.

   The proposed projects within the Master Plan may be located within 200 feet of the waters described above. However, specific plans for these and other proposed improvements have yet to be developed. A project specific environmental review and any necessary Critical Areas, Floodplains or Shoreline Management permitting will precede construction of each project action described in the Master Plan.

3. **Estimate the amount of fill and dredge material that would be placed in or removed from surface water or wetlands and indicate the area of the site that would be affected. Indicate the source of fill material.**

   These impacts are not anticipated under this nonproject action.

4. **Will the proposal require surface water withdrawals or diversions? Give a general description, purpose, and approximate quantities if known.**

   The proposal is a nonproject action. Proposed projects within the Utility System Plan would not require surface water withdrawals or diversions. Any project impacts to stormwater will be mitigated with BMPs and analyzed at project specific level.

5. **Does the proposal lie within a 100-year floodplain? If so, note location on the site plan.**

   The proposal is a nonproject action. However, portions of proposed future improvements may lie within the 100-year floodplain. A definitive determination of floodplain proximity, together with a project specific environmental review, will be developed prior to implementation of all capital projects and improvements.

6. **Does the proposal involve any discharges of waste materials to surface waters? If so, describe the type of waste and anticipated volume of discharge.**

   The proposal is a nonproject action. It is not anticipated the projects identified in the Utility System Plan will required the discharges of waste materials to surface waters.

b. Ground:

Find help answering ground water questions[7]

1. **Will groundwater be withdrawn from a well for drinking water or other purposes? If so, give a general description of the well, proposed uses and approximate quantities withdrawn from the well. Will water be discharged to groundwater? Give a general description, purpose, and approximate quantities if known.**

[7] https://ecology.wa.gov/Regulations-Permits/SEPA/Environmental-review/SEPA-guidance/SEPA-checklist-guidance/SEPA-Checklist-Section-B-Environmental-elements/Environmental-elements-3-Water/Environmental-elements-Groundwater

The proposal is a nonproject action. Any expected water discharge that comes up during project design will be permitted and conditioned under a project specific environmental review.

2. **Describe waste material that will be discharged into the ground from septic tanks or other sources, if any (domestic sewage; industrial, containing the following chemicals…; agricultural; etc.). Describe the general size of the system, the number of such systems, the number of houses to be served (if applicable), or the number of animals or humans the system(s) are expected to serve.**

   The proposal is a nonproject action. The identified projects do not anticipate discharging waste material into the ground.

c. Water Runoff (including stormwater):

1. **Describe the source of runoff (including storm water) and method of collection and disposal, if any (include quantities, if known). Where will this water flow? Will this water flow into other waters? If so, describe.**

   The proposal is a nonproject action. Capital projects proposed within the Utility Master Plan would result in construction runoff as well as runoff from the roofs of completed reservoirs and other structures. Each project action proposed within the Utility System Plan will require runoff controls prescribed by local permit requirements and project specific environmental review.

2. **Could waste materials enter ground or surface waters? If so, generally describe.**

   The proposal is a nonproject action and not anticipated with the proposed projects.

3. **Does the proposal alter or otherwise affect drainage patterns in the vicinity of the site? If so, describe.**

   The proposal is a nonproject action. Each project action proposed within the Utility System Plan will be evaluated for any effects to site drainage during predesign and permitting.

d. Proposed measures to reduce or control surface, ground, and runoff water, and drainage pattern impacts, if any:

The proposal is a nonproject action. Project actions as proposed within the Utility System Plan will adhere to standard construction practices (temporary erosion and sedimentation controls) as required by the City of Monroe.

4. Plants

Find help answering plants questions

a. Check the types of vegetation found on the site:

☒ **deciduous tree: alder, maple, aspen, other**

☒ **evergreen tree: fir, cedar, pine, other**

☒ **shrubs**

☒ **grass**

☒ **pasture**

☐ **crop or grain**

☐ **orchards, vineyards, or other permanent crops.**

☒ **wet soil plants: cattail, buttercup, bullrush, skunk cabbage, other**

☒ **water plants: water lily, eelgrass, milfoil, other**

☐ **other types of vegetation**

b. What kind and amount of vegetation will be removed or altered?

The proposal is a nonproject action. As a result of proposed capital projects and system improvements proposed in the Utility System Plan, grasses, native shrubs, and some trees in the vicinity of facility construction activities and other land disturbing work would be disrupted or removed.

c. List threatened and endangered species known to be on or near the site.

The proposal is a nonproject action. Threatened and endangered species and their habitats will be protected as each project is planned and permitted under individual environmental review and local permitting processes for each capital improvement project proposal and system improvement project.

d. Proposed landscaping, use of native plants, or other measures to preserve or enhance vegetation on the site, if any.

The proposal is a nonproject action. Erosion control in areas of disrupted vegetation will be provided during construction. Revegetation will take place following construction.

e. List all noxious weeds and invasive species known to be on or near the site.

The proposal is a nonproject action. This will be reviewed at a project level. All invasive species will be handled in accordance with the applicable State regulations.

5. Animals

Find help answering animal questions[8]

a. List any birds and other animals that have been observed on or near the site or are known to be on or near the site.

Examples include:

- **Birds: hawk, heron, eagle, songbirds, other:**
- **Mammals: deer, bear, elk, beaver, other:**
- **Fish: bass, salmon, trout, herring, shellfish, other:**

[8] https://ecology.wa.gov/Regulations-Permits/SEPA/Environmental-review/SEPA-guidance/SEPA-checklist-guidance/SEPA-Checklist-Section-B-Environmental-elements/Environmental-elements-5-Animals

b. List any threatened and endangered species known to be on or near the site.

The proposal is a nonproject action. Threatened and endangered species and their habitats will be protected as each project is planned and permitted under individual environmental review and local permitting processes for each capital improvement project proposal and system improvement project.

c. Is the site part of a migration route? If so, explain.

This is a nonproject action. The capital projects and system improvement proposed within the Utility System Plan could result in impacts to various sites throughout the service area where those projects are proposed. The Skykomish River is part of the Puget Sound Basin, which is included in the Pacific flyway. Larger mammals migrate between higher and lower elevations, seasonally, through portions of the City of Monroe and its water service area. The Skykomish and Woods Creek area are conduits for the migration of a number of anadromous fish species.

d. Proposed measures to preserve or enhance wildlife, if any.

The proposal is a nonproject action. Although significant wildlife and habitat impacts are not anticipated, specific mitigation measures will be developed within the early design and planning stages for each proposed capital project and in response to resource agency concerns associated with the implementation of each capital project and system improvement proposed within the Utility System Plan.

e. List any invasive animal species known to be on or near the site.

The proposal is a nonproject action. The capital projects and system improvement proposed within the Utility System Plan could result in impacts to various sites throughout the service area where those projects are proposed. Any invasive species discovered during pre-design or surveying for projects included in the Utility System Plan will be included in the project environmental analyses.

6. Energy and natural resources

Find help answering energy and natural resource questions[9]

a. What kinds of energy (electric, natural gas, oil, wood stove, solar) will be used to meet the completed project's energy needs? Describe whether it will be used for heating, manufacturing, etc.

The proposal is a nonproject action. Energy would be required for the construction of any proposed system improvement or capital project and would principally include diesel and gasoline fuel used by construction vehicles and equipment, and by workers accessing construction sites. Pump station facilities and improvements will require increased electricity, and possibly other energy sources, for operation.

[9] https://ecology.wa.gov/Regulations-Permits/SEPA/Environmental-review/SEPA-guidance/SEPA-checklist-guidance/SEPA-Checklist-Section-B-Environmental-elements/Environmental-elements-6-Energy-natural-resou

b. Would your project affect the potential use of solar energy by adjacent properties? If so, generally describe.

No, the proposed projects are at or near existing grade.

c. What kinds of energy conservation features are included in the plans of this proposal? List other proposed measures to reduce or control energy impacts, if any.

The Utility System Plan promotes multimodal transportation and is intended to reduce the energy needs typically associated with transportation.

7. Environmental health

Health Find help with answering environmental health questions[10]

a. Are there any environmental health hazards, including exposure to toxic chemicals, risk of fire and explosion, spill, or hazardous waste, that could occur because of this proposal? If so, describe.

The proposal is a nonproject action. Implementation of the proposed projects within the Utility System Plan could result in some environmental health hazards common to construction projects. The potential for spills of fuel, oil, lubricants, solvents, disinfecting agents or concrete additives used during construction has the potential to impact human health and damage natural resources. Best Management Practices (BMPs) will be followed in all cases, and appropriate hazard plans and chemical handling procedures specific to each site, compound and project will be followed.

1. **Describe any known or possible contamination at the site from present or past uses.**

   The proposal is a nonproject action. This does not apply.

2. **Describe existing hazardous chemicals/conditions that might affect project development and design. This includes underground hazardous liquid and gas transmission pipelines located within the project area and in the vicinity.**

   The proposal is a nonproject action. This does not apply.

3. **Describe any toxic or hazardous chemicals that might be stored, used, or produced during the project's development or construction, or at any time during the operating life of the project.**

   The proposal is a nonproject action. This does not apply.

4. **Describe special emergency services that might be required.**

   The proposal is a nonproject action. This does not apply.

5. **Proposed measures to reduce or control environmental health hazards, if any.**

   The proposal is a nonproject action. This does not apply.

b. Noise

[10] https://ecology.wa.gov/Regulations-Permits/SEPA/Environmental-review/SEPA-guidance/SEPA-checklist-guidance/SEPA-Checklist-Section-B-Environmental-elements/Environmental-elements-7-Environmental-health

1. **What types of noise exist in the area which may affect your project (for example: traffic, equipment, operation, other)?**

   The proposal is a nonproject action. This does not apply.

2. **What types and levels of noise would be created by or associated with the project on a short-term or a long-term basis (for example: traffic, construction, operation, other)? Indicate what hours noise would come from the site)?**

   The proposal is a nonproject action. Construction activities associated with the implementation of the CFP would generate short-term noise during the construction period. Potential impacts from project specific noise would be evaluated and mitigated with appropriate BMPs.

3. **Proposed measures to reduce or control noise impacts, if any:**

   The proposal is a nonproject action. This does not apply.

8. Land and shoreline use

Find help answering land and shoreline use questions[11]

a. **What is the current use of the site and adjacent properties? Will the proposal affect current land uses on nearby or adjacent properties? If so, describe.**

   The proposal is a nonproject action. The land uses which exist in the project area include a broad range of residential, commercial, industrial, agricultural, open space, and public uses.

b. **Has the project site been used as working farmlands or working forest lands? If so, describe. How much agricultural or forest land of long-term commercial significance will be converted to other uses because of the proposal, if any? If resource lands have not been designated, how many acres in farmland or forest land tax status will be converted to nonfarm or nonforest use?**

   The proposal is a nonproject action. This does not apply.

   1. **Will the proposal affect or be affected by surrounding working farm or forest land normal business operations, such as oversize equipment access, the application of pesticides, tilling, and harvesting? If so, how?**

      The proposal is a nonproject action. This does not apply.

c. **Describe any structures on the site.**

   The proposal is a nonproject action. This does not apply.

d. **Will any structures be demolished? If so, what?**

   The proposal is a nonproject action. This does not apply.

e. **What is the current zoning classification of the site?**

[11] https://ecology.wa.gov/Regulations-Permits/SEPA/Environmental-review/SEPA-guidance/SEPA-checklist-guidance/SEPA-Checklist-Section-B-Environmental-elements/Environmental-elements-8-Land-shoreline-use

The proposal is a nonproject action. This does not apply.

f. What is the current comprehensive plan designation of the site?

The proposal is a nonproject action. This does not apply.

g. If applicable, what is the current shoreline master program designation of the site?

The proposal is a nonproject action. This does not apply.

h. Has any part of the site been classified as a critical area by the city or county? If so, specify.

The proposal is a nonproject action. This does not apply.

i. Approximately how many people would reside or work in the completed project?

The proposal is a nonproject action. This does not apply.

j. Approximately how many people would the completed project displace?

The proposal is a nonproject action. This does not apply.

k. Proposed measures to avoid or reduce displacement impacts, if any.

The proposal is a nonproject action. This does not apply.

l. Proposed measures to ensure the proposal is compatible with existing and projected land uses and plans, if any.

The proposed projects within the Utility System Plan were reviewed for consistency with the existing and projected land uses and plans. No conflicts were noted during the development of the Utility System Plan.

m. Proposed measures to reduce or control impacts to agricultural and forest lands of long-term commercial significance, if any:

None, the Utility System Plan does not identify potential impacts to agricultural and forest lands.

9. Housing

Find help answering housing questions[12]

a. Approximately how many units would be provided, if any? Indicate whether high, middle, or low-income housing.

None, the Plan does not add or remove any units.

b. Approximately how many units, if any, would be eliminated? Indicate whether high, middle, or low-income housing.

None, the Plan does not add or remove any units.

c. Proposed measures to reduce or control housing impacts, if any:

[12] https://ecology.wa.gov/Regulations-Permits/SEPA/Environmental-review/SEPA-guidance/SEPA-checklist-guidance/SEPA-Checklist-Section-B-Environmental-elements/Environmental-elements-9-Housing

None, the Plan does not add or remove any units.

10. Aesthetics

Find help answering aesthetics questions[13]

a. What is the tallest height of any proposed structure(s), not including antennas; what is the principal exterior building material(s) proposed?

The majority of the improvements are below ground (i.e. water, sewer, storm pipes) at or slightly above grade.

b. What views in the immediate vicinity would be altered or obstructed?

None

c. Proposed measures to reduce or control aesthetic impacts, if any:

None are identified at this time.

11. Light and glare

Find help answering light and glare questions[14]

a. What type of light or glare will the proposal produce? What time of day would it mainly occur?

No lighting is proposed at this time.

b. Could light or glare from the finished project be a safety hazard or interfere with views?

N/A

c. What existing off-site sources of light or glare may affect your proposal?

Nothing has been identified.

d. Proposed measures to reduce or control light and glare impacts, if any:

None needed at this time.

12. Recreation

Find help answering recreation questions

a. What designated and informal recreational opportunities are in the immediate vicinity?

The Utility System Plan is a nonproject action that does not directly create or modify recreational opportunities. However, utility infrastructure projects may be located near designated and informal recreational areas.

b. Would the proposed project displace any existing recreational uses? If so, describe.

[13] https://ecology.wa.gov/Regulations-Permits/SEPA/Environmental-review/SEPA-guidance/SEPA-checklist-guidance/SEPA-Checklist-Section-B-Environmental-elements/Environmental-elements-10-Aesthetics
[14] https://ecology.wa.gov/Regulations-Permits/SEPA/Environmental-review/SEPA-guidance/SEPA-checklist-guidance/SEPA-Checklist-Section-B-Environmental-elements/Environmental-elements-11-Light-glare

No, it would enhance recreational opportunities.

c. Proposed measures to reduce or control impacts on recreation, including recreation opportunities to be provided by the project or applicant, if any:

No impacts are identified.

13. Historic and cultural preservation

Find help answering historic and cultural preservation questions[15]

a. Are there any buildings, structures, or sites, located on or near the site that are over 45 years old listed in or eligible for listing in national, state, or local preservation registers? If so, specifically describe.

The proposal is a nonproject action. No historical or cultural resources are known to exist on or next to the sites of proposed system improvements or capital projects. Prior to any construction, inquiries will be made into County records and to the Washington State Office of Archaeology and Historic Preservation (OAHP) regarding the presence of any known cultural resources.

b. Are there any landmarks, features, or other evidence of Indian or historic use or occupation? This may include human burials or old cemeteries. Are there any material evidence, artifacts, or areas of cultural importance on or near the site? Please list any professional studies conducted at the site to identify such resources.

The proposal is a nonproject action. None are known to exist at the sites of potential improvements. Appropriate records searches and surveys will be made before earth moving equipment is engaged.

c. Describe the methods used to assess the potential impacts to cultural and historic resources on or near the project site. Examples include consultation with tribes and the department of archeology and historic preservation, archaeological surveys, historic maps, GIS data, etc.

The proposal is a nonproject action. During pre-design for each project, efforts will include consultation with tribes and the department of archeology and historic preservation, review of historic maps and GIS data, and site surveying

d. Proposed measures to avoid, minimize, or compensate for loss, changes to, and disturbance to resources. Please include plans for the above and any permits that may be required.

The proposal is a nonproject action. In addition to cultural resource studies, any evidence of historic or cultural resources is encountered during construction or installation of any work proposed within the Utility System Plan, all work would be halted in the area and a state-approved archaeologist/historian would be engaged to investigate, evaluate and/or move or curate such resources, as appropriate.

[15] https://ecology.wa.gov/Regulations-Permits/SEPA/Environmental-review/SEPA-guidance/SEPA-checklist-guidance/SEPA-Checklist-Section-B-Environmental-elements/Environmental-elements-13-Historic-cultural-p

14. Transportation

Find help with answering transportation questions[16]

a. Identify public streets and highways serving the site or affected geographic area and describe proposed access to the existing street system. Show on site plans, if any.

The proposal is a nonproject action. This does not apply.

b. Is the site or affected geographic area currently served by public transit? If so, generally describe. If not, what is the approximate distance to the nearest transit stop?

The proposal is a nonproject action. This does not apply.

Will the proposal require any new or improvements to existing roads, streets, pedestrian, bicycle, or state transportation facilities, not including driveways? If so, generally describe (indicate whether public or private).

The proposal, as a Utility System Plan, does not directly mandate new roads, streets, pedestrian, bicycle, or state transportation facilities. However, certain capital utility projects, such as the installation or replacement of water, sewer, and stormwater infrastructure, may necessitate temporary improvements or modifications to existing roads or sidewalks to facilitate construction activities. These improvements are typically short-term and occur within the public right-of-way.

In some cases, coordination with transportation agencies may be required for more extensive projects, such as utility expansions that coincide with roadway or pedestrian improvements. For example, trenching or pipe replacement could impact public roads, and may involve resurfacing or reconfiguring parts of the street or sidewalk following utility work. Additionally, utility projects may align with larger transportation goals, such as incorporating green stormwater infrastructure into road designs or improving drainage in flood-prone areas. Any such improvements would be public and designed to enhance both utility and transportation systems.

c. Will the project or proposal use (or occur in the immediate vicinity of) water, rail, or air transportation? If so, generally describe.

The proposal is a nonproject action. This does not apply.

d. How many vehicular trips per day would be generated by the completed project or proposal? If known, indicate when peak volumes would occur and what percentage of the volume would be trucks (such as commercial and nonpassenger vehicles). What data or transportation models were used to make these estimates?

The proposal is a nonproject action. This does not apply.

e. Will the proposal interfere with, affect, or be affected by the movement of agricultural and forest products on roads or streets in the area? If so, generally describe.

[16] https://ecology.wa.gov/Regulations-Permits/SEPA/Environmental-review/SEPA-guidance/SEPA-checklist-guidance/SEPA-Checklist-Section-B-Environmental-elements/Environmental-elements-14-Transportation

The proposal is a nonproject action. This does not apply.

f. Proposed measures to reduce or control transportation impacts, if any:

The proposal is a nonproject action. This does not apply.

15. Public services

Find help answering public service questions[17]

a. Would the project result in an increased need for public services (for example: fire protection, police protection, public transit, health care, schools, other)? If so, generally describe.

The proposal is a nonproject action. This does not apply.

b. Proposed measures to reduce or control direct impacts on public services, if any.

The proposal is a nonproject action. This does not apply.

16. Utilities

Find help answering utilities questions[18]

a. Circle utilities currently available at the site: electricity, natural gas, water, refuse service, telephone, sanitary sewer, septic system, other:

The proposal is a nonproject action. This does not apply.

b. Describe the utilities that are proposed for the project, the utility providing the service, and the general construction activities on the site or in the immediate vicinity which might be needed.

The proposal is a nonproject action. This does not apply.

C.Signature

Find help about who should sign[19]

The above answers are true and complete to the best of my knowledge. I understand that the lead agency is relying on them to make its decision.

X Jordan Ottow

Type name of signee:

Jordan Ottow

[17] https://ecology.wa.gov/regulations-permits/sepa/environmental-review/sepa-guidance/sepa-checklist-guidance/sepa-checklist-section-b-environmental-elements/environmental-elements-15-public-services
[18] https://ecology.wa.gov/regulations-permits/sepa/environmental-review/sepa-guidance/sepa-checklist-guidance/sepa-checklist-section-b-environmental-elements/environmental-elements-16-utilities
[19] https://ecology.wa.gov/Regulations-Permits/SEPA/Environmental-review/SEPA-guidance/SEPA-checklist-guidance/SEPA-Checklist-Section-C-Signature

Position and agency/organization: Public Works, Operations Manager/City of Monroe

Date submitted:

D.Supplemental sheet for nonproject actions

Find help for the nonproject actions worksheet[20]

Do not use this section for project actions.

Because these questions are very general, it may be helpful to read them in conjunction with the list of the elements of the environment.

When answering these questions, be aware of the extent the proposal, or the types of activities likely to result from the proposal, would affect the item at a greater intensity or at a faster rate than if the proposal were not implemented. Respond briefly and in general terms.

1. **How would the proposal be likely to increase discharge to water; emissions to air; production, storage, or release of toxic or hazardous substances; or production of noise?**

   The proposal, as a nonproject Utility System Plan, is not expected to directly increase discharges to water, emissions to air, the production or release of toxic or hazardous substances, or the production of noise. However, individual capital utility projects identified within the plan could have temporary construction-related impacts during their implementation.

   Discharge to Water: Projects that improve water and sewer infrastructure may involve temporary increases in stormwater runoff during construction activities, especially if soil is disturbed. However, long-term impacts are likely to be positive, as stormwater management improvements, including upgrades to drainage systems, green infrastructure, and treatment facilities, are intended to reduce the risk of flooding and improve water quality.

   Emissions to Air: Temporary increases in emissions may occur during construction due to the use of heavy machinery and vehicles. These impacts would be localized and short-term, with mitigation measures such as dust control and efficient equipment use to minimize air quality impacts.

   Toxic or Hazardous Substances: The plan itself does not involve the production or release of hazardous substances. However, utility projects that involve the replacement or repair of aging infrastructure could potentially encounter and manage hazardous materials, such as asbestos in old pipes or contaminated soils. Any such materials would be handled in accordance with regulatory standards to ensure safety and environmental protection.

   Production of Noise: Noise impacts are also expected to be temporary and limited to construction phases. Typical sources would include machinery, excavation, and

[20] https://ecology.wa.gov/regulations-permits/sepa/environmental-review/sepa-guidance/sepa-checklist-guidance/sepa-checklist-section-d-non-project-actions

transportation of materials. These activities would comply with local noise ordinances and best practices to minimize disruption to surrounding communities.

In the long term, the projects identified in the plan are designed to enhance environmental sustainability by improving water and wastewater treatment and reducing the likelihood of pollution from stormwater runoff or sewer overflows.

- **Proposed measures to avoid or reduce such increases are:**

  The water runoff from the increase in impervious surface will be treated in accordance with the WW Stormwater Manual

2. How would the proposal be likely to affect plants, animals, fish, or marine life?

Adverse impacts on plants, animals, fish, or marine life are not anticipated as part of the implementation of the Utility System Plan. The majority of proposed work would take place within existing, improved ROW. Those that are not within these areas will undergo a individual assessment prior to construction.

- **Proposed measures to protect or conserve plants, animals, fish, or marine life are:**

  None needed in association with the Utility System Plan.

3. How would the proposal be likely to deplete energy or natural resources?

Not likely.

- **Proposed measures to protect or conserve energy and natural resources are:**

Energy Efficiency in Infrastructure: New and upgraded utility infrastructure (water, sewer, storm systems) will incorporate energy-efficient technologies and equipment. For example, high-efficiency pumps and motors can be installed in water and wastewater systems to reduce energy consumption. Automated monitoring systems can also be utilized to optimize energy use by detecting leaks or inefficiencies.

Sustainable Water Management: The plan promotes water conservation through improved infrastructure that reduces water loss from leaks in distribution systems. It may also include measures such as low-energy treatment processes, greywater reuse, and the promotion of water-efficient practices among consumers, reducing the demand for natural water resources.

Stormwater Management Practices: Incorporating green infrastructure, such as rain gardens, permeable pavements, and bioswales, can help manage stormwater in a way that conserves natural resources. These measures reduce the need for energy-intensive stormwater pumping and treatment while promoting natural groundwater recharge.

Renewable Energy Options: Where feasible, the plan may encourage the use of renewable energy sources, such as solar panels for water treatment facilities, to reduce reliance on non-renewable energy.

Lifecycle Sustainability: Selecting durable materials for pipelines, pumps, and other infrastructure will reduce the frequency of replacements, conserving the raw materials and energy required for ongoing repairs and rebuilds.

4. **How would the proposal be likely to use or affect environmentally sensitive areas or areas designated (or eligible or under study) for governmental protection, such as parks, wilderness, wild and scenic rivers, threatened or endangered species habitat, historic or cultural sites, wetlands, floodplains, or prime farmlands?**

It is a very low likelihood that any of the projects resulting from the Utility System Plan would negatively impact these areas.

- **Proposed measures to protect such resources or to avoid or reduce impacts are:**

  None needed in association with the Utility System Plan.

5. **How would the proposal be likely to affect land and shoreline use, including whether it would allow or encourage land or shoreline uses incompatible with existing plans?**

It is a very low likelihood that any of the projects resulting from the Utility System Plan would negatively impact these areas.

- **Proposed measures to avoid or reduce shoreline and land use impacts are:**

  Not applicable.

6. **How would the proposal be likely to increase demands on transportation or public services and utilities?**

   The Utility System Plan itself, as a nonproject action, is not expected to directly increase demands on transportation, public services, or utilities. However, individual capital projects identified in the plan, such as water, sewer, and stormwater infrastructure improvements, may temporarily impact these areas during their construction phases. Specifically:

- **Transportation**: Construction activities for utility upgrades (e.g., water main replacements, sewer line installations) may require temporary road closures, detours, or increased traffic congestion due to construction vehicles and equipment. This could increase short-term demand on transportation infrastructure, particularly around construction zones.
- **Public Services**: Utility work could require temporary coordination with public services, such as police and fire departments, to manage traffic control or provide emergency access during construction. In some cases, service disruptions (e.g., water shut-offs or detours) may also place temporary demands on public communication services to notify and manage impacts to the public.

- **Utilities**: During construction, there may be brief service interruptions or reductions in capacity for existing water, sewer, or storm systems. Additionally, improvements to infrastructure could increase the capacity for future development, leading to potential long-term increases in demand for utility services as population and development grow.

  - **Proposed measures to reduce or respond to such demand(s) are:**
  - Traffic and Transportation Management: Implement traffic control plans, including the use of detours, lane reductions, and scheduled work during off-peak hours to minimize disruptions to transportation. Clear signage and advance public notifications can help reduce the impact on local transportation networks.
  - Service Coordination: Work closely with public services (e.g., police, fire, emergency medical services) to ensure access to construction areas and affected neighborhoods. This includes ensuring that emergency vehicles can navigate construction zones and that service interruptions are minimized or planned during times of low impact.

    Utility Service Disruptions: Minimize service interruptions by planning and scheduling utility work during low-demand periods, providing advance notice to affected residents and businesses, and ensuring temporary services are available if required. Utility providers can coordinate with construction teams to ensure continuous service whenever possible.
  - Long-Term Utility Capacity Planning: The Utility System Plan is designed to address future growth and development, ensuring that improvements in water, sewer, and stormwater infrastructure can meet increased demands over time. By upgrading systems before they reach capacity, the plan proactively reduces future stress on utility services.

7. Identify, if possible, whether the proposal may conflict with local, state, or federal laws or requirements for the protection of the environment.

None

Appendix SS-J

Capital Improvement Project Sheets

THIS PAGE INTENTIONALLY BLANK

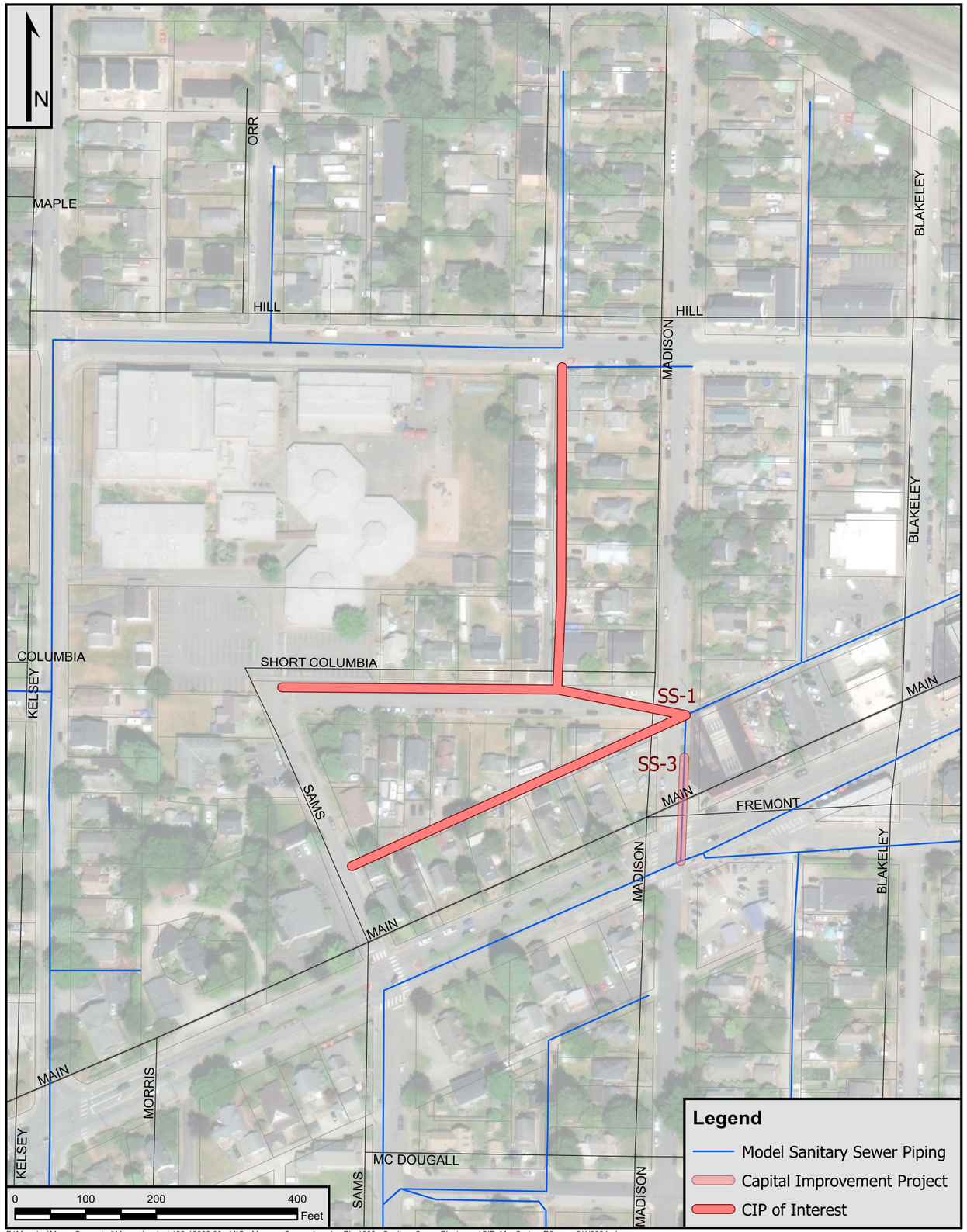

P:\Mapping\Maps_Generated\Monroe\projects\22-10808.00 - MIG - Monroe Comprehensive Plan\003 - Sanitary Sewer Plan\maps\CIP_MapSeries_R0.aprx 9/4/2024 rjones

City of Monroe Utility Plan Update-Sanitary Sewer

Project Name: SS-1

Project Information

Project Description:
$500,000/yr. Pipe Replacement Projects-Short Columbia St

Project Duration:	2025	**Length of Pipe:**	1,550 ft

Special Considerations:

§ Replacement program for pipes in disrepair. Replace and/or upsize the existing 8-inch clay sewer trunk on Short Columbia St between N Sams street and N Madison Street.

Project Location:

Piping along Short Columbia St from North Madison St to Sam St. Piping Along the alley between W Main St and Short Columbia from W Madison to Sam St. Piping from Short Columbia north to West Hill St along Arthur Lane.

Estimated Cost Breakdown

Total Opinion of Probable Project Cost	$ 1,550,000

Assumptions:

Costing is rounded up to the nearest $10,000 and presented as future dollars. Costs were baselined in 2024 dollars, from 2024 for the first 6 years of the Capital Improvement Program an inflation factor of 3.0% was utilized, and for years 7 to 20, an inflation factor of 2.4% was utilized.

City Notes:

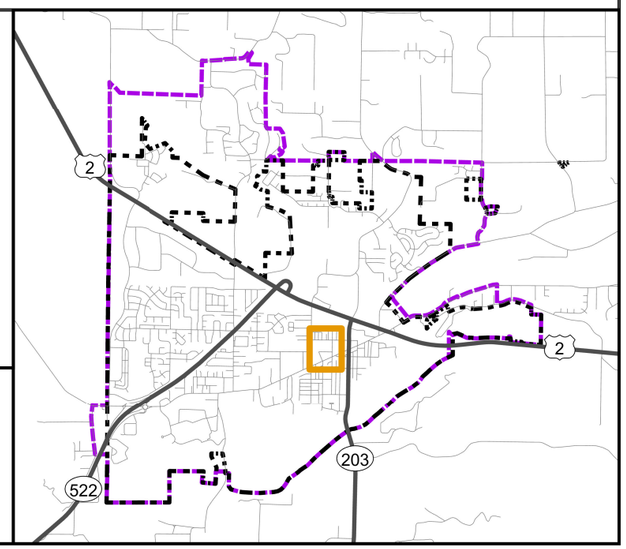

bhc CONSULTANTS
September 2024

Credits: Maxar, Microsoft

Sanitary Sewer System: City of Monroe 2023 and 2024

Snohomish County base data 2023

Data sources supplied may not reflect current or actual conditions. This map is a geographic representation based on information available. It does not represent survey data. No warranty is made concerning the accuracy, currency, or completeness of data depicted on this map. BHC Consultants LLC., assumes no responsibility for the validity of any information presented herein, nor any responsibility for the use or misuse of the data.

COPYRIGHT © 2024 BHC CONSULTANTS LLC., ALL RIGHTS RESERVED

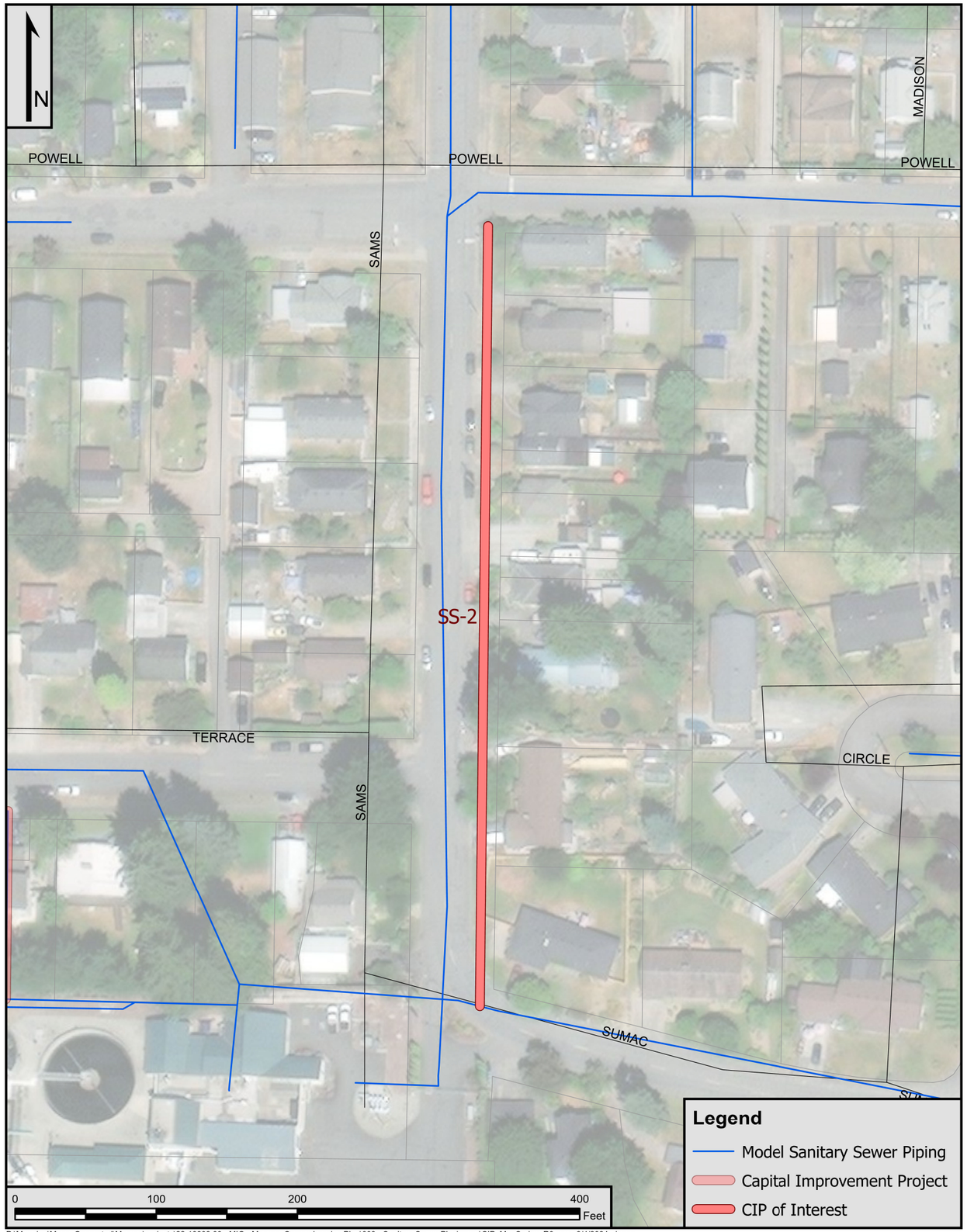

P:\Mapping\Maps_Generated\Monroe\projects\22-10808.00 - MIG - Monroe Comprehensive Plan\003 - Sanitary Sewer Plan\maps\CIP_MapSeries_R0.aprx 9/4/2024 rjones

City of Monroe Utility Plan Update-Sanitary Sewer

Project Name: SS-2

Project Information

Project Description:
$500,000/yr. Replacement Projects - S Sams St

Project Duration:	2025	**Length of Pipe:**	670 ft

Special Considerations:
§ Replace and/or upsize the existing 24-inch gravity sewer trunk on S Sams St between Powell St and Sumac Dr.

Project Location:
Along South Sam St from Sumac Drive to Powell St.

Estimated Cost Breakdown

Total Opinion of Probable Project Cost	$ 210,000

Assumptions:

Costing is rounded up to the nearest $10,000 and presented as future dollars. Costs were baselined in 2024 dollars, from 2024 for the first 6 years of the Capital Improvement Program an inflation factor of 3.0% was utilized, and for years 7 to 20, an inflation factor of 2.4% was utilized.

City Notes:

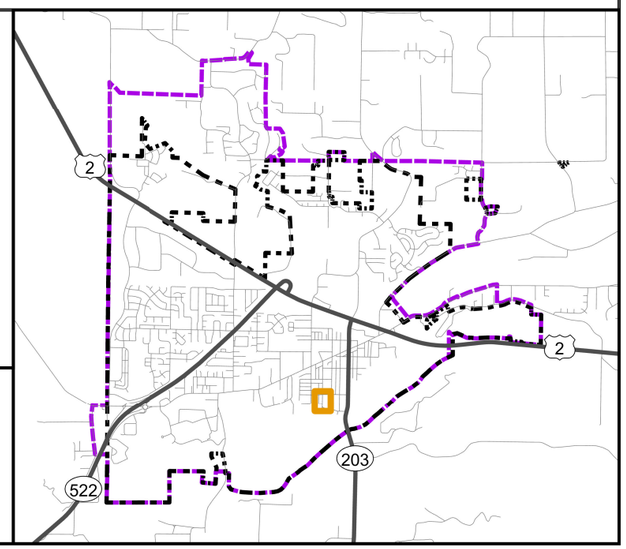

September 2024

Credits: Maxar

Sanitary Sewer System: City of Monroe 2023 and 2024

Snohomish County base data 2023

Data sources supplied may not reflect current or actual conditions. This map is a geographic representation based on information available. It does not represent survey data. No warranty is made concerning the accuracy, currency, or completeness of data depicted on this map. BHC Consultants LLC., assumes no responsibility for the validity of any information presented herein, nor any responsibility for the use or misuse of the data.

COPYRIGHT © 2024 BHC CONSULTANTS LLC., ALL RIGHTS RESERVED

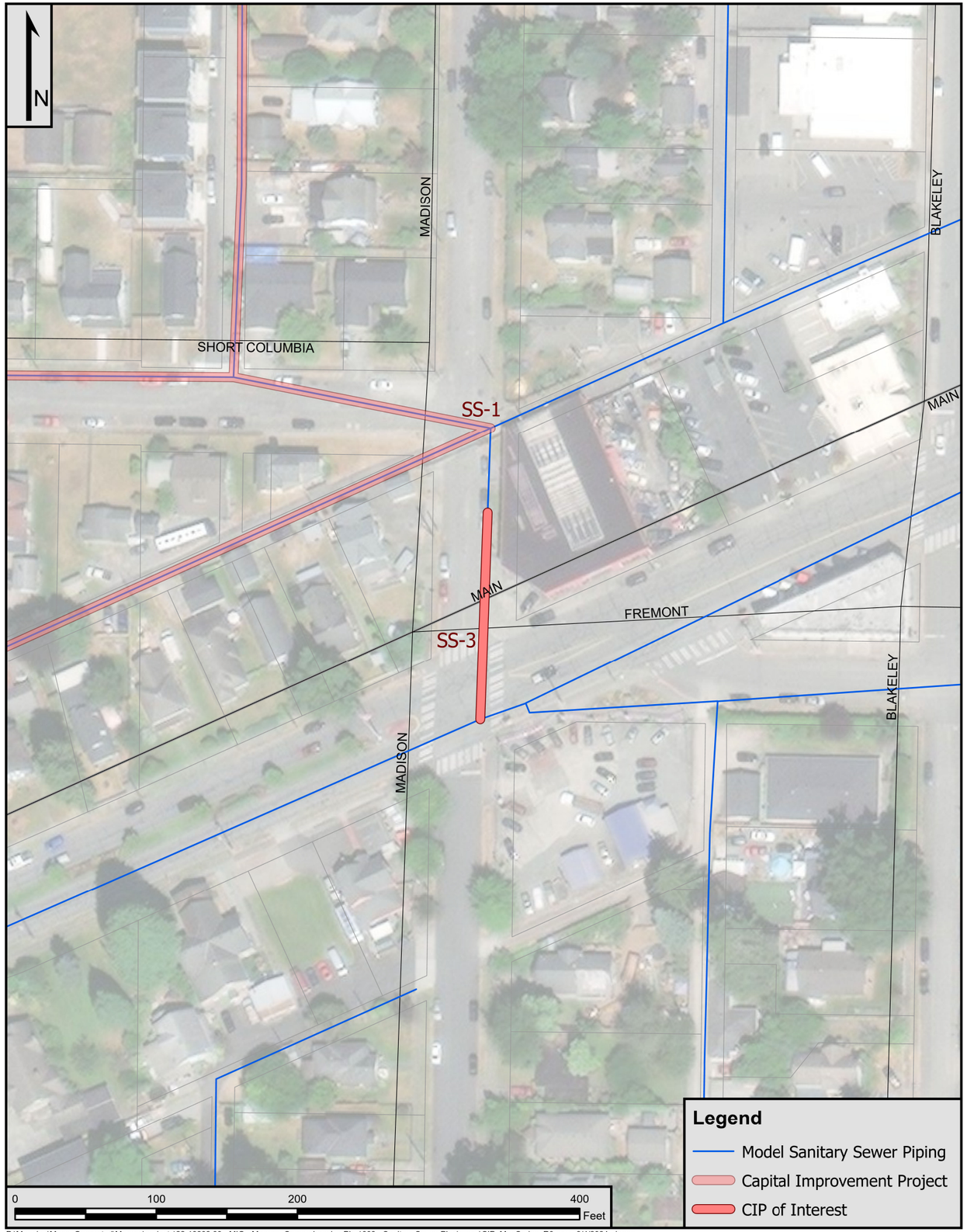

P:\Mapping\Maps_Generated\Monroe\projects\22-10808.00 - MIG - Monroe Comprehensive Plan\003 - Sanitary Sewer Plan\maps\CIP_MapSeries_R0.aprx 9/4/2024 rjones

City of Monroe Utility Plan Update-Sanitary Sewer

Project Name: SS-3

Project Information

Project Description:
$500,000/yr Pipe Replacement Projects-Madison St

Project Duration:	2027-2028	**Length of Pipe:**	140 ft

Special Considerations:
§ Replace and/or upsize the existing 8-inch clay sewer trunk on Madison St between Short Columbia St and W Main St.

Project Location:
North Madison from West Main St north to near Columbia Street.

Estimated Cost Breakdown

Total Opinion of Probable Project Cost	$ 970,000

Assumptions:
Costing is rounded up to the nearest $10,000 and presented as future dollars. Costs were baselined in 2024 dollars, from 2024 for the first 6 years of the Capital Improvement Program an inflation factor of 3.0% was utilized, and for years 7 to 20, an inflation factor of 2.4% was utilized.

City Notes:
Portion of this piping approximately two sticks south of North Madison and Columbia St was replaced as part of a previous effort in this area.

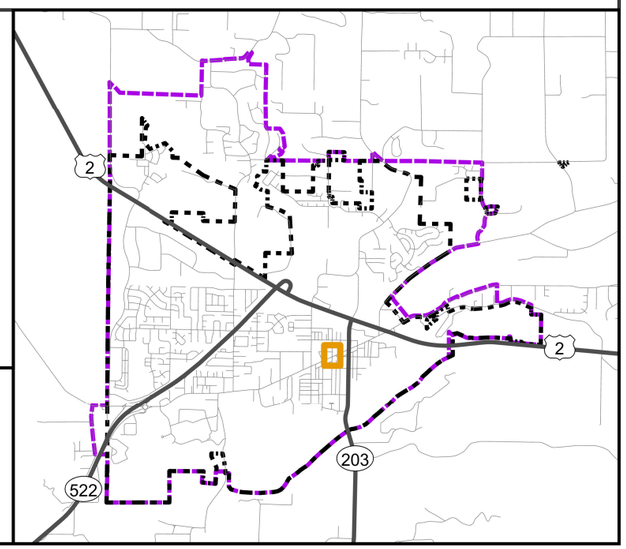

September 2024

Credits: Maxar

Sanitary Sewer System: City of Monroe 2023 and 2024

Snohomish County base data 2023

Data sources supplied may not reflect current or actual conditions. This map is a geographic representation based on information available. It does not represent survey data. No warranty is made concerning the accuracy, currency, or completeness of data depicted on this map. BHC Consultants LLC., assumes no responsibility for the validity of any information presented herein, nor any responsibility for the use or misuse of the data.

COPYRIGHT © 2024 BHC CONSULTANTS LLC., ALL RIGHTS RESERVED

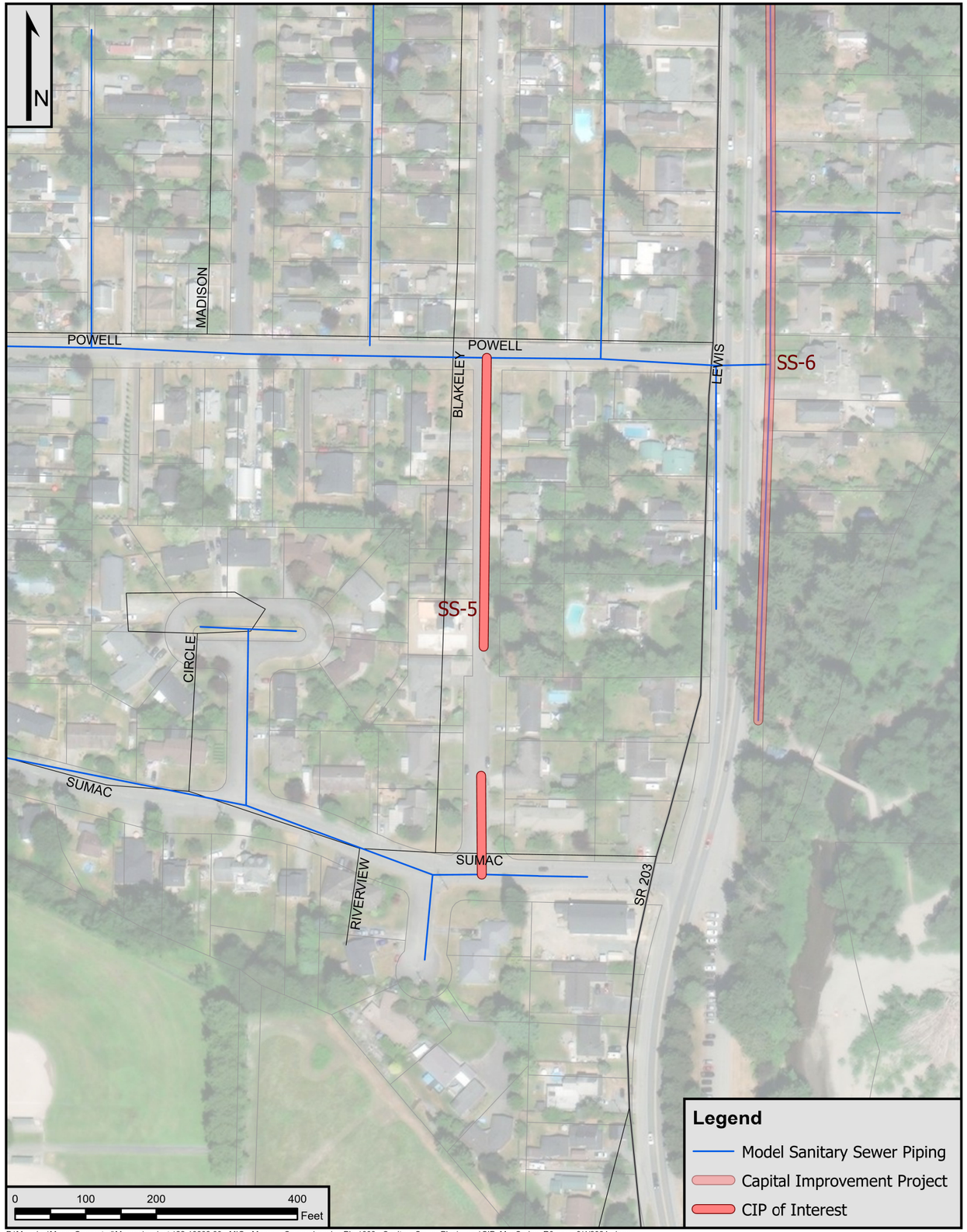

P:\Mapping\Maps_Generated\Monroe\projects\22-10808.00 - MIG - Monroe Comprehensive Plan\003 - Sanitary Sewer Plan\maps\CIP_MapSeries_R0.aprx 9/4/2024 rjones

City of Monroe Utility Plan Update-Sanitary Sewer

Project Name: SS-5

Project Information

Project Description:
$500,000/yr. Pipe Replacement Projects-S Blakely St

Project Duration:	2028-2029	**Length of Pipe:**	540 ft

Special Considerations:
§ Replace and/or upsize the existing 8-inch clay sewer trunk on S Blakely St between Powell St and Sumac Dr.

Project Location:
Piping along South Blakeley Street from Sumac Drive north to Powell Street.

Estimated Cost Breakdown

Total Opinion of Probable Project Cost	$ 640,000

Assumptions:
Costing is rounded up to the nearest $10,000 and presented as future dollars. Costs were baselined in 2024 dollars, from 2024 for the first 6 years of the Capital Improvement Program an inflation factor of 3.0% was utilized, and for years 7 to 20, an inflation factor of 2.4% was utilized.

City Notes:

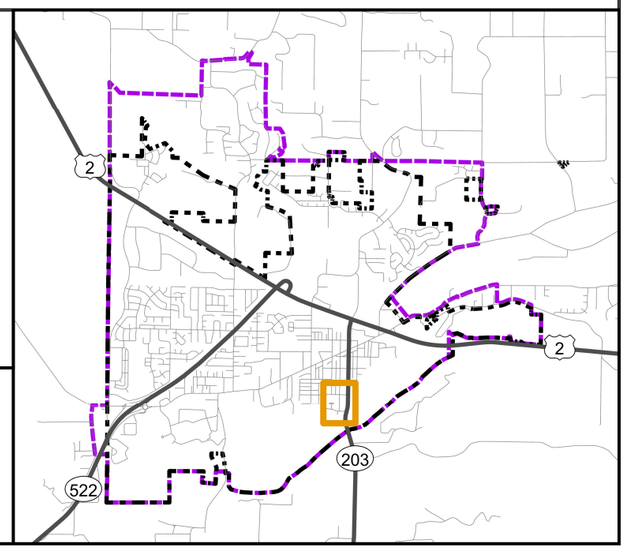

bhc CONSULTANTS
September 2024

Credits: Maxar

Sanitary Sewer System: City of Monroe 2023 and 2024

Snohomish County base data 2023

Data sources supplied may not reflect current or actual conditions. This map is a geographic representation based on information available. It does not represent survey data. No warranty is made concerning the accuracy, currency, or completeness of data depicted on this map. BHC Consultants LLC., assumes no responsibility for the validity of any information presented herein, nor any responsibility for the use or misuse of the data.

COPYRIGHT © 2024 BHC CONSULTANTS LLC., ALL RIGHTS RESERVED

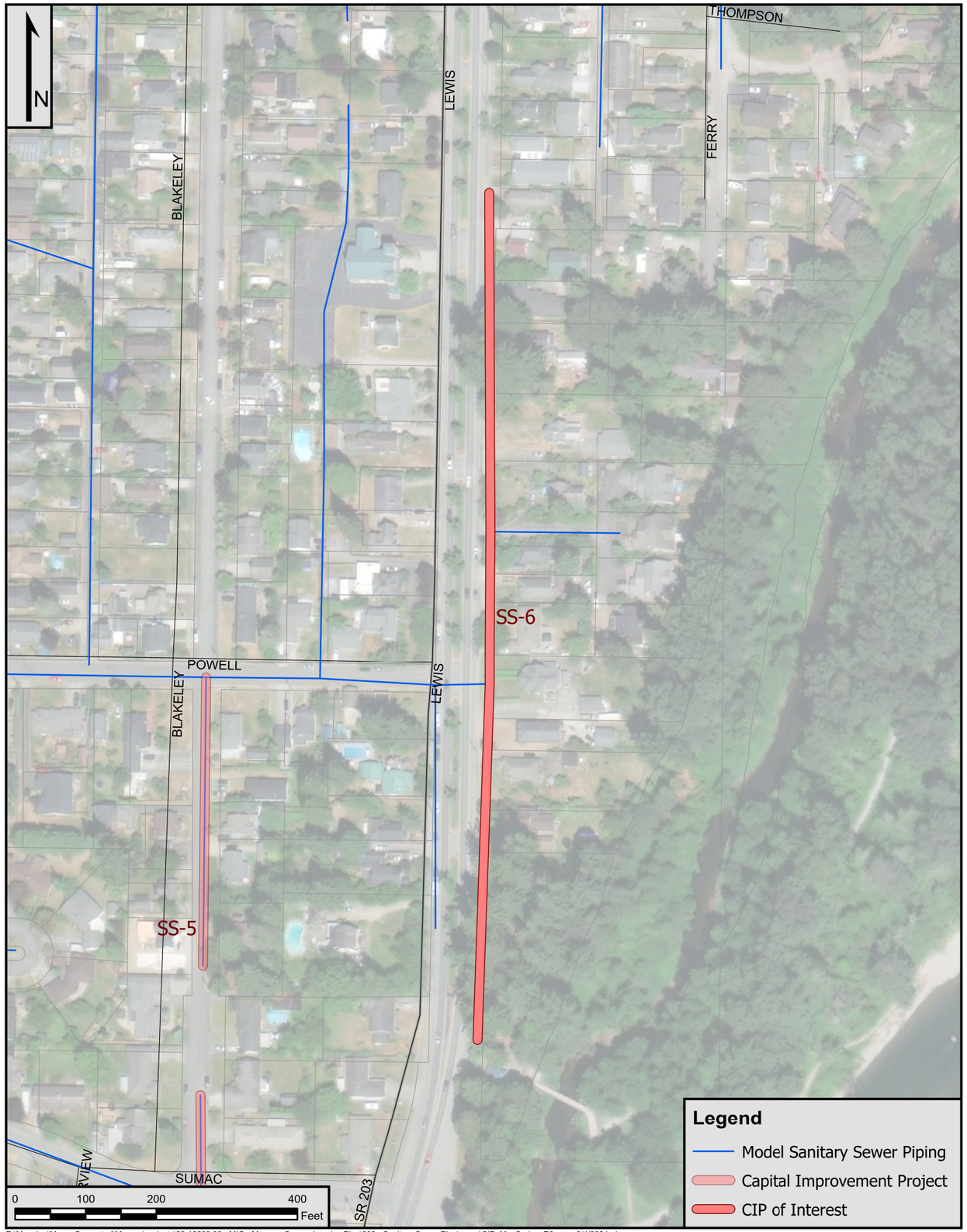

P:\Mapping\Maps_Generated\Monroe\projects\22-10808.00 - MIG - Monroe Comprehensive Plan\003 - Sanitary Sewer Plan\maps\CIP_MapSeries_R0.aprx 9/4/2024 rjones

City of Monroe Utility Plan Update-Sanitary Sewer

Project Name: SS-6

Project Information

Project Description:
$500,000/yr. Pipe Replacement Projects-S. Lewis St

Project Duration:	2029-2030	**Length of Pipe:**	1,200 ft

Special Considerations:
§ Replace and/or upsize the existing 8-inch sewer trunk on S Lewis St between W Dougall St and Sumac Dr.

Project Location:
Piping along South Lewis Street from Al Borlin Park trail extending north and terminating between Powell St and McDougall St.

Estimated Cost Breakdown

Total Opinion of Probable Project Cost	$ 750,000

Assumptions:
Costing is rounded up to the nearest $10,000 and presented as future dollars. Costs were baselined in 2024 dollars, from 2024 for the first 6 years of the Capital Improvement Program an inflation factor of 3.0% was utilized, and for years 7 to 20, an inflation factor of 2.4% was utilized.

City Notes:

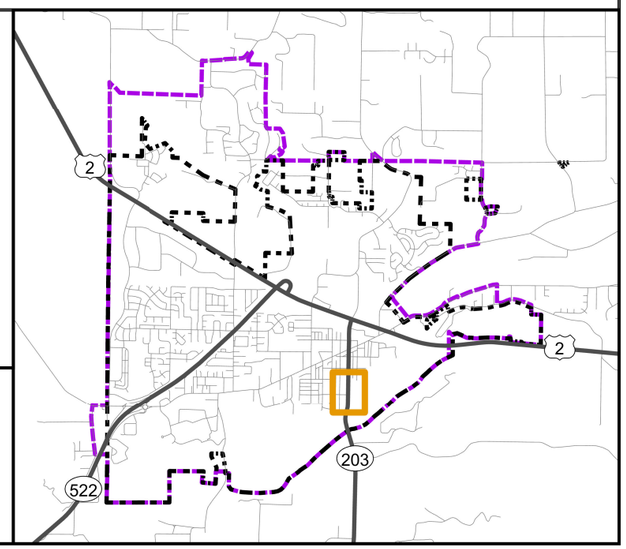

bhc CONSULTANTS
September 2024

Credits: Maxar

Sanitary Sewer System: City of Monroe 2023 and 2024

Snohomish County base data 2023

Data sources supplied may not reflect current or actual conditions. This map is a geographic representation based on information available. It does not represent survey data. No warranty is made concerning the accuracy, currency, or completeness of data depicted on this map. BHC Consultants LLC., assumes no responsibility for the validity of any information presented herein, nor any responsibility for the use or misuse of the data.

COPYRIGHT © 2024 BHC CONSULTANTS LLC., ALL RIGHTS RESERVED



City of Monroe Utility Plan Update - Sewer

Project Name: SS-13 Solids Treatment and Handling Upgrades

Project Information

Project Description:
This project replaces the existing belt filter press with a new centrifuge and sludge dryer. The existing dewatering building will be demolished and replaced with a new building. The centrifuge and ancillary support equipment will be located atop a mezzanine level. Dewatered sludge will be discharged from the centrifuge to a storage hopper below. A progressive cavity pump will feed dewatered sludge to the dryer. Dried sludge will be conveyed to a roll off container for hauling.

Project Duration: 2025-2026

Special Considerations:
This project is currently under design through the DES process, with Trane acting as the general contractor. Bids were solicited in July 2024. Costs are based on the City's planning level costs and should be updated once bids are received, and Trane finalizes the design build proposal.

Project Location:
Wastewater Treatment Plant

Estimated Cost Breakdown

Total Opinion of Probable Project Cost	$29,250,000

Assumptions:
Costing is rounded up to the nearest $10,000 and presented as future dollars. Costs were baselined in 2024 dollars, from 2024 for the first 6 years of the Capital Improvement Program an inflation factor of 3.0% was utilized, and for years 7 to 20, an inflation factor of 2.4% was utilized.

City Notes:

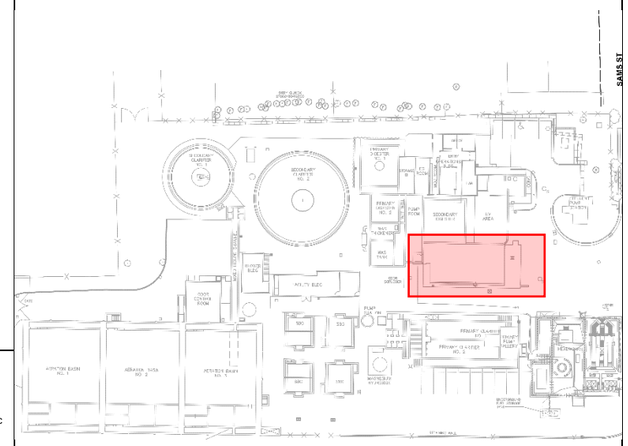

Wastewater Treatment Plant: City of Monroe Record Drawings

Data sources supplied may not reflect current or actual conditions. This map is a geographic representation based on information available. It does not represent survey data. No warranty is made concerning the accuracy, currency, or completeness of data depicted on this map. BHC Consultants LLC assumes no responsibility for the use or misuse of this data.

September 2024

COPYRIGHT © 2024 BHC CONSULTANTS LLC., ALL RIGHTS RESERVED

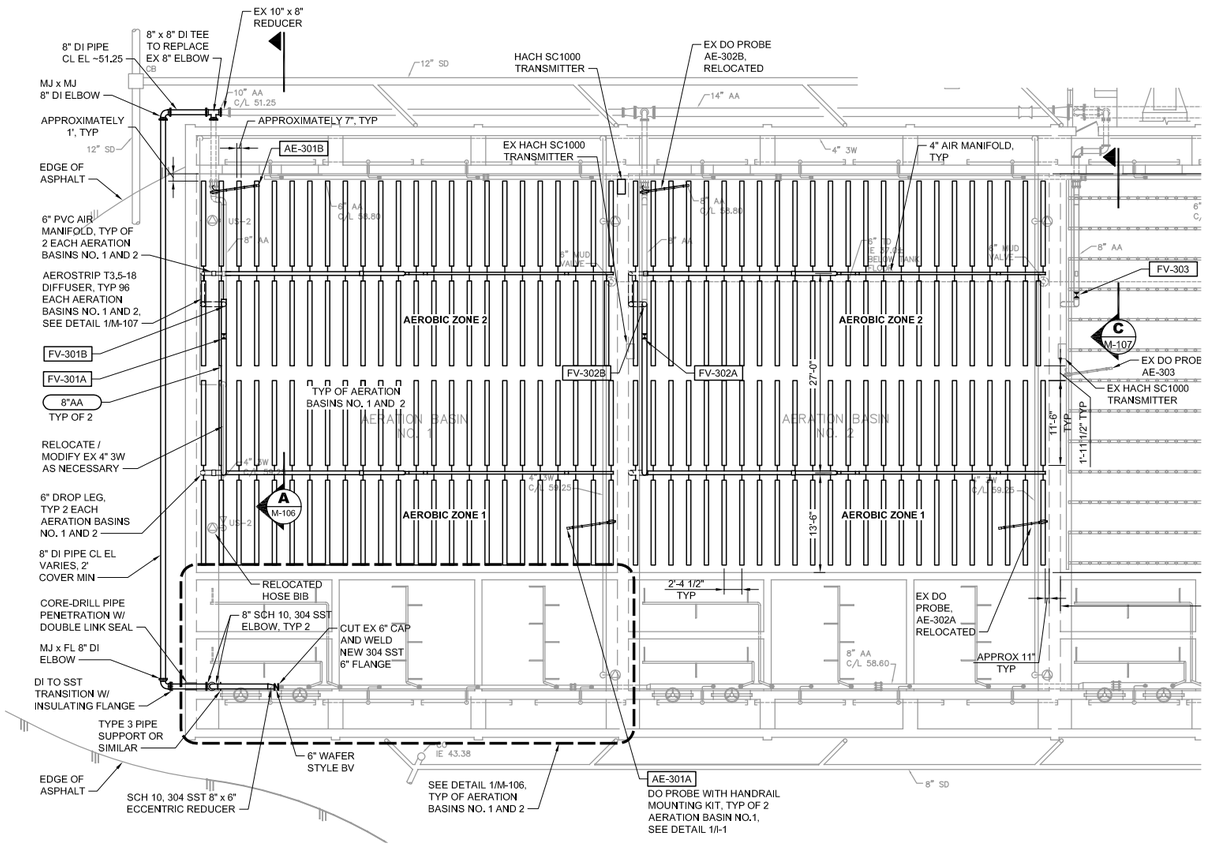

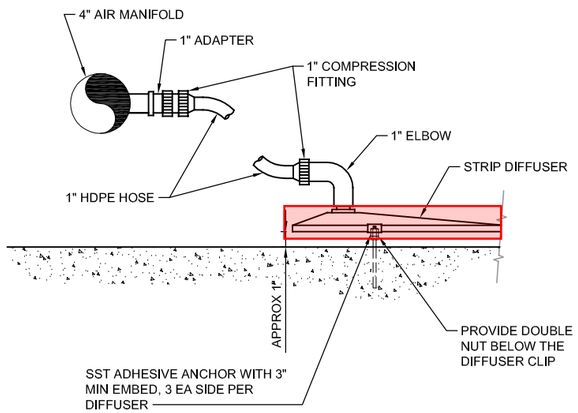

City of Monroe Utility Plan Update - Sewer

Project Name: SS-14 Aeration Basin Diffuser Replacement

Project Information

Project Description:
The existing aeration basin diffuser membranes have reached the end of their useful lifespan and are in need of replacement. This project replaces the existing diffuser membranes.

Project Duration: 2029

Special Considerations:
The aeration basins will need to be taken offline and fully drained for the diffuser membranes to be replaced. During this time it is suggested that the tank piping is inspected. If any deficiencies such as concrete cracks or pipe corrosion are found, those should be addressed while the tank is empty.

Project Location:
Wastewater Treatment Plant

Estimated Cost Breakdown

Total Opinion of Probable Project Cost	$210,000

Assumptions:
Costing is rounded up to the nearest $10,000 and presented as future dollars. Costs were baselined in 2024 dollars, from 2024 for the first 6 years of the Capital Improvement Program an inflation factor of 3.0% was utilized, and for years 7 to 20, an inflation factor of 2.4% was utilized.

City Notes:

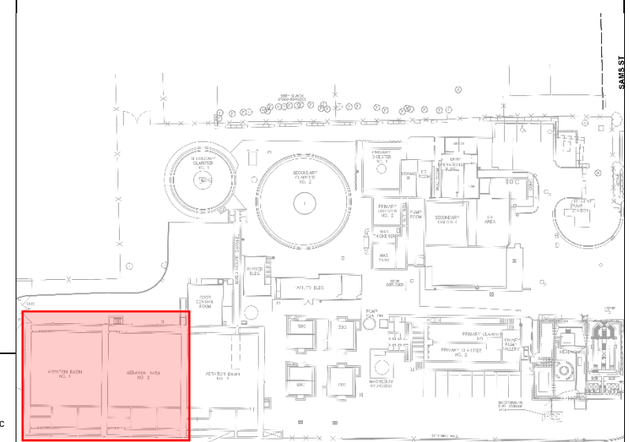

Wastewater Treatment Plant: City of Monroe Record Drawings

Data sources supplied may not reflect current or actual conditions. This map is a geographic representation based on information available. It does not represent survey data. No warranty is made concerning the accuracy, currency, or completeness of data depicted on this map. BHC Consultants LLC assumes no responsibility for the use or misuse of this data.

September 2024

COPYRIGHT © 2024 BHC CONSULTANTS LLC., ALL RIGHTS RESERVED

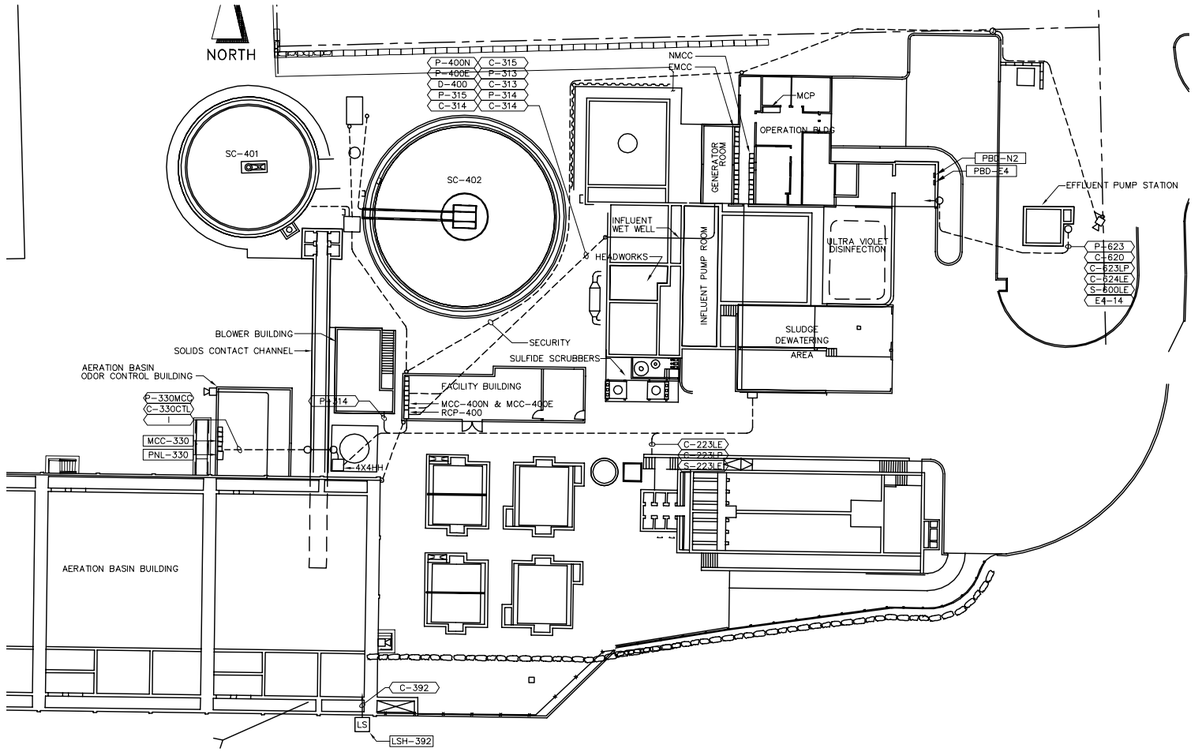

City of Monroe Utility Plan Update - Sewer

Project Name: SS-15 Plantwide SCADA and Control Upgrades

Project Information

Project Description:
The existing plant PLCs and MCCs are nearing the end of their useful service life and in need of replacement. This project replaces aging equipment and provides for minor upgrades to process controls.

Project Duration: 2029-2030

Special Considerations:
PLC and MCC replacements should be coordinated with other major plant upgrade projects.

Project Location:
Wastewater Treatment Plant

Estimated Cost Breakdown

Total Opinion of Probable Project Cost	$1,950,000

Assumptions:
Costing is rounded up to the nearest $10,000 and presented as future dollars. Costs were baselined in 2024 dollars, from 2024 for the first 6 years of the Capital Improvement Program an inflation factor of 3.0% was utilized, and for years 7 to 20, an inflation factor of 2.4% was utilized.

City Notes:

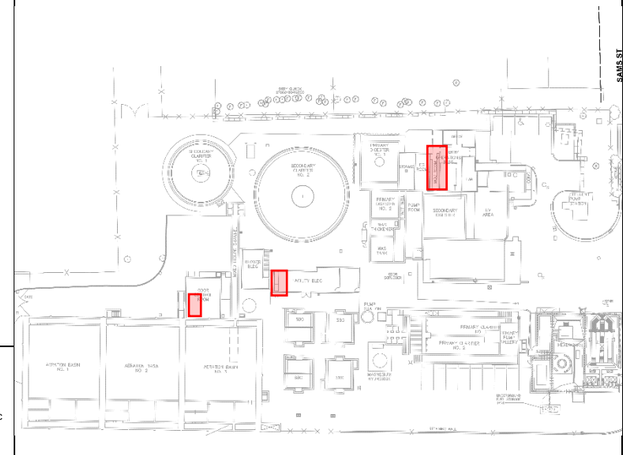

Wastewater Treatment Plant: City of Monroe Record Drawings

Data sources supplied may not reflect current or actual conditions. This map is a geographic representation based on information available. It does not represent survey data. No warranty is made concerning the accuracy, currency, or completeness of data depicted on this map. BHC Consultants LLC assumes no responsibility for the use or misuse of this data.

September 2024

COPYRIGHT © 2024 BHC CONSULTANTS LLC., ALL RIGHTS RESERVED

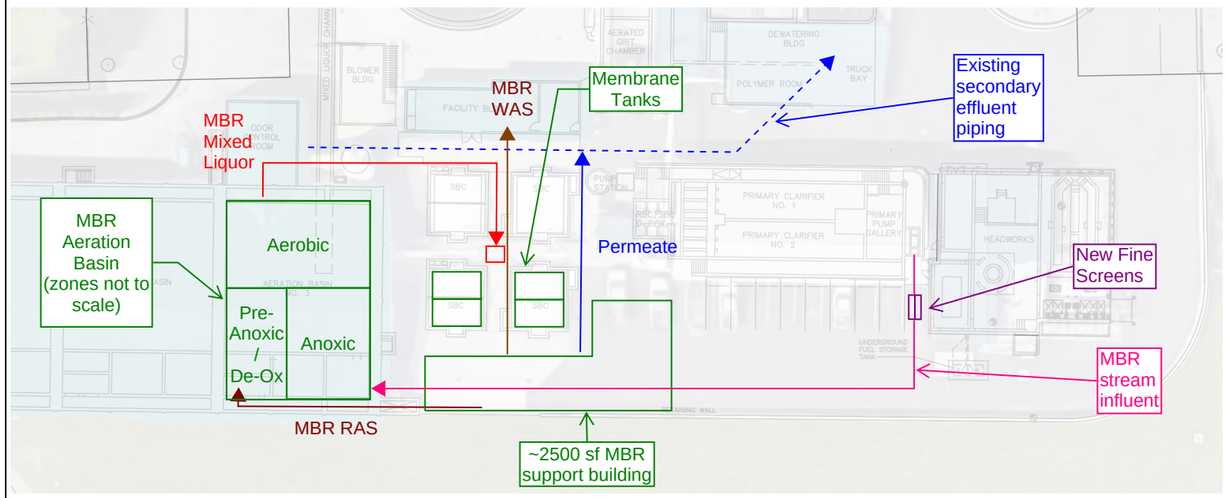

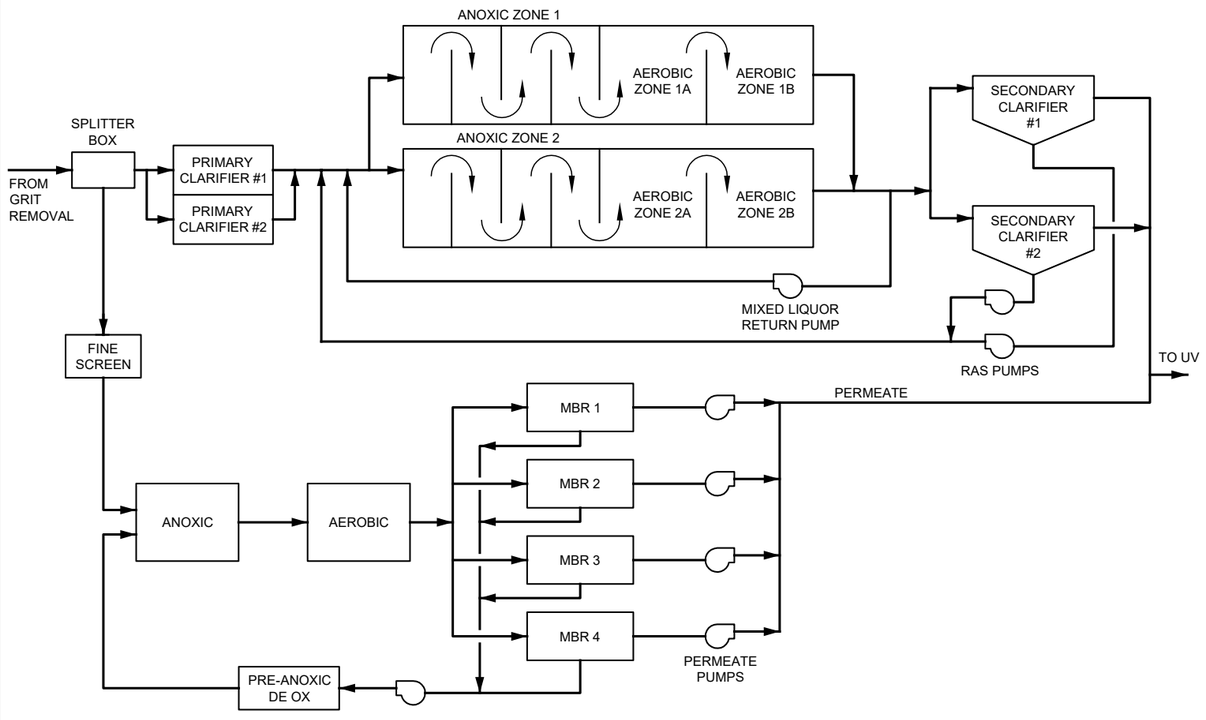

City of Monroe Utility Plan Update - Sewer

Project Name: SS-16 Secondary Treatment Upgrades

Project Information

Project Description:
The secondary treatment process is projected to be nearing capacity within the 20-year planning horizon. Additionally, nutrient removal requirements are anticipated in the future. A side stream membrane bioreactor will be installed, using Aeration Basin #3 as treatment volume and the existing SBC tanks to house membrane units. A new membrane support building will also be constructed to house additional blowers, pumps, and membrane cleaning equipment.

Project Duration: 2029-2030

Special Considerations:
This is a large-scale project driven largely by the need for increased secondary treatment capacity due to loading limits on the secondary clarifiers, but also by future regulations. Additional capacity due to clarifier loading is anticipated to be needed at a max month flow of 2.6 mgd or peak hour flow of 5.1 mgd. These flows are projected to be realized in 2038 and 2035 respectively.
The DOC pretreatment lagoons being taken offline may increase overall WWTP loading, which would increase secondary clarifier loading at the same flows. This may further contribute to the need for additional capacity earlier than discussed above.

Project Location:
Wastewater Treatment Plant

Estimated Cost Breakdown

Total Opinion of Probable Project Cost	$23,100,000

Assumptions:
Costing is rounded up to the nearest $10,000 and presented as future dollars. Costs were baselined in 2024 dollars, from 2024 for the first 6 years of the Capital Improvement Program an inflation factor of 3.0% was utilized, and for years 7 to 20, an inflation factor of 2.4% was utilized.

City Notes:

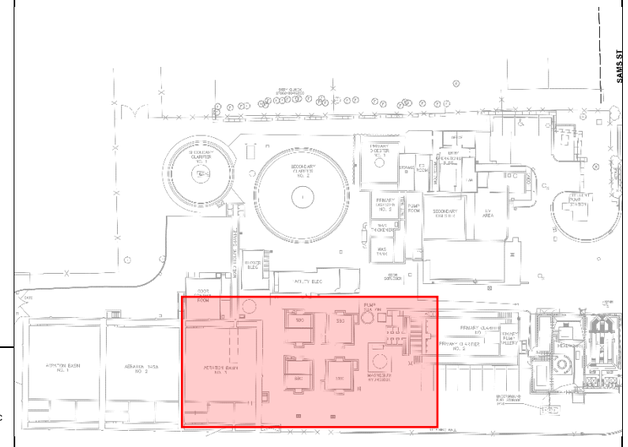

Wastewater Treatment Plant: City of Monroe Record Drawings

Data sources supplied may not reflect current or actual conditions. This map is a geographic representation based on information available. It does not represent survey data. No warranty is made concerning the accuracy, currency, or completeness of data depicted on this map. BHC Consultants LLC assumes no responsibility for the use or misuse of this data.

September 2024

COPYRIGHT © 2024 BHC CONSULTANTS LLC., ALL RIGHTS RESERVED



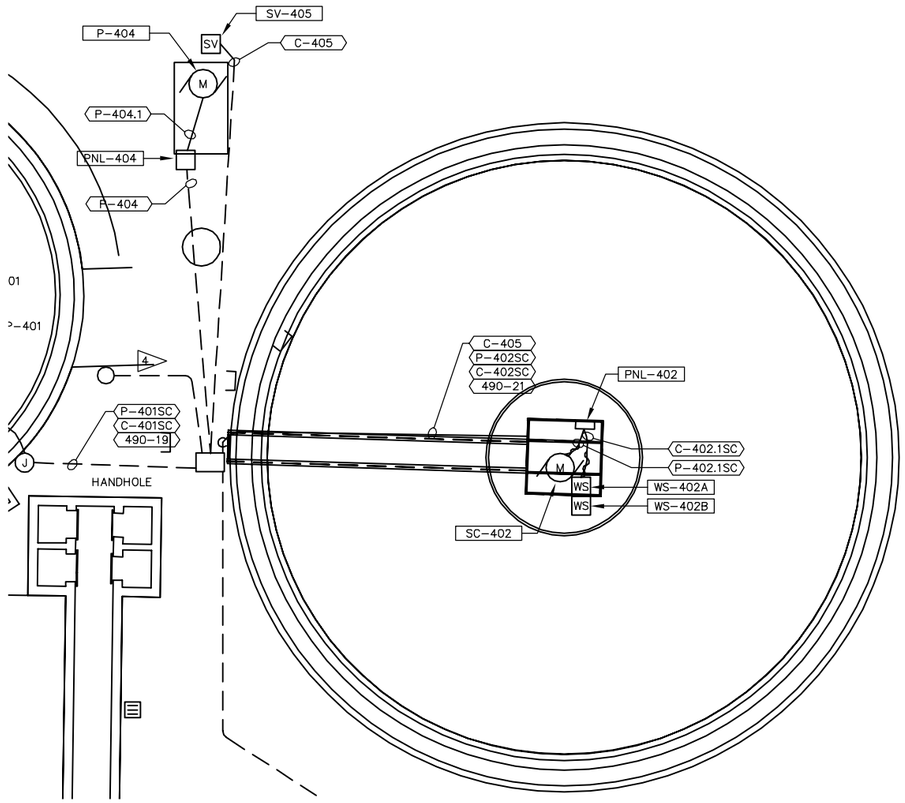

City of Monroe Utility Plan Update - Sewer

Project Name: SS-17 CL402 Gearbox Replacement

Project Information

Project Description:
The gearbox for the clarifier drive mechanism on Clarifier No. 2 is aging and in need of replacement. This project replaces the gearbox.

Project Duration: 2025

Special Considerations:
N/A

Project Location:
Wastewater Treatment Plant

Estimated Cost Breakdown

Total Opinion of Probable Project Cost	$110,000

Assumptions:
costing is rounded up to the nearest $10,000 and presented as future dollars. Costs were baselined in 2024 dollars, from 2024 for the first 6 years of the Capital Improvement Program an inflation factor of 3.0% was utilized, and for years 7 to 20, an inflation factor of 2.4% was utilized.

City Notes:

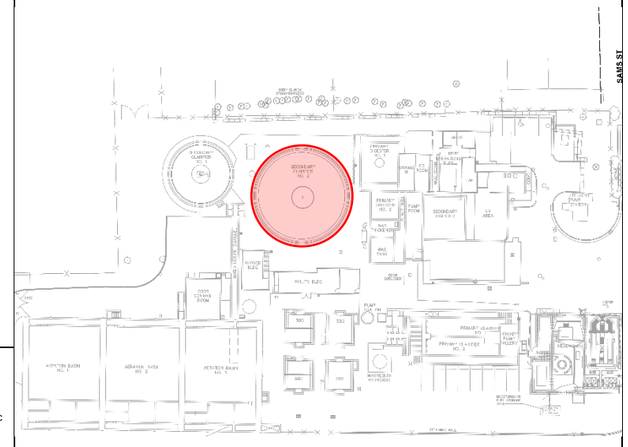

Wastewater Treatment Plant: City of Monroe Record Drawings

Data sources supplied may not reflect current or actual conditions. This map is a geographic representation based on information available. It does not represent survey data. No warranty is made concerning the accuracy, currency, or completeness of data depicted on this map. BHC Consultants LLC assumes no responsibility for the use or misuse of this data.

September 2024

COPYRIGHT © 2024 BHC CONSULTANTS LLC., ALL RIGHTS RESERVED

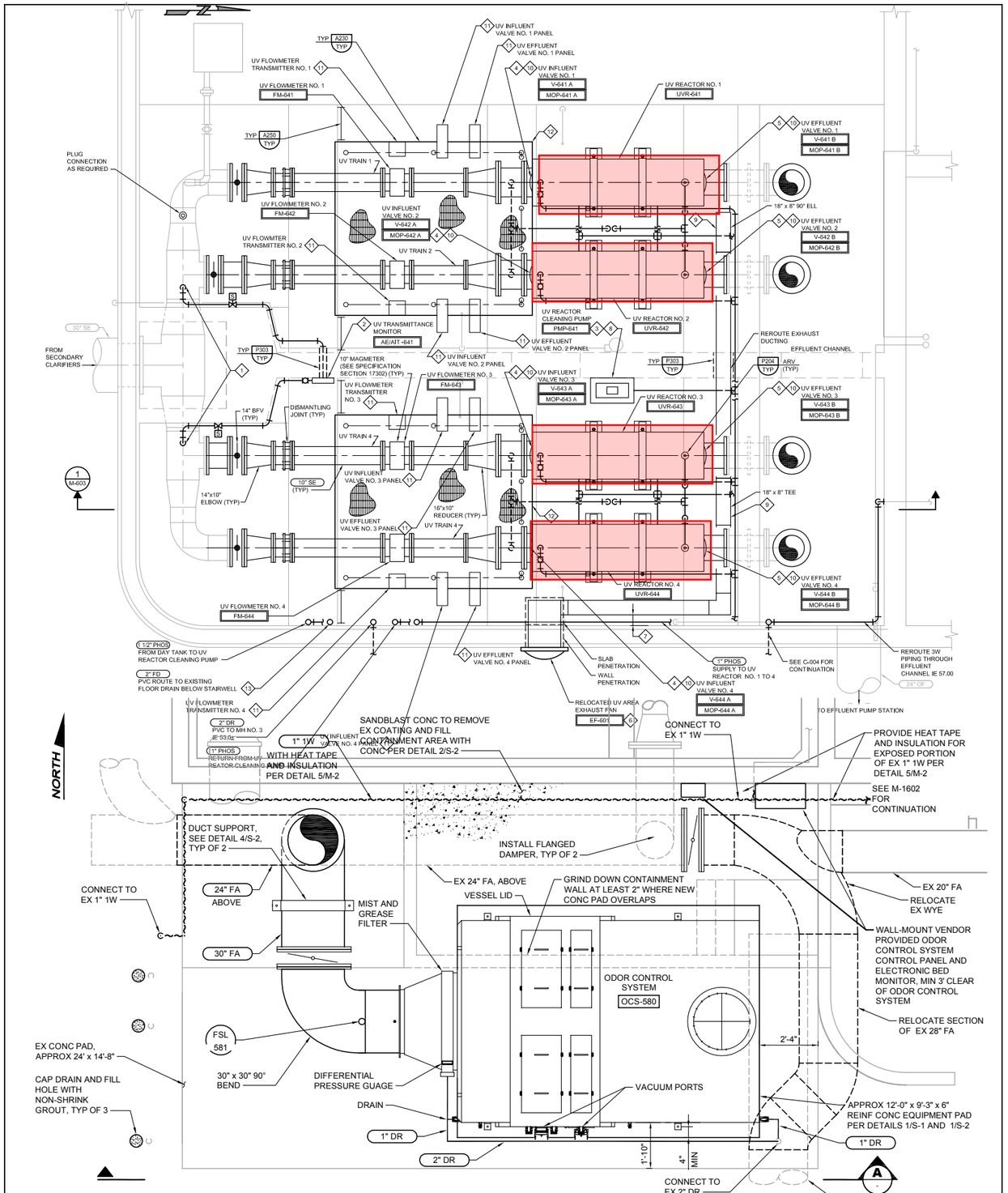

T:\Projects\Monroe\2022-Comp Plan\Utility Plans\Sewer Plan\Sewer Plan Chapters\Chapter SS11 - Capital Improvements Plan\WWTP Summary Sheets\SS-18 UV Rebuild and Scrubber Media.docx 9/1/24 cbryant

City of Monroe Utility Plan Update - Sewer

Project Name: SS-18 UV Rebuild and Scrubber Media

Project Information

Project Description:
The UV disinfection system requires periodic replacement of bulbs, while the odor scrubber requires periodic replacement of media. This project allocates funds for self-performed maintenance on these items.

Project Duration: 2025-2030

Special Considerations:
N/A

Project Location:
Wastewater Treatment Plant

Estimated Cost Breakdown

Total Opinion of Probable Project Cost	$660,000

Assumptions:
Costing is rounded up to the nearest $10,000 and presented as future dollars. Costs were baselined in 2024 dollars, from 2024 for the first 6 years of the Capital Improvement Program an inflation factor of 3.0% was utilized, and for years 7 to 20, an inflation factor of 2.4% was utilized.

City Notes:

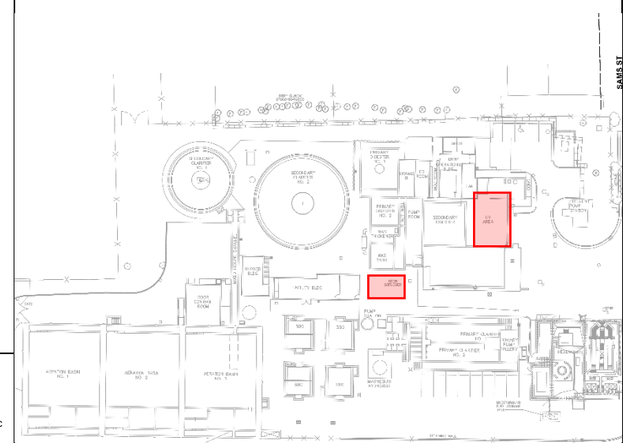

Wastewater Treatment Plant: City of Monroe Record Drawings

September 2024

Data sources supplied may not reflect current or actual conditions. This map is a geographic representation based on information available. It does not represent survey data. No warranty is made concerning the accuracy, currency, or completeness of data depicted on this map. BHC Consultants LLC assumes no responsibility for the use or misuse of this data.

COPYRIGHT © 2024 BHC CONSULTANTS LLC., ALL RIGHTS RESERVED



City of Monroe Utility Plan Update - Sewer

Project Name: SS-19 WWTP Rerating Study

Project Information

Project Description:
The existing WWTP is rated for a max month design capacity of 2.84 mgd, 6,090 lbs/day of BOD, and 5,940 lbs/day of TSS. If loading exceeds 85% of these values for three consecutive months, planning for additional capacity must begin.

Project Duration: 2030

Special Considerations:
Sufficient capacity is likely to be already present, but it has not been quantified in an Engineering Report. This project would study a more updated version of the overall plant capacity. It is only anticipated that this would be needed if the DOC lagoons are brought offline. Additionally, if secondary treatment upgrades are implemented, the rerating study would no longer be necessary as design would be based on future capacity.

Project Location:
Wastewater Treatment Plant

Estimated Cost Breakdown

Total Opinion of Probable Project Cost	$30,000

Assumptions:
Costing is rounded up to the nearest $10,000 and presented as future dollars. Costs were baselined in 2024 dollars, from 2024 for the first 6 years of the Capital Improvement Program an inflation factor of 3.0% was utilized, and for years 7 to 20, an inflation factor of 2.4% was utilized.

City Notes:

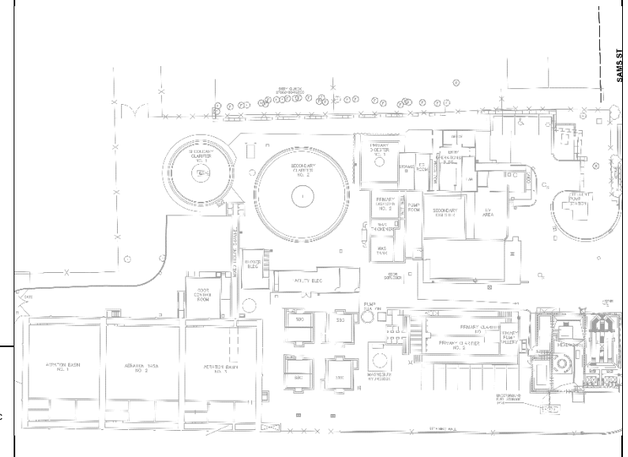

Wastewater Treatment Plant: City of Monroe Record Drawings

Data sources supplied may not reflect current or actual conditions. This map is a geographic representation based on information available. It does not represent survey data. No warranty is made concerning the accuracy, currency, or completeness of data depicted on this map. BHC Consultants LLC assumes no responsibility for the use or misuse of this data.

September 2024

COPYRIGHT © 2024 BHC CONSULTANTS LLC., ALL RIGHTS RESERVED

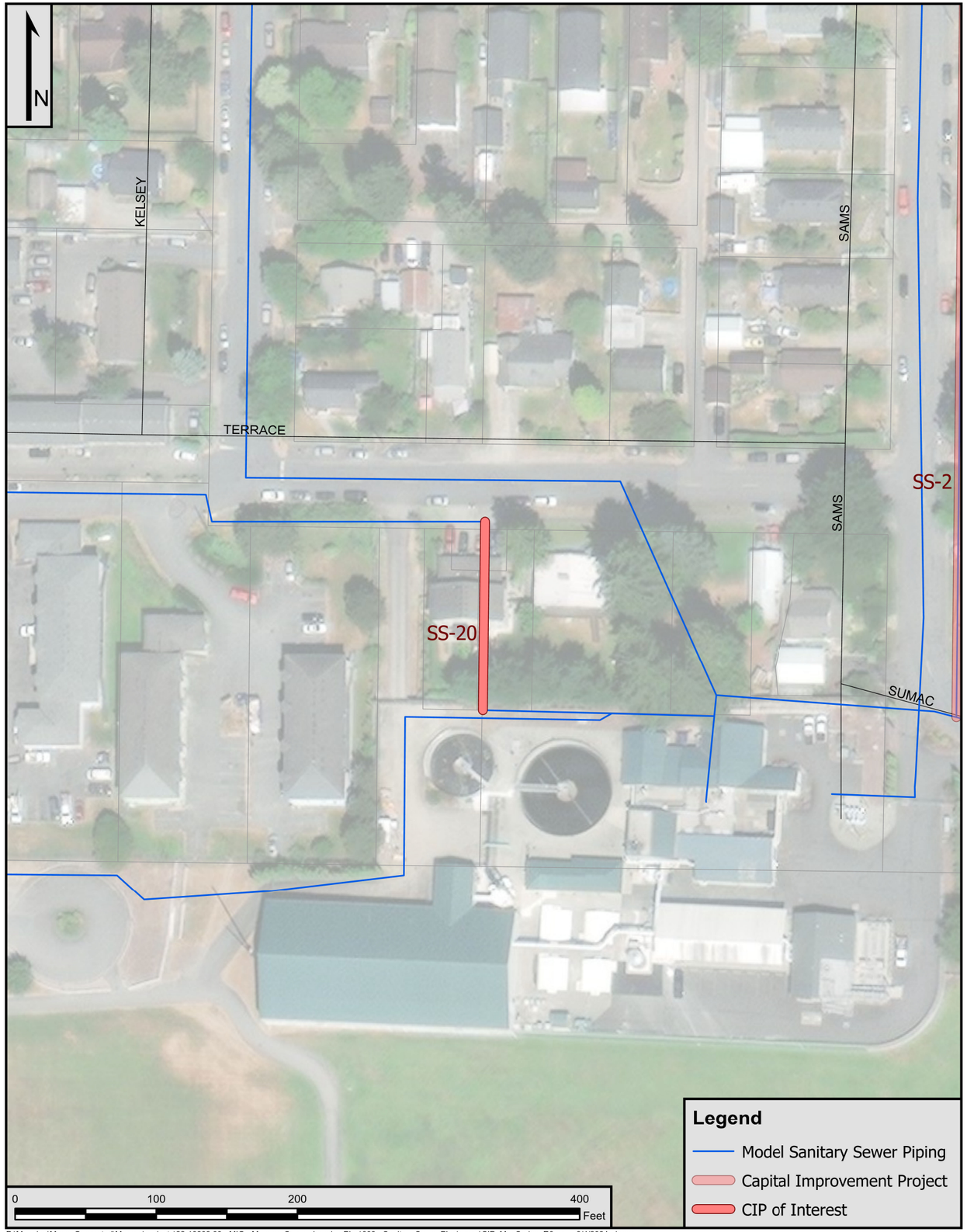

P:\Mapping\Maps_Generated\Monroe\projects\22-10808.00 - MIG - Monroe Comprehensive Plan\003 - Sanitary Sewer Plan\maps\CIP_MapSeries_R0.aprx 9/4/2024 rjones

City of Monroe Utility Plan Update-Sanitary Sewer

Project Name: SS-20

Project Information

Project Description:
179th FM Terrace near WWTP

Project Duration:	2028-2029	**Length of Pipe:**	140 ft

Special Considerations:
§ Replace portion of 179th FM. The existing forcemain is underneath a structure, the proposed forcemain will be rerouted around this structure along South Kelsey St.

Project Location:
Reroute piping along to be along South Kelsey St from Powell St south to Terrace St and then connect to the WWTP.

Estimated Cost Breakdown

Total Opinion of Probable Project Cost	$ 200,000

Assumptions:
Costing is rounded up to the nearest $10,000 and presented as future dollars. Costs were baselined in 2024 dollars, from 2024 for the first 6 years of the Capital Improvement Program an inflation factor of 3.0% was utilized, and for years 7 to 20, an inflation factor of 2.4% was utilized.

City Notes:

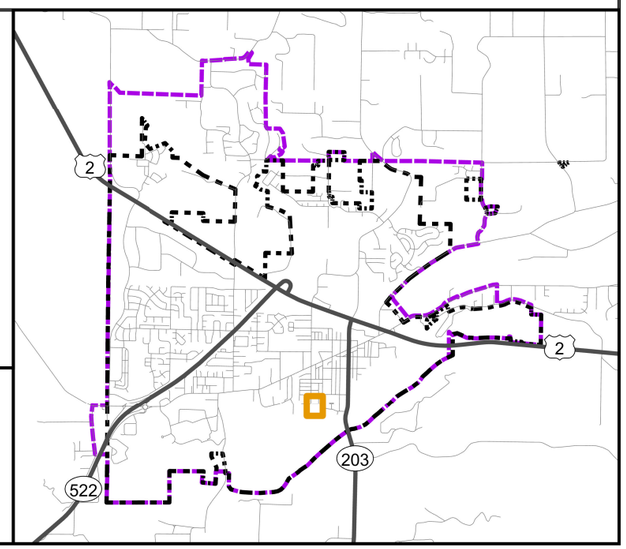

September 2024

Credits: Maxar

Sanitary Sewer System: City of Monroe 2023 and 2024

Snohomish County base data 2023

Data sources supplied may not reflect current or actual conditions. This map is a geographic representation based on information available. It does not represent survey data. No warranty is made concerning the accuracy, currency, or completeness of data depicted on this map. BHC Consultants LLC., assumes no responsibility for the validity of any information presented herein, nor any responsibility for the use or misuse of the data.

COPYRIGHT © 2024 BHC CONSULTANTS LLC., ALL RIGHTS RESERVED

Chapter SW 4 Existing Stormwater Facilities

SW 4.1 Introduction

This Chapter describes the study area, drainage basins within City limits, and the City's existing stormwater system. Detailed discussions of the Stormwater Management Utility's current and future services are presented in Chapters SW 5 and SW 7, respectively.

SW 4.2 Study Area General Description

The City is located 14 miles southeast of Everett on the Skykomish River in Snohomish County. The City encompasses an area of 6.4 square miles and lies within three drainage basins: Woods Creek, French Creek, and the Skykomish River. Figure SW 4-1 illustrates the City limits and the Urban Growth Boundary in relation to the drainage basins.

The climate in City tends to be moderate year-round, with an average annual rainfall of approximately 49 inches. The average maximum temperature is 77 degrees Fahrenheit (F) in August, the warmest month. The average minimum temperature is 33 degrees F in December, the coldest month (WRCC, 2024)[1].

SW 4.3 Existing System Description

The City's stormwater system consists of constructed facilities and natural channels that convey and treat stormwater runoff prior to its discharge into receiving waters. The drainage system includes but is not limited to catch basins, pipes, ditches, swales, ponds, vaults, infiltration facilities, and other drainage system components. Portions of the City are underlain with permeable soils that facilitate the infiltration of stormwater runoff. The drainage system is owned and maintained by the City, but there are also privately owned and maintained systems within the City limits.

In 2003, the City began developing a computer-based geographic information system (GIS) as a tool to store, visualize, analyze, and interpret geographic data. The GIS database is actively maintained by the City. Figure SW 4-2 illustrates the current view of the GIS-based stormwater conveyance system. The associated GIS inventory will be incorporated as part of this Plan by reference. The inventory describes the sizes, lengths, and characteristics of facilities that are known to be the responsibility of the City. The following sections describe the constructed drainage system components and provide summary characteristic information.

[1] Western Regional Climate Center (WRCC). (March 2024). Accessed at: https://wrcc.dri.edu/cgi-bin/cliMAIN.pl?wamonr

THIS PAGE INTENTIONALLY BLANK.

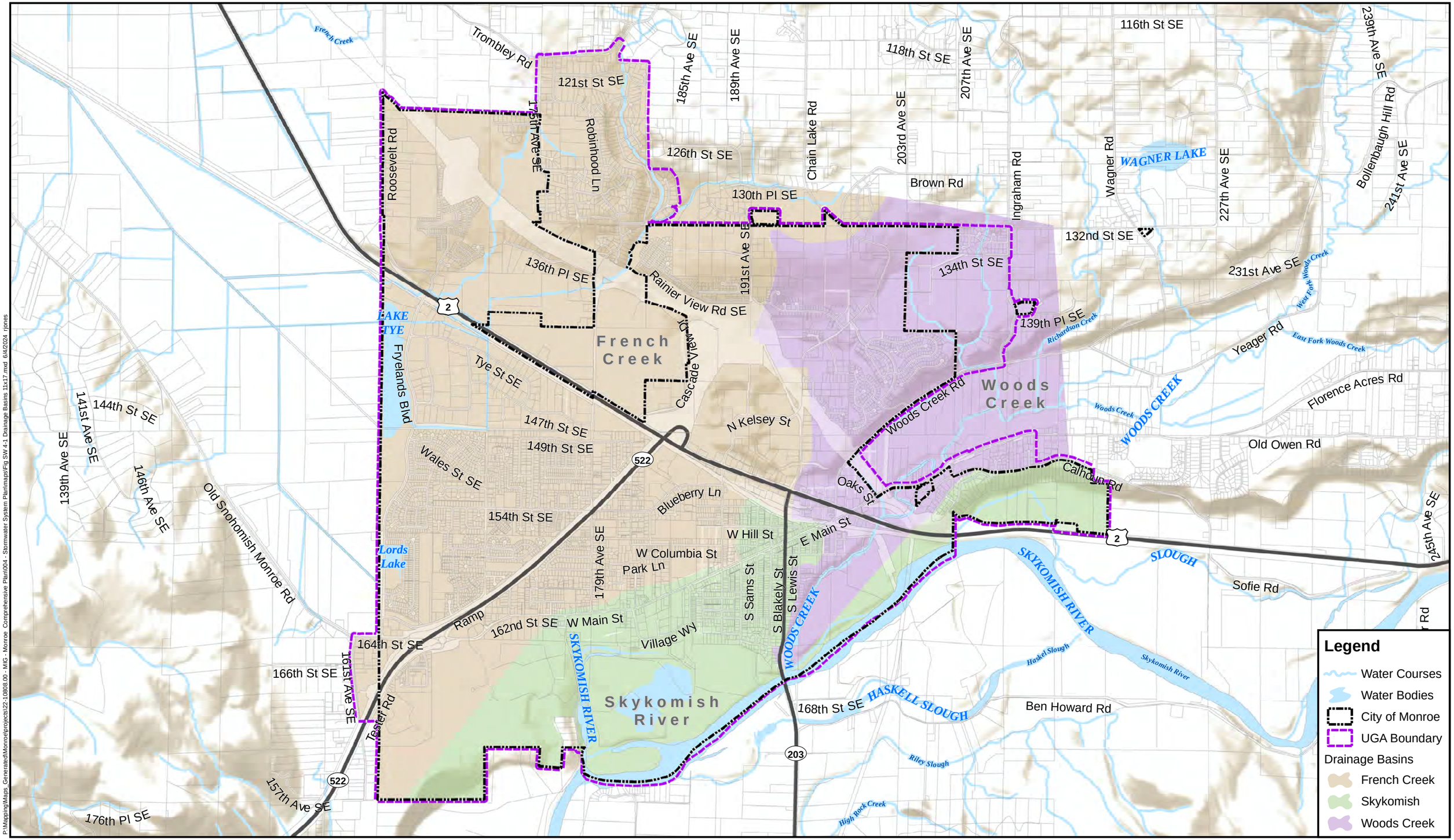

P:\Mapping\Maps_Generated\Monroe\projects\22-10808.00 - MIG - Monroe Comprehensive Plan\004 - Stormwater System Plan\maps\Fig SW 4-1 Drainage Basins 11x17.mxd 6/4/2024 rjones

bhc CONSULTANTS

Stormwater System: City of Monroe 2024

Base Data: Snohomish County 2024

Service Layer Credits: Sources: Esri, USGS, NOAA

Data sources supplied may not reflect current or actual conditions. This map is a geographic representation based on information available. It does not represent survey data. No warranty is made concerning the accuracy, currency, or completeness of data depicted on this map. BHC Consultants LLC., assumes no responsibility for the validity of any information presented herein, nor any responsibility for the use or misuse of the data.

N

0 0.5 1 Miles

MONROE WASHINGTON

Stormwater Drainage Basins

Utility Systems Plan - Stormwater
City of Monroe, Washington
September 2024

Figure
SW 4-1

COPYRIGHT © 2024 BHC CONSULTANTS LLC., ALL RIGHTS RESERVED

THIS PAGE INTENTIONALLY BLANK.

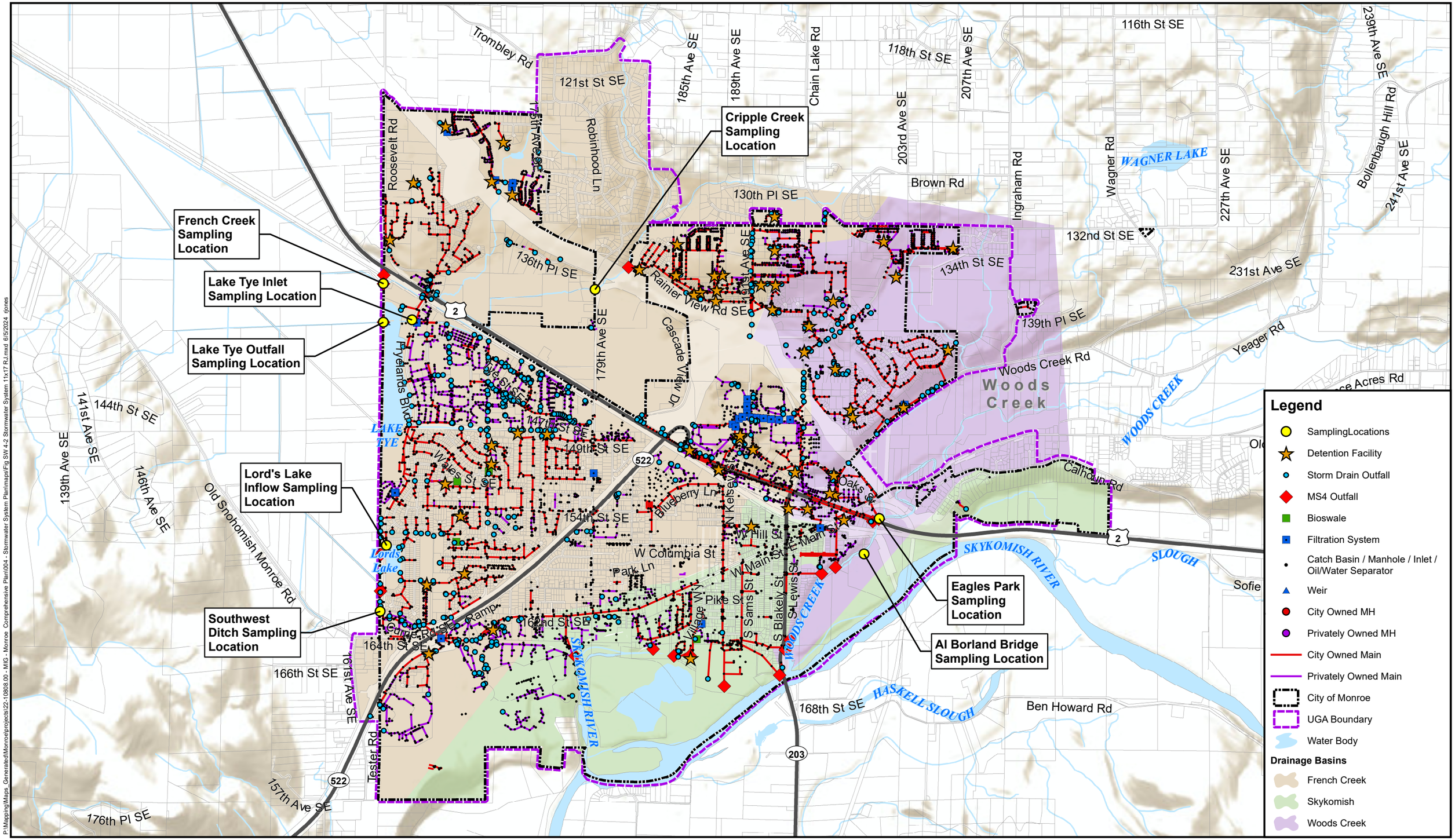

P:\Mapping\Maps_Generated\Monroe\projects\22-10808.00 - MIG - Monroe Comprehensive Plan\004 - Stormwater System Plan\maps\Fig SW 4-2 Stormwater System 11x17 RJ.mxd 6/5/2024 rjones

bhc CONSULTANTS

Stormwater System: City of Monroe 2024

Snohomish County base data 2024

Data sources supplied may not reflect current or actual conditions. This map is a geographic representation based on information available. It does not represent survey data. No warranty is made concerning the accuracy, currency, or completeness of data depicted on this map. BHC Consultants LLC., assumes no responsibility for the validity of any information presented herein, nor any responsibility for the use or misuse of the data.

N

0 0.5 1 Miles

MONROE WASHINGTON

Stormwater System

Utility Systems Plan - Stormwater
City of Monroe, Washington
September 2024

Figure

SW 4-2

COPYRIGHT © 2024 BHC CONSULTANTS LLC., ALL RIGHTS RESERVED

THIS PAGE INTENTIONALLY BLANK.

SW 4.3.1 Stormwater Pipe

Approximately two-thirds of the City's stormwater conveyance system consists of pipe. Pipes range in size from eight inches to 48 inches in diameter and convey stormwater via outfalls into the receiving waters identified in Section SW 4.3.11.

The City owns approximately 78 miles of stormwater pipe with the pipe inventory consisting primarily of polyvinyl chloride (PVC), high-density polyethylene (HDPE), and concrete pipe. Some stormwater pipes are connected to storage or water quality treatment systems. A portion of the downtown area is a combined sanitary/stormwater sewer which discharges to the wastewater treatment plant. The size of the combined system has been reduced since the last comprehensive plan, through capital improvement program (CIP) projects that separate stormwater from sanitary sewer by collecting surface water and directing it into dedicated systems intended only for stormwater, away from the sewer system.

SW 4.3.2 Culverts

Culverts are short sections of pipe used to convey stormwater/streamflow and which generally connect open ditches or streams either under or adjacent to roads. Culverts are commonly comprised of concrete, plastic, or corrugated metal pipe. There are approximately 240 culverts within the City's storm drainage system.

SW 4.3.3 Catch Basins

Catch basins are underground sumps that are used to collect stormwater. In the City, most catch basins discharge directly into a piped conveyance system. The sump at the bottom of a catch basin is used to capture sediment and other debris from incoming stormwater. Some catch basins are equipped with trapped outlets, which prevent most floating debris and oil from leaving the catch basin. The City owns 3,501 catch basins that are connected to stormwater conveyance piping.

A number of catch basins in the City do not connect to a piped storm drain system but instead serve as a point for infiltration of the stormwater runoff. These types of catch basins are called "rock holes" because they are installed with a porous base of rock (gravel), instead of concrete. Rock holes are located in older residential neighborhoods in the southeastern portion of the City between Main Street and the Skykomish River. In 2015, the City owned approximately 25 rock hole catch basins; however, many have since been replaced with new catch basins and connected to the stormwater system. Approximately ten rock holes remain within the City system and it is anticipated that they will be replaced by CIP projects identified in this Plan.

SW 4.3.4 Ditches

Ditches are constructed earth channels lined with vegetation, asphalt, or concrete that convey stormwater in areas not served by piped conveyance systems. The City owns approximately 15 miles of ditches.

SW 4.3.5 Biofiltration Swales

Biofiltration swales are grass-lined, flat-bottomed ditches designed to filter stormwater runoff and provide water quality treatment. They differ from ditches in that the vegetation must be appropriately maintained for the swale to function properly. The shape, slope, width, and length of the swales are specifically designed to achieve appropriate levels of water quality treatment. Most of the biofiltration swales in the stormwater drainage system are privately owned. Privately owned swales are maintained by property owners, whereas City-owned swales are maintained by the City. The City maintains eight biofiltration swales.

SW 4.3.6 Retention/Detention Ponds and Underground Storage Facilities

Retention/detention ponds and underground storage facilities, such as vaults and pipes, store stormwater runoff. The purpose of these facilities is to temporarily store the runoff so that it can be released at a controlled rate to nearby receiving waters or infiltrated into the ground. Retention/detention ponds provide flow control, designed to protect the downstream receiving water bodies from flooding and/or erosion.

When land is developed, and no flow control facilities are installed, both the total volume of runoff and the peak flows increase due to:

- Loss of vegetation, which generally serves to slow the release of runoff.
- Compaction of the soil column, which reduces the potential for infiltration.
- Placement of impervious surfaces (ex., pavement, rooftops, etc.), which intercept rainfall and limit soil infiltration.

The controlled rate of surface water discharge from retention/detention ponds or other storage facilities is designed to mimic the rate of stormwater runoff that occurred from the land prior to development. The retention/detention storage volume is designed based on storing the additional volume of water generated by the post-development land cover, until it can be released at the appropriate/controlled rate. The City maintains 22 detention ponds, five retention ponds, and 20 underground vaults.

SW 4.3.7 Infiltration Trenches

Some locations within the City have soils that are suitable for stormwater infiltration, and as a result, several infiltration trenches have been constructed. The trenches are located underneath and adjacent to City streets and infiltrate locally generated stormwater runoff. Multiple infiltration trenches may be located within a larger infiltration facility, along with water quality pretreatment and an overflow connection to local stormwater or combined piping systems. The stormwater drainage system contains both public and privately owned infiltration facilities. Presently, there are approximately 2.8 miles of infiltration trenches owned by the City.

SW 4.3.8 Oil-Water Separators

Oil-water separators are underground vaults designed to trap sediments, oil, and floatable materials. The inlet and outlet are typically located on opposite ends of the vault, which is also equipped with baffle walls extending above and below the water surface and with a gap above the floor of the vault. Runoff flows underneath the baffles and out of the vault, while the oil floats to the surface and is retained in the vault by the baffle. Some oil-water separators contain a coalescing plate pack designed to reduce the facility footprint. The City maintains 36 oil-water separators and 38 control structures.

SW 4.3.9 Outfalls

The stormwater drainage system discharges to receiving waters in the Woods Creek, French Creek, and Skykomish River watersheds. Outfall locations are shown in Figure SW 4-2.

SW 4.3.10 Water Quality Treatment Filtration Systems

Water quality cartridge filtration systems are used by the City along various storm drain lines. Filters are located on Lewis Street leading to the outfall into Woods Creek at the intersection of South Ann Street and Fremont Street. There are also filters along South Kelsey Street. In 2023, 19 water quality treatment units with a total of 49 cartridge filters were installed part of the Blueberry Lane Stormwater Conveyance and Infiltration project. In all, the City maintains 165 water quality filter cartridges, consisting mainly of Contech ZPG™ filters and some Advanced Drainage Systems™ (ADS) Bay filters.

Table SW 4-1 summarizes the estimated quantities of drainage system infrastructure, as described in Section SW 4.3.

Table SW 4-1
City of Monroe Stormwater Facility Summary

Facility	Quantity	Unit
Catch Basins Connected to Stormwater Pipe	3,501	Each
Catch Basins with Infiltration Only (Rock Holes)	10	Each
Oil-water Separators / Control Structures	36 / 38	Each
Stormwater Pipe	78	Miles
Ditches	15	Miles
Biofiltration Swales	8	Each
Filters (Individual Canisters)	165	Each
Underground Vaults	20	Each
Retention Ponds	5	Each
Detention Ponds	22	Each
Infiltration Trench System	2.8	Miles
Culverts	240	Each
Outfalls	19	Each

SW 4.3.11 Receiving Waters

The stormwater conveyance system discharges to the following receiving waters via the outfalls listed in Section SW 4.3.9 (Refer to Figure SW 4-2):

- Woods Creek.
- French Creek.
- Cripple Creek.
- Skykomish River.

The mouth of Woods Creek is located within the eastern portion of the City, discharging to the Skykomish River between Buck Island and South Lewis Street, at the southern boundary of the City. The majority of the Woods Creek watershed lies outside of and to the northeast of the City.

The northwest portion of the City lies within the headwaters of Cripple Creek, discharging to the southwest, into upper French Creek. The majority of French Creek is located outside of and to the north and west of the City. French Creek discharges to the Snohomish River over three miles from the western boundary of the City and downstream of the confluence with the Skykomish River.

Portions of south and east Monroe drain directly to the Skykomish River, both upstream and downstream of the confluence with Woods Creek. The Skykomish River discharges into the Snohomish River further downstream of the City. Ultimately, all stormwater runoff originating within City limits discharges to the Snohomish River, through either the Skykomish River or French Creek basins. These receiving waters are further characterized in Section SW 4.4.

SW 4.4 Watersheds

The City is comprised of three primary watersheds: Woods Creek, French Creek, and the Skykomish River. The Skykomish watershed drains southern and eastern portions of the City, while Woods Creek drains the eastern portion, and French Creek drains the central and western areas of the City.

In March 2023, the City completed a Stormwater Management Action Plan (SMAP) in accordance with requirements of the Western Washington Phase II Municipal Stormwater Permit (Landau, 2023)[2]. The SMAP included a watershed inventory, a receiving water condition assessment, and receiving water prioritization assessment.

Of the three primary watersheds, the Woods Creek watershed covers 64 square miles with approximately 1.1 square miles located within the City; the French Creek watershed covers 28 square miles with approximately 3.5 square miles located within the City; and the Skykomish River watershed covers 836 square miles with approximately 1.4 square miles within the City.

Water quality criteria for temperature, dissolved oxygen, total dissolved gas, pH, turbidity, and bacteria are identified in WAC 173-201A-200. Criteria for nutrients are in WAC 173-201A-230. Criteria for toxic substances are in WAC 173-201A-240.

The SMAP receiving water condition assessment included evaluating 15 drainage basins, five within the French Creek watershed, nine within the Woods Creek watershed, and one within the Skykomish River watershed. Priority pollutants within the 15 drainage basins included fecal coliform bacteria, dissolved oxygen, temperature, nutrients (phosphorus and nitrate), total suspended solids (TSS), and metals. Temperature was listed for all 15 drainage basins. The receiving water prioritization listed French Creek first, with the highest need for improvement, followed by Woods Creek and then the Skykomish River as the lowest priority.

SW 4.4.1 Woods Creek Watershed

The Woods Creek watershed is 64 square miles. Of that, 1.1 square miles (< 2%) are in the City. Woods Creek headwaters are northeast of the City in the foothills of the Cascades. The discharge to the Skykomish River is within the City limits. The area within the City limits includes Buck Island, which is located between Woods Creek and Skykomish River just upstream of the confluence. The majority of the watershed is undeveloped. Within the City limits, the watershed is zoned R4, residential with four dwelling units per acre. The total length of Woods Creek is approximately 17 miles. The City's stormwater drainage

[2] Landau Associates, Inc. (2023, March 30). *Stormwater Management Action Plan (SMAP), City of Monroe, WA*. Landau Associates, Inc.

system discharges to the creek at six locations, as shown in Figure SW 4-2. Because the City comprises a small percentage of the overall watershed, the City has a relatively minor impact on water quantity and quality characteristics.

Watershed Hydrology

Watershed hydrology is influenced by the contributing area, topography, soil types, land use/vegetation, and climate/rainfall.

The soils in the Woods Creek watershed are primarily composed of alluvial and lacustrine deposits with moderately low to moderately high infiltration capacities. There are also areas of glacial till, which have very low to moderately low infiltration capabilities, and glacial outwash, which have high to very high infiltration rates. Within the City limits, soils are comprised primarily of alluvial deposits near the Skykomish River and glacial outwash and glacial till soils further upstream.

There is a small ridge running northeast-southwest separating the Woods Creek and the French Creek watersheds. The Woods Creek watershed drains to the southeast over relatively flat slopes.

Current land use is primarily residential inside the City limits, with some open space, commercial, and industrial areas. Land use outside the City limits is a mixture of agricultural, rural residential, and forest. Historically, the watershed was forested.

Lower Woods Creek Subbasin

Lower Woods Creek begins at the confluence of the West Fork of Woods Creek and Woods Creek and drains into the Skykomish River at Buck Island Park in the City. Lower Woods Creek is the only subbasin of the Woods Creek watershed located in the City.

Watershed Water Quality

The City has two water quality sampling sites in the Woods Creek watershed, named Al Borlin and Eagles Park. Sampling site locations are identified in Figure SW 4-2. Samples are measured for temperature, dissolved oxygen, and fecal coliform concentrations. Monitoring is conducted monthly and submitted for laboratory testing. Results are tabulated and uploaded to Washington State Department of Ecology's (Ecology) Environmental Information Management (EIM) database and reported in the City's annual Stormwater Management Program Plan.

Woods Creek is listed under several Total Maximum Daily Loads (TMDLs) by Ecology. A TMDL is a regulatory term described in the Clean Water Act which has a purpose to restore impaired waters that have identified the maximum amount of a pollutant that a body of water can receive while still meeting water quality standards.

Ecology has created the 303(d) List and 305(b) Report to satisfy the state's requirement under the Clean Water Act to report impaired waters to the Environmental Protection Agency (EPA). TMDLs for the Woods Creek Watershed are presented in Table SW 4-2.

The Phase II permit requires the City to comply with specific requirements for TMDLs, including record keeping for actions required by the City and recording the status of the implementation. Such documentation is included in the City's Annual Report which is submitted to Ecology each year. Each Annual Report includes a summary of relevant program activities conducted within a TMDL area to address applicable TMDL parameter(s).

Table SW 4-2
Water Quality for Woods Creek Watershed

Listing Number	Category	Parameter	Listing Water Body Name
7,436	2	Dissolved Oxygen	Woods Creek
7,437	4A	Bacteria – Fecal Coliform	Woods Creek
7,438	4A	Bacteria – Fecal Coliform	Woods Creek, West Fork
7,440	4A	Bacteria – Fecal Coliform	Woods Creek
7,441	4A	Bacteria – Fecal Coliform	Woods Creek, West Fork
10,603	2	Temperature	Woods Creek
14,692	2	Temperature	Woods Creek
14,726	5	Dissolved Oxygen	Woods Creek, West Fork
14,727	2	Temperature	Woods Creek, West Fork
21,981	4A	Bacteria – Fecal Coliform	Woods Creek, West Fork
40,813	2	pH	Woods Creek
40,818	2	pH	Woods Creek, West Fork
70,261	2	Benthic Macroinvertebrates Bioassessments	Woods Creek
100,732	1	Zinc	Woods Creek, West Fork

Note:
1) Reference: Ecology, 2024[3].

Watershed Fish Habitat

Priority habitats and species (PHS) maps from the Washington Department of Fish and Wildlife (WDFW) indicate the PHS Listed Occurrence in Woods Creek of Fall Chinook, Summer Chinook, Coho, Fall Chum, Pink Salmon, Summer Steelhead, Winter Steelhead, Cutthroat, Dolly Varden/Bull Trout, and Freshwater Forested/Shrub Wetlands (WDFW, 2024)[4]. Endangered Species listings are summarized in Table SW 4-3.

[3] Washington State Department of Ecology (Ecology). (April 2024). *Water Quality Assessment 305(b) Report (current).* Accessed at:https://geo.wa.gov/datasets/waecy::water-quality-assessment-305b-report-current/about

[4] Washington State Department of Fish and Wildlife (WDFW). (April 2024). *Priority Habitats and Species on the Web*. Accessed at: https://geodataservices.wdfw.wa.gov/hp/phs/

Table SW 4-3
Endangered Species Listings

Occurrence Name	Federal Status	State Status
Chinook	Threatened	N/A
Coho	Candidate	N/A
Chum	Not Warranted	N/A
Dolly Varden / Bull Trout	N/A	N/A
Steelhead	Threatened	N/A

Note:
1) Reference: WDFW, 2024.

Watershed Planning Status

Woods Creek is a subbasin located in Water Resource Inventory Area (WRIA) 7. WRIA 7 includes the Snohomish River, the Snoqualmie River, the Skykomish River, and associated tributaries. It also includes streams draining directly to Puget Sound between the City of Mukilteo and the City of Everett, on the Tulalip Plateau, and in the Marysville Trough (Ecology, 2022)[5].

According to the Snohomish River Basin Salmon Conservation Plan (Snohomish County, 2005)[6], restoration of "hydrologic and sediment process for peak and base flow" in Woods Creek is a Tier One priority. In addition, Woods Creek is part of a TMDL in development for water temperatures in the Lower Skykomish River subbasin. Pressures in the basin include development from the nearby urban center of the City and conversion of larger agricultural tracts to a five-acre rural residential development.

Several studies and reports have been prepared for Woods Creek, including:

- Woods Creek Watershed Habitat Conditions Report. Snohomish County Public Works, Surface Water Management. 2013.
- Woods Creek Action Plan. Snohomish Conservation District. 2012.
- Unpublished Woods Creek fish passage barrier inventory and prioritization. Wild Fish Conservancy and Snohomish Conservation District. 2015.

SW 4.4.2 French Creek Watershed

The French Creek watershed is 28 square miles. Of that, 3.5 square miles (< 12%) are in the City. The headwaters of French Creek are located to the north and west of the City. French Creek discharges to the Snohomish River approximately four miles west of the City limits. Some of the drainage courses discharging into French Creek downstream of the City have been straightened into ditches along agricultural land. The total length of French Creek is approximately eight miles. Because the City encompasses a larger percentage of the French Creek watershed than the Woods Creek or Skykomish

[5] Washington State Department of Ecology (Ecology). (March 2022). *Watershed Restoration and Enhancement Plan, WRIA 7-Snohomish Watershed Final Draft Plan for Salmon Recovery Funding Board Review, Publication 22-11-013.*

[6] Snohomish Basin Salmon Recovery Forum. (June 2005). *Snohomish River Basin Salmon Conservation Plan*. Snohomish County Department of Public Works, Surface Water Management Division.

River watersheds, it has a more significant role in the quantity and quality characteristics of water in the stream.

Watershed Hydrology

Watershed hydrology is influenced by the area, topography, soil types, land use/vegetation, and climate/rainfall.

The soils of the portion of the French Creek watershed located within the City limits are comprised mainly of alluvial and lacustrine deposits which have moderately low to moderately high infiltration capabilities, some glacial outwash which have high to very high infiltration rates, and glacial till, which have moderately low to very low infiltration capabilities. A portion of the soils within the watershed contain peat.

There is a small ridge running northeast-southwest separating the Woods Creek and the French Creek watersheds. The area within French Creek watershed drains to the northwest over relatively flat slopes.

The portion of the watershed located within the City is comprised primarily of residential and light industrial areas. Downstream of the City limits the watershed contains primarily agricultural lands. Upstream of the City limits the watershed contains a mixture of forest and rural residential lands. Historically, the watershed was forested.

Cripple Creek Subbasin

Cripple Creek drains the northern portion of the City and is located within the French Creek watershed. It also drains a large area located outside of the City limits to the north.

Cripple Creek flows west along State Route 2 before diverging from the highway and flowing through a series of agricultural drainage ditches, ultimately joining with French Creek prior to discharging to the Snohomish River.

Watershed Water Quality

The City has six water quality sampling sites within the French Creek watershed, named Cripple Creek, French Creek, Lake Tye Outfall, Lake Tye Inlet, Lords Lake Outfall, and Southwest Ditch. Sampling site locations are identified on Figure SW 4-2. The sampling sites measure temperature, dissolved oxygen, fecal coliform concentrations. Monitoring is conducted on a monthly basis and submitted for laboratory testing. Results are tabulated and uploaded to Ecology's Environmental Information Management (EIM) database and reported in the City's annual Stormwater Management Program Plan.

French Creek and Cripple Creek are listed under several TMDLs by Ecology as presented in Table SW 4-4.

Table SW 4-4
Water Quality for French Creek Watershed

Listing Number	Category	Parameter	Listing Water Body Name
7,272	5	Dissolved Oxygen	French Creek
7,274	4A	Bacteria – Fecal Coliform	French Creek
7,275	5	Temperature	French Creek
7,276	5	Dissolved Oxygen	French Creek
7,279	4A	Bacteria	French Creek
7,280	4A	Bacteria	French Creek
7,282	5	pH	French Creek
9,270	2	Ammonia-N	French Creek
9,273	5	Temperature	French Creek
40,735	5	Temperature	French Creek
40,743	5	Dissolved Oxygen	French Creek
40,748	5	pH	French Creek
70,214	2	Benthic Macroinvertebrates Bioassessments	French Creek
80,645	5	pH	French Creek
81,844	2	Dissolved Oxygen	French Creek
82,067	2	Dissolved Oxygen	French Creek
93,464	5	Temperature	French Creek
93,466	5	Temperature	French Creek
100,749	1	Zinc	French Creek
100,750	1	Zinc	French Creek
71,219	2	pH	Cripple Creek
73,912	2	Temperature	Cripple Creek
74,187	4A	Bacteria - Fecal Coliform	Cripple Creek
77,603	2	Dissolved Oxygen	Cripple Creek

Note:
1) Reference: Ecology, 2024.

Watershed Fish Habitat

Washington Department of Fish and Wildlife PHS maps for French Creek, downstream of the City, indicate the PHS Listed Occurrence of Coho, Summer Steelhead, Winter Steelhead, Cutthroat, Dolly Varden/Bull Trout, and Wetlands (WDFW, 2024). The PHS maps indicate the Listed Occurrence for Coho and Dolly Varden/Bull Trout within the City limits. Endangered Species listings for Puget Sound apply to French Creek and are summarized in Table SW 4-3.

Watershed Planning Status

French Creek is located in WRIA 7, the Snohomish River watershed. French Creek is part of the WRIA Subbasin called, Estuary/Snohomish Mainstem, where the Snohomish River, Evans Creek, and French Creek are combined (Ecology, 2022).

The French Creek Watershed Management Plan was completed in 2004 and focused on impacts to the watershed's aquatic resources, including water quality, aquatic habitat, water supply, and flooding and drainage (FC WMC, 2004)[7]. The plan included recommendations including enhancing water resources, controlling stormwater runoff, reducing nonpoint pollution, preventing drainage and flooding problems, and enforcing existing regulations.

SW 4.4.3 Skykomish River Watershed

The Skykomish River watershed covers 836 square miles, of which 1.4 square miles (< 0.2%) are in the City. The river's headwaters are upstream of the City in the Cascade mountains, and the watershed includes Woods Creek. The Skykomish River discharges to the Snohomish River approximately two miles southwest of the City limits.

The majority of stormwater runoff collected and conveyed in the City discharges via dedicated stormwater piping to the outfalls shown in Figure SW 4-2. While the majority of stormwater flows within a dedicated stormwater system, there are a few areas within the old part of town that convey stormwater and sanitary wastewater together in a combined sewer system. Flows from combined systems discharge to the wastewater treatment plant on South Sams Street.

Watershed Water Quality

Skykomish River is listed under several TMDLs by Ecology as presented in Table SW 4-5.

Table SW 4-5
Water Quality for Skykomish River Near Monroe

Listing Number	Category	Parameter	Listing Water Body Name
6,569	5	Temperature	Skykomish River
7,311	1	Bacteria – Fecal Coliform	Skykomish River
7,978	2	Copper	Skykomish River
7,979	2	Silver	Skykomish River
7,980	2	Lead	Skykomish River
9,296	2	Dissolved Oxygen	Skykomish River
10,594	1	Ammonia-N	Skykomish River

Note:
1) Reference: Ecology, 2024.

[7] French Creek Watershed Management Committee. (December 2004). *French Creek Watershed Management Plan*.

Watershed Fish Habitat

The Skykomish River contains Fall and Summer Chinook Salmon, Coho, Fall Chum, Pink, Summer and Winter Steelhead, Dolly Varden/Bull Trout, Cutthroat, and Rainbow Trout (WDFW, 2024). Endangered Species listings for Puget Sound apply as well to the watersheds which ultimately discharge to the Puget Sound. Table SW 4-3 summarizes those listings.

Watershed Planning Status

The Skykomish River is located in WRIA 7. There are three subbasins related to the Skykomish River, the Lower Mid-Skykomish, Skykomish Mainstem, and Upper Skykomish. The City lies within the Skykomish Mainstem subbasin.

Watershed Hydrology

Basin hydrology is influenced by the area, topography, soil types, land use/vegetation, and climate/rainfall. The Skykomish River drainage basin within the City limits is 1.4 square miles. The watershed includes Woods Creek.

The soils of the portion of the Skykomish River basin located within the City limits are comprised mainly of alluvial and lacustrine deposits, with some glacial till. Very little glacial outwash is present.

Stormwater runoff discharges to the Skykomish River from two areas within the City. The southeastern area of the City, east of Woods Creek, discharges directly to the Skykomish River primarily via gently sloping overland flow. A portion of the City south of Main Street and west of Woods Creek discharges to the Skykomish River through seven outfalls, as shown in Figure SW 4-2.

Land use for the Skykomish River watershed located within the City includes residential, commercial, light industrial, open space, and limited open space associated with the Cadman sand and gravel mine adjacent to the River. Outside of the City limits the basin contains primarily forest lands, with some agriculture, residential, and urban areas. Historically, the basin was primarily forested.

THIS PAGE INTENTIONALLY BLANK.

Chapter SW 5 Current Stormwater Management Utility Program

SW 5.1 General Description

The City created its Stormwater Management Utility in 1996. Like other small to medium-sized cities, the City leverages existing staff to manage, operate, and implement its stormwater utility program. The Public Works Department administers the Stormwater Management Utility and executes all elements of the program with support from other City Departments. Staff allocated to stormwater tasks also perform work for other utilities and divisions such as finance, water, sewer, and streets. Staff funded by the Stormwater Management Utility include approximately 10 full-time employee (FTE) positions, summarized in Table SW 5-1. Approximately 4.38 FTE provide operation and maintenance of the stormwater system.

Table SW 5-1
Staff Funded by the Stormwater Management Utility

Staff	Full-time Labor Equivalent (FTE)
Administrative Services / Engineering Services / Capital Construction	4.16
NPDES Programmatic Compliance	0.68
Operations and Maintenance Technicians (Cleaning, Inspection, Repair, and Replacement)	4.38
Facilities / Fleet Support Services	0.69
Total FTE	**9.91**

The Stormwater Management Utility Program consists of numerous elements. These elements are described below and are organized into four categories based on the department or departments that perform the work. Each category is listed below and further described in the following sections.

- Public Works – Design and Construction Division Services.
- Public Works – Operation and Maintenance Division Services.
- Program Support and Administration.
- Capital Improvement Program (CIP).

SW 5.2 Public Works – Design and Construction Division Services

The City's Public Works Design and Construction Division staff contributes to the following Stormwater Management Utility program elements:

- Design and Construction Division Management and Administration.
- New Development and Plan Review (including inspections).
- CIP Planning, Design, and Project Management.

SW 5.2.1 Design and Construction Division Management and Administration

Management and Administration activities include Stormwater Management Utility decision and policy making activities, workload and budgetary coordination, and interaction with other City offices and departments.

SW 5.2.2 New Development and Plan Review (Including Inspections)

The Design and Construction Division staff review all private development plans within the City to ensure they meet the City's standards for permanent stormwater facilities, as well as for temporary erosion and sediment controls during construction. To control runoff from new development or redevelopment, plans submitted for permits are reviewed and construction site field inspections of new or redeveloped property are conducted. In compliance with the Washington State Department of Ecology (Ecology) and National Pollutant Discharge Elimination System (NPDES) Phase II Municipal Stormwater General Permit (NPDES Phase II Permit), the City adopted the Ecology 2019 Stormwater Management Manual for Western Washington (Ecology Stormwater Manual) by reference (Monroe Municipal Code (MMC) 23.40.010).

SW 5.2.3 CIP Planning, Design, and Management

The Design and Construction Division staff oversees the planning, design, and construction management of the City-owned projects in its CIP. Depending on the size of the project, staff may perform the project design work or outsource the design to consultants. The Division is still needed for managing and reviewing the design developed by the consultants. Similarly, construction management efforts may be handled within the Design and Construction Division or outsourced to consultants, depending on the availability of City staff.

SW 5.3 Public Works – Operation and Maintenance Division Services

The Public Works – Operation and Maintenance Division Services staff are responsible for the stormwater system inspections, maintenance, and repairs, as well as other activities that help the City comply with regulatory requirements, primarily the NPDES Phase II Permit.

Activities performed by the Operation and Maintenance Department include:

- Operation and Maintenance Division Management and Administration.
- Inspection and Cleaning.
- Repair and Replacement of Existing Facilities.
- Facility, Equipment, and Vehicle Repair and Maintenance.
- Flood Hazard Planning, Monitoring, and Response.
- Public Education and Outreach.
- Stormwater System Inventory.
- NPDES Phase II Permit Compliance and Pollution Control.
- Coordination with Other Agencies.

Table SW 5-2 shows the primary stormwater maintenance activities performed on City-owned infrastructure by the Public Works Operation and Maintenance Division. The table presents the infrastructure maintained, daily production rates, units cleaned and/or repaired each year, and the estimated staffing needs in FTE. Table SW 5-2 represents the current program, while Chapter SW 7 and Table SW 7-1 present the proposed program needs for the 2024-2029 NPDES Phase II Permit cycle.

THIS PAGE INTENTIONALLY BLANK.

Table SW 5-2
Stormwater Maintenance Activities – Current Program

Maintenance Activity	Units to be Maintained	Production	Estimated Hours / Year	Daily Production	Crew Size	Units Processed Per Year	Years to Process All Units	Full-time Labor Equivalent (FTE)
Catch Basin Cleaning	3,501	Each	400	35	3	1,750	2.0	0.80
Catch Basin Inspection	3,501	Each	140	100	3	1,750	2.0	0.28
Ditch Clearing - Vegetation Control and Sediment Removal	79,200	Linear Feet	80	1,600	3.75	16,000	5.0	0.20
Street Sweeping	60	Miles	127	3.8	1	60	1.0	0.08
Filter Maintenance	165	Each	132	10	3	165	1.0	0.26
Inspect and Clean Control Structures and Oil-Water Separators	38/36	Each	74	8	3	74	1.0	0.15
Storm Retention Pond – Swale Maintenance	2.7	Miles	140	0.15	3	2.6	1.0	0.28
Culvert Jetting and Vactoring	240	Each	77	5	3	48	5.0	0.15
Clean Pipes	78	Miles	250	0.5	3	15.6	5.0	0.50
Clean Retention/Detention Ponds – Annual Vegetation Maintenance and Inspection	27	Each	110	2	4	27	1.0	0.29
Clean Retention/Detention Ponds – Large Scale, Vegetation Maintenance	27	Each	72	1	7	9	3.0	0.34
Clean Retention/Detention Ponds – Sediment Management	27	Each	90	0.8	4	9	3.0	0.24
Clean/Maintain Underground Vaults	20	Each	110	1	7	14	1.5	0.51
Storm Mainline Repairs	750	Linear Feet	40	150	6	750	N/A	0.16
Storm Manhole Repairs	3	Each	24	1	3	3	N/A	0.05
Storm Outfall/Weir Repairs	2	Each	16	1	3	2	N/A	0.03
Catch Basin Repairs	2	Each	16	1	4	2	N/A	0.04
Catch Basin Installs	2	Each	16	1	4	2	N/A	0.04
							Operations and Maintenance Technicians (Cleaning, Inspection, Repair, and Replacement) Labor **Needed** (FTE):	**4.40**
							Operations and Maintenance Technicians (Cleaning, Inspection, Repair, and Replacement) Labor **Available** (FTE):	**4.38**
							Difference (FTE):	**-0.02**

THIS PAGE INTENTIONALLY BLANK.

SW 5.3.1 Operation and Maintenance Division Management and Administration

Operation and Maintenance Division Management and Administration activities include programmatic oversight, field supervision, professional training, meetings and conferences, asset management, and maintenance recordkeeping.

SW 5.3.2 Inspection and Cleaning

Inspection and cleaning activities are fully funded (100 percent) by the Stormwater Management Utility and include street sweeping; vegetation and sediment removal from detention facilities; as well as sediment removal from catch basins, piped conveyance systems, control structures, culverts and ditches. The Stormwater Management Utility also partially funds (50 percent) several roads-related cleaning activities including roadside shoulder and ditch mowing, shoulder maintenance, road shoulder vegetation control by spraying, and street tree maintenance. The Stormwater Management Utility also partially funds (20 percent) of labor for City-owned facility maintenance (such as the decant facility and City shops).

Some cleaning and inspection activities are performed on a routine basis while others are performed on an as-needed basis. Activities performed on a routine basis include street sweeping; roadside mowing and shoulder work; ditch mowing and sediment removal; catch basin inspections and maintenance; stormwater pipe conveyance cleaning; control structure inspection and maintenance; stormwater culvert cleaning; stormwater filter system inspections; and detention pond vegetation clearing. Activities performed more on an as-needed basis include sediment removal from detention ponds and vaults. Additional information about the various cleaning activities is described below.

Street Sweeping

The City owns two vacuum type street sweepers and one porous concrete cleaner/sweeper. A 60-mile route within the City is swept on a regular basis. Streets on this route are swept on the average of 12 times per year, or approximately once every month. Streets that are more susceptible to sediment accumulation are swept more frequently, while those less susceptible are swept less frequently.

Ditch and Roadside Vegetation and Sediment Removal

The Stormwater Management Utility funds 50 percent of the cost for roadside and ditch vegetation cleaning and 100 percent of the sediment removal to maintain proper drainage. The remaining 50 percent of the workload for vegetation control is funded by the General Fund as part of the street maintenance efforts. Approximately 15 miles of roadway shoulders and ditches are maintained.

Detention/Retention Facility Cleaning

There are generally three main activities for detention/retention facility pond cleaning. Perimeter vegetation control including mowing, tree removal, and noxious weed management is performed annually. The annual maintenance includes an inspection to look for other issues with the facility that may require more involved maintenance. The City maintains 22 detention ponds, five retention ponds, and eight bioswales. Sediment management (i.e., removal of accumulated sediment in the pond bottoms), is performed on an as-needed basis.

Sediment removal from vaults and tanks is also completed on an as-need basis. The City maintains 20 vaults; each vault is inspected annually to determine if sediment removal or other maintenance is required.

Catch Basins, Pipes, Culverts, Control Facilities, and Treatment Systems

Cleaning of storm facility structures, pipes, culverts, and treatment systems involves vactoring out wet solids and transporting the material to a City-owned decant facility for proper disposal. Detailed information about these activities is as follows:

- Catch Basins: The City maintains 3,501 catch basins (tracked as catch basins (Type I structures) and manholes (Type II structures)). There are 2,731 Type I catch basins and 770 Type II catch basins. The City is required to inspect all publicly maintained catch basins every two years per the NPDES Phase II Permit. Catch basins with sediment accumulation of more than 50 percent are required to be cleaned within six months of inspection.
- Pipes: The City contains approximately 78 miles of stormwater pipe. This primarily includes jetting/vactoring accumulated sediment.
- Culverts: The City owns 240 culverts and maintains approximately 60 culverts per year.
- Detention/Retention Facility Control Structures and Oil/Water Separators: The City manages 38 control structures, located at 22 detention ponds and five retention ponds, and 36 oil/water separators that require inspection and maintenance. Per the City's NPDES Phase II Permit, these facilities are required to be inspected annually, and maintained on an as-needed basis.
- Water Quality Treatment Facilities: The City maintains 165 water quality filter cartridges, consisting of Contech ZPG™ filters and Advanced Drainage Systems™ (ADS) Bay filters. These facilities are inspected every year and maintenance is performed as needed.

SW 5.3.3 Repair and Replacement and CIP Construction

This activity covers stormwater system repair and replacement and capital improvement construction activities for catch basins, pipes, and culverts that are paid for by the Stormwater Management Utility. This activity is usually a minor focus of the program and is in response to smaller system deficiencies as they are identified. When system repairs and replacement or new construction projects are needed, they are implemented through the Utility's CIP, described in Section SW 5.2.3.

SW 5.3.4 Equipment, Vehicle, and Facility Repairs/Maintenance

Public Works staff provide maintenance and repairs on the City's utility-related equipment, vehicles, and facilities. The Stormwater Management Utility funds its shared portion of the total cost of these repairs and maintenance activities and the other public works utilities and departments (water, sewer, and streets) fund the remaining portions.

SW 5.3.5 Flood Hazard Planning, Monitoring, and Response

Local and regional flood planning, monitoring, and response is performed by Public Works staff but is paid for by the General Fund and through the Monroe Emergency Management Office. Flood-related work occurs within two areas: 1) participation in the National Flood Insurance Program (NFIP), and 2) planning and implementation efforts of the Monroe Emergency Management Office.

To participate in the NFIP, the Federal Emergency Management Agency (FEMA) requires local governments adopt and administer regulatory programs compliant with the minimum standards of the NFIP. The City voluntarily participates in the NFIP's Community Rating System (CRS). By participating in the CRS, the City earns discounts on flood insurance for property owners in the special flood hazard areas (SFHA).

SW 5.3.6 Public Education and Outreach

Public education and outreach, including community involvement and participation, is an important element of the Stormwater Management Utility program and a requirement of the NPDES Phase II Permit. The City's Public Education and Outreach program is aimed at residents, businesses, industries, elected officials, policy makers, planning staff, and other employees of the City. The goal of the program is to reduce or eliminate behaviors and practices that cause or contribute to adverse water quality impacts.

Education and outreach efforts are prioritized to target the following audiences and subject areas:

- General public.
- Businesses, including home-based and mobile businesses.
- Homeowners, landscapers, and property managers.
- Engineers, contractors, developers, and City review staff and land use planners.

The City maintains a surface water management webpage to provide resources and help increase public awareness of the stormwater program and stormwater related issues. The City also has a focus element on illicit discharge detection and elimination (IDDE) and spill reporting public education efforts.

Public awareness for the stormwater program is also provided to the Monroe School District. The City provides funding for surface water related education for elementary, middle school, and high school students. Classes are taught by the Snohomish Conservation District. Funding is provided through the Stormwater Utility Fund and through an Ecology Water Quality Capacity grant which is aimed at helping municipal permittees implement NPDES Phase II Permit requirements.

The City continues to measure the understanding and adoption of the targeted behaviors among the targeted audience. The resulting measurements will be used to direct education and outreach resources most effectively, as well as to evaluate changes in adoption of the targeted behaviors.

In 2021, the City launched a behavior change program called "Shut the Lid". The program is implemented through the City's Source Control Business Inspection Program and targets teaching businesses to keep their dumpster lids closed, for both garbage and recycled materials. Closing the dumpster lid helps to minimize the chance for stormwater to pollute stormwater runoff. There is also a general housekeeping element that is included in the campaign. In addition to businesses, the City has also provided outreach to commercial property owners, like strip malls. This campaign is part of a regional effort known as Dumpster Outreach Group (DOG).

Until 2021, the City's behavior change campaign was natural yard care and the City participated as a part of a larger regional campaign that promoted natural yard care practices as a means to protect water quality and quantity.

The City also promotes other educational campaigns in the City like "Scoop the Poop" through providing outreach at community events or on social media to teach about the impact of pet waste on surface water quality. The City helps to fund pet waste stations at all City parks and regularly give away poop bag holders and bags at City events.

The City also promotes other stewardship opportunities. Whether hosted by the City, the Conservation District, or local non-profit agencies through a variety of communication tools (e.g., community outreach events, social media, and websites).

The Annual Report prepared in accordance with the NPDES Phase II Permit provides additional information regarding public education and outreach.

SW 5.3.7 Storm System Inventory

In 2003, the City began an effort to collect, store, develop, and maintain a geographic information system (GIS) for City infrastructure, including the storm system GIS maps include storm drainage system features including pipes, catch basins, detention/retention facilities, control structures, water quality treatment facilities, ditches, biofiltration swales, outfalls, and natural features like streams, creeks, rivers, and lakes. The City staff estimate that the stormwater GIS information is 95 percent complete.

The City continues to make improvements to the mapping database through utilizing an electronic application so that new or revised information obtained in the field can be fed directly into maintenance and mapping applications, and continuing to add information that is needed for compliance with the NPDES Phase II Permit. Examples of the information required for the NPDES Phase II Permit includes mapping all known municipal separate storm sewer system outfalls, regardless of size, documenting all private systems that connect with the City's MS4, and documenting receiving waters and structural stormwater best management practices (BMP) owned, operated, or maintained by the City.

The City continues to update the GIS system as improved field data becomes available and new systems come online. This is a continual process.

SW 5.3.8 NPDES Phase II Permit Compliance and Pollution Control

The City actively maintains an NPDES Phase II Permit. NPDES is a program created by the federal government as a part of the Clean Water Act (CWA) in 1972 (33 U.S.C. §1251 et seq.). The intention of the CWA is to prevent, reduce, and eliminate pollution in waters of the United States and to restore and maintain the chemical, physical, and biological integrity of the same. The CWA accomplishes this goal through establishing a basic structure for regulating pollutant discharges into the waters of the United States.

In Washington State, the NPDES program is implemented by Ecology and operates in conjunction with the State's Water Pollution Control Law (Chapter 90.48 RCW).

As a municipality with a population below 100,000 residents, the City is considered a Phase II community. As such, Monroe operates in compliance with Ecology's NPDES Phase II Permit as a small/medium municipal separate storm sewer system (MS4).

The City performs a wide range of activities aimed at protecting its MS4 and local waterways. In addition to system management, the City conducts the following pollution control activities specifically to address stormwater pollution:

- Spill response.
- Illicit discharge detection and elimination (IDDE).

- Street sweeping.
- Regulation of development and redevelopment.
- Stream monitoring for total daily maximum loads (TMDL).
- Education and outreach.
- Source control business inspections.

Spill Response

The City established a 24-hour spill reporting hotline in 2009; spills can also be reported online through "Monroe Listens". When a spill occurs in the City, Public Works Environmental Services staff act as the point of contact for spill response. Staff review the incident to determine if the spill may impact the City's municipal separate stormwater system or waters of the state. Staff respond to the spill with the appropriate spill response materials and equipment. When spills occur on private property, staff will provide technical assistance and oversight to ensure the spill is correctly addressed. Environmental Services staff are responsible for reporting spills to Ecology's Environmental Reporting and Tracking System (ERTS) within 24 hours of the event; staff will also ensure that spills occurring on private property are appropriately reported. City staff coordinate spill follow up and close out of an ERTS report with Ecology.

Illicit Discharge Detection and Elimination

The City implemented an IDDE program in 2011 to detect and address non-stormwater discharges, spills, illicit connections, and illegal dumping into the municipal separate storm sewer system. Key elements of the program are described below (refer to the City's current Stormwater Management Program (SWMP) for more detailed information).

- Code requirements, including the establishment of MMC Chapter 13.34 Illicit Discharge Detection and Elimination in 2009, to prohibit non stormwater, illegal discharges, and/or dumping into the City's municipal separate storm sewer system. MMC Chapter 13.34 describes examples of both prohibited discharges and allowable non stormwater discharges when certain conditions are met.
- Reporting platforms to be utilized by the public to notify the City of illicit discharges or connections, include the City's "Monroe Listens" online form as well as a 24/7 Spill Reporting Phone Number available on the City's website. During normal business hours, the 24/7 phone number is directed to City Hall. After-hours calls are dispatched to on-call Operations staff members. Reporting platforms are advertised through outreach as described in the SWMP.
- Standard operating procedures (SOP) for locating the source of a suspected illicit discharge; include upstream tracing visually or with equipment; collecting and analyzing water samples; and conducting inspections of neighboring properties for sources of pollution. SOPs also include actions such as removing the source of the discharge; notifying appropriate authorities; notifying the property owner; providing technical assistance for eliminating the discharge; performing follow-up inspections; and escalating enforcement and legal actions if the discharge is not eliminated. These SOPs are consistent with MMC Chapter 1.06 Enforcement.
- Procedures for field assessment activities include visual dry weather inspection of priority stormwater structures and outfalls during routine infrastructure inspections.
- Annual and onboarding training for staff regarding the IDDE program and compliance requirements.

On average, there are approximately 25 reported illicit discharges per year. Illicit discharges are required to be reported to Ecology each year as a part of the City's annual stormwater report.

Street Sweeping Program

Operations staff conduct regular sweeping operations city-wide to provide water quality and flood reduction benefits. Currently, the City's street sweeping route consists of 60 miles of roadway that is maintained with routes being swept on average once a month. Street sweeping operations are doubled in frequency in the industrial area east of Lake Tye to reduce pollution impacts in the French Creek drainage basin. This effort began in 2022 as a part of the City's Stormwater Monitoring and Action Plan (SMAP). Increased sweeping efforts are tracked by labor collections codes and reported to Ecology.

Regulation of Development and Redevelopment

The City's Environmental Services program within the Operations and Maintenance Department are responsible for ensuring that regulation requirements described in the City's NPDES Phase II Permit are implemented. This includes the adoption and implementation of requirements described in MMC Chapter 23.40 Storm related to development and redevelopment. Staff work with multiple City departments to ensure design standards, erosion and sediment control measures, and pollution prevention actions are maintained during all phases of construction. Enforcement of construction standards is provided by the City's Design and Construction Division.

Post construction stormwater facility maintenance responsibilities are tracked and managed by Operations staff in coordination with the Design and Construction Division.

Stream Monitoring for Total Daily Maximum Loads

Total daily maximum loads (TMDL) are action plans to restore clean water by defining how much of a pollutant a water body can tolerate and still meet state water quality standards. The City has eight TMDL locations that are required to be sampled monthly by the Environmental Services program staff. Samples are collected and analyses are conducted to measure fecal coliform, dissolved oxygen, and temperature. Staff perform field tests for dissolved oxygen and temperature and the analysis for fecal coliform is performed at the City of Everett's Environmental Laboratory. Reporting of water quality sampling results is a condition of the City's NPDES Phase II Permit.

In addition to conducting water quality sampling, the City is also required by the NPDES Phase II Permit to conduct business inspections of commercial handling areas and composting facilities. Certain public education and outreach efforts and IDDE practices are also required to comply with TMDL programmatic requirements.

In addition to staff monitoring and program implementation, the City has chosen to participate in Ecology's Stormwater Action Monitoring (SAM) program and effectiveness study. This involves paying into a general fund with other cities to fund a regional approach to water quality monitoring.

Education and Outreach

The City's Environmental Services program manages education and outreach efforts addressing non-point source pollution through awareness, engagement, and technical assistance with the goal to alter behaviors that cause or contribute to stormwater pollution. Educational efforts include pollution preventing activities like practicing natural yard care, picking up pet waste, fixing vehicle leaks, using commercial car washes, shutting the lids of dumpsters, and reporting spills.

The City conducts education and outreach efforts through a combination of staff, volunteers, consultants, conservation districts, and regional partnerships. Platforms for education and outreach include:

- Environmental messaging related to water quality best management practices on utility bill inserts, social media posts, postcard mailers, and signage posted in community spaces.
- Funding of youth education classes taught by the Snohomish Conservation District in the Monroe School District (Kindergarten through 12th grade).
- Posting information on Channel 21 (public access channel) to notify citizens to contact the City spill reporting hotline to report clogged storm drains, accidental spills, or anyone illegally discharging waste into the City's stormwater system.
- Supporting pet waste stations city-wide through the funding of pet waste bags and installation of new pet waste stations, as needed.
- Sponsoring events such as Youth Environmental Art Contests, Washington State Envirothon, Rain Barrell Workshops, and Lake Tye Science Day.
- Tabeling at community events including Monroe's Easter Egg Hunt and National Night Out Against Crime, as well as at farmers markets and other local events.

Source Control Business Inspections

In 2023, Environmental Services program staff began conducting inspections at privately owned facilities that have potential to generate pollution and have a negative impact on the City's MS4 and local waterways. Inspections provide technical assistance to property and business owners regarding best management practices that must be used to protect stormwater.

The Source Control Business Inspection program is a requirement in the City's NPDES Phase II Permit. The permit requires that businesses within city limits with North American Industry Classification System (NAICS) codes described in Appendix 8 of the NPDES Phase II Permit are inspected every three years. The City maintains a database that tracks all components of the program and provides inspection reports to Ecology in its annual stormwater report.

Monroe Municipal Code (MMC) Chapter 13.34 Illicit Discharge Detection and Elimination was updated in 2022 to describe the requirements, standards, and enforcement capabilities of the City's Source Control Business Inspection program.

Staff Training

The City provided appropriate training for field staff on the identification and reporting of illicit discharges and spills into the City's MS4. The City documents and maintains records of the training provided and the staff trained. Training provided to staff are reported to Ecology as a part of the Stormwater Annual Report.

Other Regulatory Compliance

The City completes its Stormwater Annual Report and Stormwater Management Program (SWMP) each year by March 31st. The Stormwater Annual Report is intended to provide a report to Ecology describing compliance with the NPDES Phase II Permit for the prior year. The SWMP is intended to describe activities the City plans to implement in the year ahead to comply with its NPDES Phase II Permit. Both documents are accessible on the City's Surface Water Management webpage.

The City also oversees the annual inspections of private facilities constructed after August of 2009. Proof of inspection and a copy of needed maintenance is required to be reported to the Environmental Services program staff by property owners or the homeowners' associations.

The City also engages in other activities to help comply with the NPDES Phase II requirements as well as other regulations. More information on regulatory requirements is provided in Chapter SW 6.

SW 5.3.9 Coordination With Other Agencies

Public Works staff regularly coordinate with other agencies such as Ecology, Snohomish County, the Snohomish Conservation District, and other neighboring municipalities and local non-profits. Coordination with agencies can be necessary to comply with environmental regulations and programs or coordinate community education and outreach opportunities. Coordination can also be necessary for operations and maintenance work.

Additional informal coordination with other agencies such as the Monroe Correctional Complex and the Washington State Department of Transportation occur on an as-needed basis.

SW 5.3.10 French Creek Assessment

The Stormwater Management Utility contributes funds to the French Slough Flood Control District of Snohomish County for the operation and maintenance of drainage facilities within the French Creek watershed. The City meets with the District about four times per year. The City provides input to the District's annual maintenance needs and budget. The City's contribution is generally about 38 percent of the district's total budget.

SW 5.4 Program Support and Financial Services

The Stormwater Management Utility pays for a portion of the City's operation costs in return for support services from groups and departments within the City such as Information Technology, Human Resources, Administration, Financial Services, Customer Service, and Custodial Services. The Stormwater Program also contributes to funds to maintain City Hall where most of the City departments and groups reside.

SW 5.5 Capital Improvement Program

The Stormwater Management Utility includes a CIP to make improvements to the system and/or solve stormwater utility problems. In addition, this program component is sometimes shared with other utility or road projects to fund the stormwater portion of a project. Examples of past projects constructed or supported by the Stormwater Utility include:

- Blueberry Lane Conveyance and Infiltration System Improvements.
- North Madison Combined Sewer and Stormwater System Improvements.
- Powell Street Reconstruction.

The CIP is further discussed in Chapter SW 8.

Chapter SW 6 Regulatory Requirements

SW 6.1 Introduction

The City's Stormwater Management Utility is responsible for ensuring compliance, to the extent feasible, with all local, state, and federal regulations and agreements related to stormwater and surface water management. These regulations and requirements include:

- Federal Clean Water Act (CWA) – NPDES Municipal Stormwater Permits and Section 303(d), Section 401, Section 402, Section 404.
- Federal Endangered Species Act (ESA).
- Federal Emergency Management Act (FEMA) Flood Management.
- Washington State Regulations including:
  - Washington State Water Pollution Control Act,
  - Water Quality Standards for Ground Waters,
  - Water Quality Standards for Surface Waters,
  - Sediment Management Standards,
  - Growth Management Act,
  - Shoreline Management Act, and
  - Critical Areas requirements.
- City Comprehensive Plan.
- Monroe Municipal Code (MMC).

Many of the regulations established were created to address deficiencies in the management of stormwater and surface water. These deficiencies have been identified as creating safety and public health problems, as well as threatening the existence of native species. City staff coordinate with agencies at the federal, state, and local level on projects or activities requiring multi-agency cooperation to achieve and maintain compliance.

The City is currently compliant with federal, state, and local compliance programs and requirements. Additional regulations and requirements related to storm and surface water may arise during the timeframe of this Plan. As these changes happen, the City may need to adjust staffing and budget to accommodate for these changes. The City may recommend reprogramming existing activities within existing funding levels to accommodate unforeseen changes increased regulatory requirements, or it may seek to increase utility rates to expand its program.

This section summarizes the current regulations, as well as the agency coordination required to comply with the City's Stormwater Management Program.

SW 6.2 City Ordinances and Regulations

This section provides an overview of the City's current ordinances and regulations relevant to storm and surface water management. The City's regulations are set forth in the MMC.

SW 6.2.1 Monroe Municipal Code 1.04 – Enforcement

The City MMC establishes a method to enforce civil violations of the MMC. The MCC has three escalating methods of enforcement. With respect to stormwater, the MMC provides for enforcement of violations of any City ordinance.

SW 6.2.2 Monroe Municipal Code 6.04 – Nuisances

The City MMC covers a wide range of prohibited public nuisances including the pollution of public waters. Specifically, the MMC prohibits "The pollution of any public well or cistern, stream, lake, canal or body of water by sewage, creamery or industrial wastes or other substances."

The Chapter includes enforcement, including penalties and remedies, by referencing Chapter 1.04 of the MMC.

SW 6.2.3 Monroe Municipal Code 13.32 – Stormwater Management Utility

The creation and purpose of the Stormwater Management Utility is to provide the City the opportunity to manage and improve its stormwater and surface water and to protect public health and waters of the state. The Stormwater Management Utility allows for the collection of service charges and fees from City residents to implement stormwater related activities such as capital improvements and retrofits, a stormwater operation and maintenance program, and meeting various regulatory requirements stipulated by the Washington State Department of Ecology's (Ecology) National Pollutant Discharge Elimination System (NPDES) Municipal Stormwater Phase II General Permit (NPDES Phase II Permit).

Other items specified in the MMC include the City's authority to establish and adjust rates and charges, limitation of liability, classification of property, and service charge exemptions.

SW 6.2.4 Monroe Municipal Code 13.34 – Illicit Discharge, Detection and Elimination

The purpose of this chapter is to provide for the health, safety, and general welfare of the City through the regulation of non-stormwater discharges to the stormwater system, to the maximum extent practicable as required by federal and state law. It also establishes methods for controlling the introduction of pollutants to the stormwater system, including the prohibition of illicit connections. The MMC describes the legal authority to carry out inspections, surveillance and monitoring necessary to ensure compliance with this chapter.

The chapter includes enforcement, including penalties and remedies, by referencing Chapter 1.04 of the MMC.

SW 6.2.5 Monroe Municipal Code 14.01 – Flood Hazard Area Regulations

The purpose of the MMC is to provide general standards for new development or substantial improvement in the floodplain, including:

- Anchoring to prevent flotation.
- Specifying materials that are more resistant to flood damage.
- Requiring utilities to be designed to minimize infiltration from floodwater and avoid damage from floods.

- Requiring new residential construction or substantial improvement to elevate the lowest floor, including the basement one foot or more above the base flood elevation.
- Requirement that prevents encroachments into the floodway portion of the floodplain unless it can be demonstrated that the proposed encroachment will not result in any increase in flood levels.

The flood hazard areas of the City are subject to periodic inundation that results in property damage, health and safety hazards, disruption of commerce and governmental services, extraordinary public expenditures for flood protection and relief, and impairment of the tax base. These flood losses are caused by the cumulative effect of obstructions in areas of special flood hazards and uses that are inadequately flood proofed, elevated, or otherwise protected from flood damage also contribute to the flood loss.

Regulations and minimum standards described in this Chapter are reinforced by the City's participation in the Community Rating System (CRS) administered through FEMA's National Floodplain Insurance Program (NFIP). The City is currently assigned a Class 5 rating.

SW 6.2.6 Monroe Municipal Code 15.02 – Stormwater Maintenance

The purpose of the MMC is to describe standards for inspection and maintenance programs of both private and public facilities intended to maintain an effective and functional stormwater system. The MCC also establishes minimum levels of compliance that must be met as described in the NPDES Phase II Permit and defers to the adopted Stormwater Management Manual for applicable best management practices to be implemented and maintained.

The chapter assigns inspection authority and includes enforcement, including penalties and remedies, by referencing Chapter 1.04 of the MMC.

SW 6.2.7 Monroe Municipal Code 22.80 – Critical Areas

The purpose of this chapter is to preserve and protect critical areas as defined by the Washington State Growth Management Act (GMA) by regulating development within and adjacent to critical areas, this is accomplished by:

- Mitigate unavoidable impacts to critical areas by regulating alterations in and adjacent to critical areas.
- Prevent adverse cumulative impacts to wetlands, streams, shoreline environments, and fish and wildlife habitat.
- Protect the public and public resources and facilities from injury, loss of life, property damage or financial loss due to flooding, erosion, landslides, soils subsidence or steep slope failure.
- Implement the goals, policies, guidelines and requirements of the City Comprehensive Plan and the Washington State GMA.
- Establish review procedures for development proposals in and adjacent to wetlands.
- Protect public health, safety and welfare by preventing adverse impacts of development.

The chapter includes enforcement by referencing Chapter 22.10 of the MMC.

SW 6.2.8 Monroe Municipal Code 22.82 – Shoreline Management

The MMC adopts the Shoreline Master Program which protects all shorelines within the City; approximately three miles of shoreline are regulated by the City per the Shoreline Management Act. The Skykomish River, located along the City's southeastern border, is identified as a Shoreline of the Statewide Significance. Permitted uses and permitted modifications for shorelines are described in the MMC. The Shoreline Master Program also outlines regulations related to the shorelines of Woods Creek and Lake Tye.

SW 6.3 State Regulations

SW 6.3.1 Revised Code of Washington (RCW) 43.21C – State Environmental Policy Act (SEPA)

Modeled after the National Environmental Policy Act (NEPA), State Environmental Policy Act (SEPA) requires the identification and evaluation of probable impacts of activities for all elements of the environment. The SEPA rules (Chapter 197.11 WAC) became effective in April 1984.

SEPA review occurs in tandem with other agency processes. It is required for all nonexempt construction, demolition, landfills, comprehensive plans, zoning, and development regulations that are licensed, funded, or approved by a government agency. Any nonexempt governmental action—at any level—may be conditioned or denied pursuant to SEPA (RCW 43.21C.060).

SW 6.3.2 RCW 77.55 – Hydraulic Code

The Washington Department of Fish and Wildlife (WDFW) requires Hydraulic Project Approval (HPA) for construction activities that use, divert, obstruct, or change the natural flow or bed of any waters of the state. The purpose of the requirements, which are administered through the HPA permit process, is to protect fish habitat in stream channels, to prevent erosion, and to protect freshwater and near shore marine aquatic life. Any construction activity such as bridge painting, channel improvements, stream restoration, or culvert replacements within the ordinary high-water mark of any stream would fall under the HPA permit requirements.

Per Senate House Bill (SHB) 2251, all fish barrier removal projects sponsored by local governments, may use a streamlined HPA permit review process (RCW 77.55.181.). The bill also establishes a fish barrier removal board to coordinate efforts to identify and prioritize fish barrier removals.

SW 6.3.3 RCW 86.16 – Washington Floodplain Management

Chapter 86.16 RCW Floodplain Management establishes statewide authority to Ecology for the floodplain management regulation elements of the National Floodplain Insurance Program (NFIP). Under Washington Administrative Code (WAC) 173-158, local governments must adopt and administer regulatory programs complaint with the minimum standards of the NFIP. Ecology provides technical assistance to local governments for both identifying the location of the 100-year base floodplain and in administering their floodplain management ordinance.

The NFIP Community Rating System (CRS) is a voluntary incentive program that recognizes and encourages community floodplain management activities that exceed the minimum NFIP requirements. The City currently participates in this program and is rated as a Class 5 community, enabling community members located in floodplain areas to receive a twenty-five percent discount on their flood insurance premiums.

Engaging in the following types of activities gives the City CRS credits:

- Maintaining elevation certificates on all new and substantially improved buildings in the Special Flood Hazard Area.
- Providing information on Flood Insurance Rate Maps (FIRM) and the flood insurance purchase requirement to inquirers and publishing a document that informs lenders, insurance agents, and real estate agents.
- Enforcing the floodplain management provisions of municipal zoning, subdivision, and building code ordinances.
- Using and updating the City's digital mapping system.
- Enforcing the stormwater management provisions of municipal zoning, subdivision, and building code ordinances for new developments in the watershed.
- Implementing the City's drainage system maintenance program.
- Performing inspections and subsequent maintenance if warranted.

SW 6.3.4 Growth Management Act (GMA)

Enacted on July 1, 1990, the GMA is intended to manage growth in Washington's fastest-growing counties through the adoption of local comprehensive land use plans and development regulations. A 1995 GMA amendment requires all counties and cities in Washington to include the best available science in developing policies and development regulations to protect the functions and values of critical areas.

The standard for all plans consists of 13 advisory goals aimed solely at guiding the development of local comprehensive plans. These advisory goals include encouraging urban growth where reasonable, reducing urban sprawl, encouraging efficient transportation systems based on regional priorities, encouraging the availability and variety of affordable housing, encouraging the retention of open space and recreational opportunities, and protecting the environment.

The City's Comprehensive Plan was developed to meet the requirements of the GMA.

SW 6.3.5 Shoreline Management Act

Washington's Shoreline Management Act was adopted in a 1972 referendum "to prevent the inherent harm in an uncoordinated and piecemeal development of the state's shorelines."

Ecology provides technical assistance, and reviews and approves local master programs and permit decisions, but the State Shoreline Management Act is administered through a cooperative program between local governments and Ecology. The City has developed its Shoreline Master Program to regulate development along the Skykomish River, Woods Creek, and Lake Tye. The Shoreline Management Act includes emphasis on public participation in developing local shoreline programs and in the local permit process.

SW 6.3.6 RCW 90.48 – State Implementation of the CWA

The federal CWA was passed in 1972 "to restore the chemical, physical, and biological integrity of the Nation's water" (33 USC 1251 [a]). There are four sections of this legislation that affect the City's stormwater management program:

- Section 303(d).
- Section 401.
- Section 402.
- Section 404.

Washington State has been granted NPDES permitting authority by the United States Environmental Protection Agency (EPA) and administers the CWA through regulations promulgated by Ecology for Sections 303(d), 401 and 402 (RCW 90.48.260). These three sections, which the state administers using the same designations as federal, are described in further detail below. Section 404 is described under the Federal Regulations.

Section 303(d) – Category 5: Polluted Waters

Section 303(d) (33 USC 1313 [d]) requires states to periodically compose a list of water quality-limited water bodies. Waters on this list require a Total Maximum Daily Load (TMDL) study, i.e. a study that determines the allowable pollutant loading for the receiving waters for the water quality parameter causing the water quality impairment. It is the responsibility of the State of Washington to perform the TMDL studies.

Section 401 – Water Quality Assessment Certification

Section 401 of the CWA requires that applicants receiving a Section 404 permit from the U.S. Army Corp of Engineers first receive certification from the State that the proposed project will meet state water quality standards and other aquatic protection regulations. In Washington, applicants are required to obtain the Section 401 water quality certification from Ecology. The 401 Certification can cover both the construction and operation of the proposed project. Any conditions of Ecology's certification become conditions of the federal Section 404 permit. The federal agency cannot issue its permit until the certification is approved, conditioned, or waived by the State. If the State denies a certification, the federal agency cannot issue a permit for the project.

Section 402 – National Pollutant Discharge Elimination System

Section 402 of the CWA states prohibits the discharge of pollutants through a point source into "waters of the United States" unless they have an NPDES permit. The NPDES permit program helps address water pollution by regulating point sources that discharge pollutants to waters of the United States. The permit provides two levels of control: technology-based limits and water quality-based limits.

Under the CWA, the EPA authorizes the NPDES permit program to state, tribal, and territorial governments, enabling them to perform many of the permitting, administrative, and enforcement aspects of the NPDES program. In Washington state, the NPDES Permit program is administered by Ecology.

The City operates under the NPDES Phase II Permit. Municipal separate storm sewer system (MS4) permits "require controls to reduce the discharge of pollutants to the maximum extent practicable" through specific permit requirements. These requirements include:

- Implementation of Best Management Practices (BMP).
- Development and implementation of strategic plans for reducing the pollutant loadings generated by various land uses and activities.
- Ensuring that there are not any non-stormwater discharges connected to their system.
- Developing a program to reduce pollution generated by new development and existing development.

Furthermore, the NPDES Phase II Permit requires the City to implement activities for permit compliance that fall into six categories:

- Public Education, Outreach, and Participation.
- Illicit Discharge, Detection, and Elimination (IDDE).
- Controlling Runoff from New development, Redevelopment, and Construction Sites.
- Pollution Prevention and Operation and Maintenance (O&M) for Municipal Operations.
- Stormwater Monitoring.
- Reporting and Recordkeeping.

SW 6.4 Federal Regulations

SW 6.4.1 National Environmental Policy Act (NEPA)

The NEPA was passed in 1970. Its goals are to protect, restore, and enhance the environment. The NEPA documentation requirements apply to all activities with a federal nexus (i.e. generally either federally funded or needing federal permits). The NEPA requirements are to adequately describe the environmental ramifications of proposed actions, to fully disclose to the public proposed federal actions and provide a mechanism for public input to federal decision-making, to prepare environmental impact statements, and to consider alternatives and mitigation for every major action (usually construction projects) that would significantly affect the quality of the human environment. The provisions for ensuring that agencies follow the NEPA in the Council for Environmental Quality provisions for implementation (43 CFR 1500-1508).

SW 6.4.2 Clean Water Act (CWA)

CWA was passed in 1972 "to restore the chemical, physical, and biological integrity of the Nation's water" (33 USC 1251 [a]). There are four sections of this legislation that affect the City's surface water program:

- Section 303(d);
- Section 401;
- Section 402-NPDES; and
- Section 404.

As previously stated, the CWA is a federal regulation but it establishes statewide authority through regulations promulgated by Ecology for Sections 303(d), 401, and 402 (RCW 90.48.260).

Section 404 Wetlands

Section 404 deals with activities involved with filling waters of the United States. The water in question is often a wetland. A wetland is defined as: "those areas that are inundated or saturated by surface or ground water at a frequency and duration sufficient to support, and that under normal circumstances do support, a prevalence of vegetation typically adapted for life in saturated soil" (33 CFR 328.3 [b]). The U.S. Army Corps of Engineers (Corps) has regulatory authority to administer a permit program that results in no net loss of these waters of the United States.

When evaluating activities that are regulated by Section 404, the emphasis is to look at alternatives that avoid, then minimize, then compensate for any wetland impacts. Unavoidable impacts are compensated for by a system of replacement ratios that vary depending on the quality of wetlands being impacted.

SW 6.4.3 Endangered Species Act (ESA)

Puget Sound and its tributary streams in the vicinity of the City provide habitat, or may provide habitat, for aquatic species listed as threatened or endangered under the ESA of 1973. The ESA prohibits killing or harming an endangered species in any way, including significant modification of critical habitat for that species. The National Oceanic and Atmospheric Administration (NOAA) Department of Fisheries is responsible for marine species. The United States Fish and Wildlife Service (USFWS) is responsible for resident aquatic species.

In June 2000, NOAA Department of Fisheries adopted a rule prohibiting the “take” (which includes harassing, harming, pursuing, hunting, shooting, wounding, killing, trapping, or collecting; or attempting any of these things) of 14 groups of salmon and steelhead listed as threatened under the ESA.

The City is a member of the Regional Road Maintenance Program with the Washington State Department of Transportation (DOT) that resulted in federal agencies approving the City’s application to be qualified for an ESA “take” limit when complying with the Regional Road Maintenance Program. The City received a letter from NOAA Fisheries in 2004 indicating it approved of the Regional Road Maintenance Program the City adopted.

SW 6.4.4 National Flood Insurance Program

Floodplain management regulation elements of the National Flood Insurance Program are administered by FEMA and are implemented in Washington State by Ecology as discussed previously.

Chapter SW 7 Future Program Needs

SW 7.1 Introduction

In addition to performing the current operational programs described in Chapter SW 5, the City must implement additional activities that are expected to be needed over the planning period and into the future. This chapter includes an assessment of the requirements and resources that are needed above the current program and estimates additional staffing needs in terms of full-time equivalent (FTE) positions.

The 2024-2029 National Pollutant Discharge Elimination System (NPDES) Phase II Municipal Stormwater General Permit (NPDES Phase II Permit) came into effect on August 1, 2024. The new permit includes additional requirements that affect the City's stormwater policy decisions, operation and maintenance program, reporting requirements, and other aspects of the Stormwater Utility.

The City also continues to expand within the Urban Growth Area (UGA). Currently, the City covers 6.41 square miles (4,104 acres), while the UGA boundary encompasses 7.65 square miles (4,894 acres). If the City expands to all of the area within the UGA, there is a potential to add an area of 1.24 square miles (790 acres). This will not occur at once but will occur over a series of annexations. Growth through annexation means that the City will assume more responsibilities to own, operate, and maintain new and aging stormwater infrastructure. Additional staffing resources need to be considered for operation, maintenance, replacement, monitoring, and reporting to meet permit requirements.

Evolving requirements include changes to current regulations, new regulations, and developing standards of practice. The City will need to have the staffing available so that they can be flexible to adjust to changes as they arise.

For the reasons described above, this Chapter is divided into the following sections:

- Stormwater Planning and Policies.
- Future Program Needs to Meet NPDES Phase II Permit Requirements.
- Future Program Needs, Considering Annexations.
- Evolving Requirements.
- Recommended Actions.

SW 7.2 Stormwater Planning and Policies

There are several stormwater policies the City must consider and integrate into their long-range stormwater planning efforts. The policy discussions described in this section include requirements from the 2024-2029 NPDES Phase II Permit, including:

- Stormwater planning, related to long-range plans, Low Impact Development (LID), and tree canopy goals and policies.
- Stormwater Management Action Planning (SMAP).
- Stormwater Management for Existing Development (SMED).

In the future, the City should be prepared for new and updated policy considerations as future NPDES Phase II permits are drafted and issued by Ecology.

SW 7.2.1 Stormwater Planning

The City is required to implement a stormwater planning program to inform and assist in the development of policies and strategies as water quality management tools to protect local receiving waters such as those in the Skykomish River, Woods Creek, and French Creek drainage basins. The City will accomplish this through long-range planning, evaluating and updating stormwater policies, and implementing current permit requirements.

Coordination with Long-Range Plan Updates

The City is required to evaluate how stormwater management needs, protections, and/or improvements of receiving water health inform the City's long-range or comprehensive planning processes, and implementation strategies. This is currently underway through the development of this Stormwater Comprehensive Plan Update and the overall Comprehensive Plan for the City.

Low Impact Development (LID)

Low Impact Development (LID) principles and best management practices (BMPs) shall continue to be included through updating, revising, and preparing new local development-related codes, rules, standards, or other enforceable documents. LID shall continue to be an appropriate preferred approach with the intent to minimize impervious surfaces, native vegetation loss, and stormwater runoff in all types of development situations, where feasible.

Tree Canopy Goals and Policies

The City will consider how existing or future tree canopy can support stormwater management and water quality improvement in receiving waters. Specific considerations for tree canopy evaluations will include maintaining or increasing canopy in overburdened communities and maintaining existing mature canopy on City-owned or operated lands.

The NPDES Phase II Permit includes a new mapping requirement for tree canopy which is to be completed by December 31, 2026. Using available, existing data, permit holders are required to map tree canopy to support stormwater management on permittee-owned or operated properties. Permittees shall develop and follow a methodology to intentionally identify canopy for stormwater management purposes, which may be updated annually or as needed. By December 31, 2028, permit holders are required to adopt and implement tree canopy goals and policies to support stormwater management.

SW 7.2.2 Stormwater Management Action Planning (SMAP)

In 2023, the City prepared a SMAP, in accordance with the 2019-2024 NPDES Phase II Permit. As required by the 2024-2029 NPDES Phase II Permit, the City will conduct a second phase following a similar process for one new priority catchment or additional actions for an existing SMAP. The SMAP actions and planning process will support the implementation in the Stormwater Management for Existing Development (SMED) Program with the identification of strategic investments, including stormwater projects and related actions.

The updated SMAP is to be completed by March 31, 2027 and will include:

- Stormwater facility retrofits needed for the SMAP area and projects that address transportation-related runoff from high traffic areas.
- Land management, development strategies, or actions identified for water quality management.
- Identification of changes needed to local long-range plans to address SMAP priorities, if applicable.
- Proposed implementation schedule and budget sources for short-term actions and long-term actions.

SW 7.2.3 Stormwater Management for Existing Development (SMED)

Strategic investments identified in the City's SMAP or similar stormwater planning processes will be included in the City's SMED Program. The intention of the SMED program is to control or reduce stormwater discharges to waters of the State from areas of existing development. The City's SMED Program will focus on strategic stormwater investments over longer planning time frames. It will also consider opportunistic stormwater investments identified by leveraging projects outside of SMAP areas to improve stormwater management and infrastructure.

SW 7.3 Future Program Needs to Meet Regulatory Requirements

The City has made significant strides in its stormwater management program as a result of implementing NPDES Phase II Permit requirements over the past several years. The 2024-2029 NPDES Phase II Permit builds on the 2019-2024 NPDES Phase II Permit program and increases certain requirements as well as adds new requirements.

This chapter quantifies the anticipated increase in effort, in terms of staffing FTEs, to meet the 2024-2029 NPDES Phase II Permit. In general, the City's philosophy at this time is to add the minimum level of staff and resources needed to meet NPDES requirements. Other areas such as Capital Improvement Program (CIP) projects or repair and replacement program will remain at approximately the same level of service. However, as the inventory of stormwater infrastructure increases, more staffing is anticipated to be needed to operate and maintain the Stormwater Utility.

SW 7.3.1 Operation and Maintenance Program Activities

Table SW 7-1 presents a summary of the future stormwater maintenance and operations program activities. Table SW 7-1 is similar to Table SW 5-2 except that it includes adjustments to account for changes in the NPDES permit requirements and expected increases in infrastructure due to development, annexations, and other improvements.

Details regarding Table SW 7-1 development are listed as follows:

- The number of 'Units to be Maintained' shown in **bold** text in Table SW 7-1 denote increases from Table SW 5-2. The increases are attributed to new projects involving stormwater improvements, developments that are being annexed, or increases in activities due to permit requirements.

- Cleaning and Inspection Activities.
  - Catch basins are inspected and cleaned once per year. It is expected that that the number of City-owned catch basins will increase from 3,501 to 3,550 due to proposed projects included in this plan.
  - Ditches are cleaned once per permit cycle, or once every five years.
  - Street sweeping requirements have increased. The 2024-2029 NPDES permit will require the City to sweep priority areas at least once between July and September each year and at least two additional times per year to provide additional water quality benefits. For this reason, the 60 miles per year that the City normally sweeps, as reported in Table SW 5-2, was multiplied by three as reported in Table SW 7-1.
  - Filter Maintenance includes water quality cartridge filtration units. The number of units the City maintains has gone up in recent years and is expected to increase over the permit cycle from approximately 165 to 250 units. For example, the Blueberry Lane Stormwater Improvement project included 19 new filter vaults that stored multiple filtration units. The Beaton Road/Industrial Area Stormwater Improvement project will also include installing nine new filter vaults with multiple filtration units.
  - Inspection and Cleaning of Control Structures and Oil-Water Separators was not increased in Table SW 7-1. The 74 structures will continue being inspected and cleaned once per year.
  - Stormwater retention pond-swale maintenance will continue being performed once per year.
  - The number of culverts that require maintenance is expected to increase slightly from 240 to 250 due to proposed improvement projects.
  - Conveyance pipe cleaning is anticipated to increase from 78 to 90 miles of pipe over the permit cycle due to improvements and annexations.
  - Detention/Retention pond inspection, cleaning, and vegetation management is anticipated to increase from 27 ponds to 40 ponds over the permit cycle.
  - Underground Detention Vaults are anticipated to increase from 20 during the permit cycle; however, the amount is unknown. To plan for increased maintenance needs, it is assumed that all vaults will be cleaned once per year.
  - Stormwater mainline repairs, manhole repairs, stormwater outfall/weir repairs, catch basin repairs, and catch basin replacements are also expected to increase slightly over the permit cycle.
- Based on Table SW 5-1, the City currently has 4.38 FTE labor available to perform operation and maintenance activities.
- Projected labor for performing operation and maintenance activities are expected to increase from 4.38 FTE to 5.86 FTE, or an increase of approximately 1.5 FTE. It is recommended that the City plan for additional staff for the purpose of meeting permit and operational requirements.

Table SW 7-1
Future Stormwater Maintenance Activities

Maintenance Activity	Units to be Maintained	Production	Estimated Hours / Year	Daily Production	Crew Size	Units Processed Per Year	Years to Process All Units	Full-time Labor Equivalent (FTE)
Catch Basin Cleaning	**3,550**	Each	**415**	35	3	1,816	2.0	0.83
Catch Basin Inspection	**3,550**	Each	**145**	100	3	1,813	2.0	0.29
Ditch Clearing – Vegetation Control and Sediment Removal	79,200	Linear Feet	80	1,600	3.75	16,000	5.0	0.20
Street Sweeping	**180**	Miles	**380**	3.8	1	181	1.0	0.25
Filter Maintenance	**250**	Each	**200**	10	3	250	1.0	0.40
Inspect and Clean Control Structures and Oil/Water Separators	38/36	Each	74	8	3	74	1.0	0.15
Storm Retention Pond – Swale Maintenance	2.7	Miles	140	0.15	3	2.6	1.0	0.28
Culvert Jetting and Vactoring	**250**	Each	**80**	5	3	50	5.0	0.16
Clean Pipes	**90**	Miles	**290**	0.5	3	18.1	5.0	0.58
Clean Retention/Detention Ponds – Annual Vegetation Maintenance and Inspection	**40**	Each	**160**	2	4	40	1.0	0.43
Clean Retention/Detention Ponds – Large Scale, Vegetation Maintenance	**40**	Each	**108**	1	7	14	3.0	0.50
Clean Retention/Detention Ponds – Sediment Management	**40**	Each	**135**	0.8	4	14	3.0	0.36
Clean/Maintain Underground Vaults	20	Each	**160**	1	7	20	1.0	0.75
Storm Mainline Repairs	**1,000**	Linear Feet	**60**	150	6	1,000	N/A	0.24
Storm Manhole Repairs	**6**	Each	**48**	1	3	6	N/A	0.10
Storm Outfall/Weir Repairs	**3**	Each	**24**	1	3	3	N/A	0.05
Catch Basin Repairs	**10**	Each	**80**	1	4	10	N/A	0.21
Catch Basin Installs	**4**	Each	**32**	1	4	4	N/A	0.09
							Field Crew Labor **Needed** (FTE):	**5.87**
							Field Crew Labor **Available** (FTE):	**4.38**
							Difference (FTE):	**-1.49**

Note:
The number of ‘Units to be Maintained’ shown in bold text denotes increases from Table SW 5-2. The increases are attributed to new projects involving stormwater improvements, developments that are being annexed, or increases in activities due to permit requirements. The number of 'Estimated Hours / Year' shown in bold text denotes increased time needed to maintain additional units.

THIS PAGE INTENTIONALLY BLANK.

SW 7.3.2 Other Programmatic Activities

Other programmatic activities related to the NPDES Phase II Permit are described as follows:

Management and Administrative

There are several separate activities within the broader Management and Administrative category. Most of the activities will not be affected by the new permit requirements. However, there are a few exceptions. First, Stormwater Plan Review is projected to increase in the future, mostly in part due to the greater complexities of stormwater design that will incorporate LID requirements. Second, Stormwater Plan Review is anticipated to increase as City staff becomes familiar with the recently approved 2024 Ecology Stormwater Management Manual for Western Washington.

Illicit Discharge Detection and Elimination (IDDE)

The City will continue to implement IDDE requirements that include field screening to identify and trace illicit discharges, characterize them, and then work to eliminate them.

New Development, Redevelopment, and Construction Sites

The City will continue to administer the following permit requirements related to development, redevelopment, and construction sites:

- Review Stormwater Site Plans.
- Inspect and enforce Erosion and Sediment Control BMPs.
- Inspect and enforce for proper construction of (permanent) stormwater BMPs and Maintenance Agreements.
- Annual inspections of private facilities approved after August 15, 2009.
- Inspection of all facilities (including catch basins) in new residential projects every 6 months until 90% of the lots are constructed/stabilized.
- Enforcement of timely maintenance of private stormwater BMPs.

Compliance With TMDLs

The City will continue implementing the following three compliance activities associated with TMDLs:

- Source control identification and elimination.
- Corrective actions for bacterial sources found.
- Monitoring and narrative evaluation of data.

Stormwater Management Program Reporting and Coordination

The City will continue to prepare and submit Annual Reports to Ecology on or before March 31 of each year, as required by the NPDES Phase II Permit.

Stormwater Monitoring

The City has elected to participate in Ecology's regional water quality monitoring program, with monitoring costs shared amongst the permittees. This effort will continue for the upcoming permit cycle.

SW 7.4 Future Program Needs Considering Annexations

The City presently encompasses a total area of approximately 6.41 square miles (4,104 acres). The potential area, if the City expands to all of the area within its urban growth area (UGA) boundary, is 7.65 square miles (4,894 acres). This equates to 1.24 square miles (790 acres) of potential expansion or about a 19 percent increase. This type of expansion typically does not occur all at once. Most often the growth occurs over a series of annexations.

This section provides an estimate of the ultimate program staffing level based on the assumption of City expansion to the full UGA as well as an estimate of the incremental staffing increases in FTEs that should be considered as smaller annexations occur.

The estimate for future needs under the scenario that the City fully expands to the UGA assumes that the infrastructure quantities to be maintained would be roughly proportional to the increase in corporate area. Another assumption is that maintenance frequencies would be in accordance with the current NPDES Phase II Permit. It also assumes that current land use conditions occur within the existing City boundary. In other words, it does not include estimated increases for full built out based on maximum allowable zoning. The City does expect some redevelopment within the UGA during the planning period which would require parcel owners to manage their stormwater onsite. This would require landowners to install and maintain onsite stormwater management systems.

Regarding maintaining stormwater systems acquired through future annexation, the 2015 plan estimated that the City should plan for approximately 2.0 FTEs for 1,000 acres. For full expansion of the 790 acres available, it is estimated that an additional 1.6 FTEs would be needed. This estimate compares with the recommendation to add 1.5 FTE to support future operation and maintenance, as shown in Table SW 7-1.

Currently, there are three proposed annexations within the City:

- Vista development near the 13700 block of Ingraham Road (103 existing homes).
- Conner annexation near Monroe High School at the 16900 block of Tester Road (proposed 3 home short plat).
- The North 30 development near the 12500 block of 175th Avenue SE just east of the Woodlands neighborhood (approximately 30-acres of undeveloped land).

It is estimated that annexation will continue through the permit cycle. System annexation and expansion recommendations include:

- Regularly review the impacts on the Stormwater Management Utility of expansion of infrastructure from both development and City projects.
- Periodically review staffing and equipment levels to assure that appropriate levels of resources are matched to the City's goals.

SW 7.5 Evolving Requirements

Design requirements and the need for different types of stormwater facilities have evolved significantly over time. Older stormwater systems were built primarily to provide conveyance. Flow control, such as ponds and infiltration facilities used to detain or retain stormwater, have been designed for many years using various design storms and performance metrics. Newer systems provide both flow control and water quality benefits. Engineering design continues to evolve as more is learned about modeling storms and the potential for water quality impacts related to stormwater. As climate changes and new data becomes available, design standards are expected to continue to be revised.

SW 7.5.1 Climate Change

The Stormwater Utility must continually adapt to variations in storm intensity and duration to effectively manage the stormwater system. This presents an ongoing challenge because storm events can be highly variable. Long-term trends associated with regional and global climate change are uncertain. The University of Washington Climate Impacts Group predicts changes in extreme precipitation, sea level rise, and changes in temperatures. The projected change in the 25-year, 24-hour precipitation shows an average increase of 11% increase from historical (1981-2010) to 2050[1]. Projected sea level rise near the Snohomish River estuary for year 2050 ranges from 0.2 feet to 1.4 feet[2]. Changes in average summer (June to August) maximum temperatures are predicted to increase by 3.8 degrees for Monroe when comparing years 2020-2049 versus 1980-2009[3]. While the projections are variable and there is uncertainty as to how significant the changes may be, they provide context for what challenges might lie ahead for the City's stormwater system.

For example, larger storms may not be accommodated by portions of the City's conveyance system, which may contribute to flooding. In addition, the City has several stormwater outfalls that discharge into the tributaries to the Snohomish River which could be impacted by rising sea levels. Also, higher summer temperatures have the potential to reduce stream flows and negatively affect water quality.

It will be beneficial for the City to further evaluate potential program impacts related to climate change. In the long-term, the City may need to consider upgrading infrastructure to accommodate larger storms and/or adding new infrastructure to improve flood control and water quality. The City may also need to adapt its approach to storm runoff management to address potential temperature changes through increased use of infiltration and/or changes in stormwater detention and water quality treatment design.

SW 7.5.2 Additional Regulations

Additional regulations related to stormwater and surface water may arise during the time frame of this Plan. As additional regulations arise, the Stormwater Management Utility may need to adjust staffing and spending to accommodate changes. The City may recommend reprogramming existing activities within

[1] University of Washington Climate Impacts Group. Projected Changes in Extreme Precipitation (uw.edu) Tool. University of Washington, Seattle, WA.

[2] University of Washington Climate Change Impacts Group. Interactive Sea Level Rise Data Visualizations (uw.edu) Tool. University of Washington, Seattle, WA.

[3] University of Washington Climate Change Impacts Group. Washington County Climate Projections (uw.edu) Tool. University of Washington, Seattle, WA.

existing funding levels to accommodate unforeseen changes or it might seek to increase rates to expand its program.

SW 7.6 Future Program Recommendations

SW 7.6.1 Staffing Recommendations

Based on the analyses provided in Sections SW 7.3 and SW 7.4, it is recommended that the City add 1.5 FTE to the Stormwater Utility to support operation and maintenance of additional infrastructure and implement NPDES Phase II Permit requirements.

SW 7.6.2 Recommended Actions

There are several prioritized action items for the Stormwater Utility to address. The importance of the action items is prioritized as:

- Tier 1 – These items are essential to the ongoing mission of the Stormwater Management Utility. Noted items are needed for compliance with the NPDES Phase II Permit and have requirements that are to be addressed on a specific timeline.
- Tier 2 – These actions are highly valuable for the Stormwater Management Utility in pursuit of its mission. Actions include maintaining and improving existing programs and long-term planning.

Tier 1 Actions

- Complete planned drainage and environmental CIP projects.
- Review and update Stormwater Management Utility rates to support capital and operating costs as well as debt service requirements.
- NPDES Requirement – Prepare Annual Reports for each calendar year and submit them by March 31 of the following year.
- NPDES Requirement – Complete Tree Canopy Mapping by December 31, 2026.
- NPDES Requirement – Prepare Stormwater Management Action Plan (SMAP) Update by March 31, 2027.
- NPDES Requirement – Implement the Stormwater Management for Existing Development (SMED) Program.
- NPDES Requirement – Develop and implement a Municipal Street Sweeping Program by July 1, 2027.
- NPDES Requirement – Implement a Municipal Operation and Maintenance plan by July 1, 2027.
- NPDES Requirement – Prepare Tree Canopy Goals and Policies to support stormwater management by December 31, 2028.
- NPDES Requirement – Maintain stormwater system map showing locations of all known municipal separate storm sewer system (MS4) outfalls and discharge points. By December 31, 2026, the required format for mapping is an electronic format with fully described mapping standards. By March 31, 2027, permittees shall submit locations of all known MS4 outfalls according to the standards provided in the Annual Report.

- NPDES Requirement – Continue to review and revise LID codes and policies.
- NPDES Requirement – Prepare to adopt the Washington State Department of Ecology 2024 Stormwater Management Manual for Western Washington by June 30, 2027

Tier 2 Actions

- Prepare for 2029 NPDES Permit issuance.
- Prepare for the next Stormwater Comprehensive Plan Update in 2030.
- Evaluate project and program impacts from climate change.
- Review and update maintenance standards, as needed.
- Continue to train municipal staff to correctly identify and report spills.
- Continue to evaluate construction site runoff ordinances and pre-con site inspections.
- Review the Stormwater Management Utility's Emergency Preparation Plan.
- Maintain and update community-based social marketing strategies.

THIS PAGE INTENTIONALLY BLANK.

Chapter SW 8 Problem Identification

This Chapter discusses the stormwater drainage and water quality issues identified by the City, problem areas selected for hydrologic and hydraulic modeling, analyses and results, and proposed recommendations. A total of 24 problem areas were identified by the City with two problem areas selected for modeling.

SW 8.1 General Description and Information

The list of stormwater drainage and water quality problems was developed using several sources, including projects previously identified in the City's 2015 Stormwater Comprehensive Plan that were not completed, projects identified by the Stormwater Management Action Plan (SMAP) (Landau, 2023)[1], and projects identified by City Public Works Department staff. The initial list of problems included more than 30 projects; however, some projects have been completed, and some projects were combined. The resulting list includes 24 stormwater drainage and water quality projects. Problems were discussed with Public Works staff, evaluated, and ranked from highest to lowest priority. Many of the problem areas were observed in the field with the City to improve understanding and collaborate on alternatives and recommendations. Table SW 8-1 describes the 24 identified projects and associated drainage/water quality issues. Projects are numbered SW-1 to SW-24 and are presented on Figure SW 8-1.

Two of the higher priority issues were selected by the City for hydrologic modeling and hydraulic analysis for the purpose of developing more detailed recommendations, beyond what is presented in Table SW 8-1. The two projects are SW-2: Beaton Ditch and SW-9: Beaton Road/Industrial Park. Projects SW-17 through SW-24 are carried forward from the City's 2023 CIP.

Table SW 8-1
Stormwater Drainage and Water Quality Issues

No.	Name	Issues
SW-1	Lake Tye South Inlet	▪ Bioswale is not working as designed and results in water quality concerns.
SW-2	Beaton Ditch	▪ Problems with debris accumulation in the ditch and associated flooding ▪ Limited access for operation and maintenance.
SW-3	Arbor Heights Ditch	▪ The ditch is prone to flooding caused by the plugging of the adjacent stormwater vault inlet pipe. ▪ Access to clear the storm pipe is difficult during high flows. ▪ This issue has resulted in flooding of the crawl space of a neighboring home.
SW-4	Tester Road	▪ Flooding occurs along Tester Road between Arbor Heights and the roundabout. ▪ Accumulation of leaves leads to plugging of pipe and catch basin inlets.

[1] Landau Associates, Inc. (2023, March 30). *Stormwater Management Action Plan (SMAP), City of Monroe, WA*. Landau Associates, Inc.

No.	Name	Issues
SW-5	Downtown Porous Concrete	▪ Porous concrete in the parking lane is not functioning. ▪ Water ponds for long periods of time and creates a safety issue for pedestrians.
SW-6	Tyler Lane Storm Basin	▪ Stormwater is connected to the sanitary system to avoid flooding private property. ▪ The area is in a closed depression with no stormwater outlet.
SW-7	Magnuson Park	▪ The existing infiltration system within the park is not functioning and causes street flooding. ▪ The system is blocked with roots and sediment and is not accessible for cleaning.
SW-8	154th and 170th Avenue Pond	▪ The existing pond is located between homes with little access for O&M. ▪ The outlet on the south end plugs with debris and is difficult to maintain during flooding. ▪ Safety issues occur during flooding due to lack of access. ▪ When the outlet plugs, water floods the roadways to the north of the pond. ▪ The stream to the south needs riparian improvements.
SW-9	Beaton Road / Industrial Park	▪ Recurring drainage problems due to limited stormwater system and blocked ditches. ▪ Pavement is damaged due to ponding water and requires replacement.
SW-10	Sams Street	▪ A prior project paved over the gutter lines. ▪ During storm events, standing water occurs at various locations and takes days to drain. ▪ Catch basins and inlets occur at the intersections only.
SW-11	Park Street and Powell Street	▪ Localized stormwater problems. No drainage system.
SW-12	Monroe Street and Park Street	▪ Localized stormwater problems. No drainage system.
SW-13	Monroe Street and Kelsey Street	▪ Localized stormwater problems. No drainage system.
SW-14	Park Street and Roberts Street	▪ Localized stormwater problems. No drainage system.
SW-15	Concrete Pond 149th Street and 173rd Avenue	▪ Operation and maintenance are difficult and costly due to limited vehicle access.
SW-16	Oil-Water Separator Vault near Seventh-day Adventist Church	▪ The existing oil-water separator vault cannot be properly cleaned because the coalescing plate pack does not fit through the opening of the lid.
SW-17	Tjerne Retention Pond Fencing	▪ The existing stormwater pond requires fencing.

No.	Name	Issues
SW-18	Lake Tye Outfall Improvements	▪ The outfall structure at Lake Tye needs improvements due to operational and safety concerns.
SW-19	NPDES Required Capital Construction Facility Rehabilitation (SMAP)	▪ The Stormwater Management Action Plan (SMAP) will be used to identify projects throughout the City that require retrofits and/or rehabilitation to improve stormwater quality.
SW-20	Stormwater Retrofits - Filter Replacements	▪ To improve stormwater quality, retrofits and filter cartridge replacements are needed throughout the City.
SW-21	Drainage Improvements North Blakeley Dead End	▪ Isolated flooding due to failing infiltration system.
SW-22	Lord's Lake Dredge	▪ Accumulated sediments in Lord's Lake attribute to water quality issues.
SW-23	Crystalwood/197th AVE SE Drainage Improvements	▪ Stormwater pond outlet and downstream pipe/ditch system requires improvements to provide adequate conveyance.
SW-24	Fryelands Industrial Park North of Lake Tye to SR-2 Runoff Treatment	▪ Water quality concerns.

THIS PAGE INTENTIONALLY BLANK.

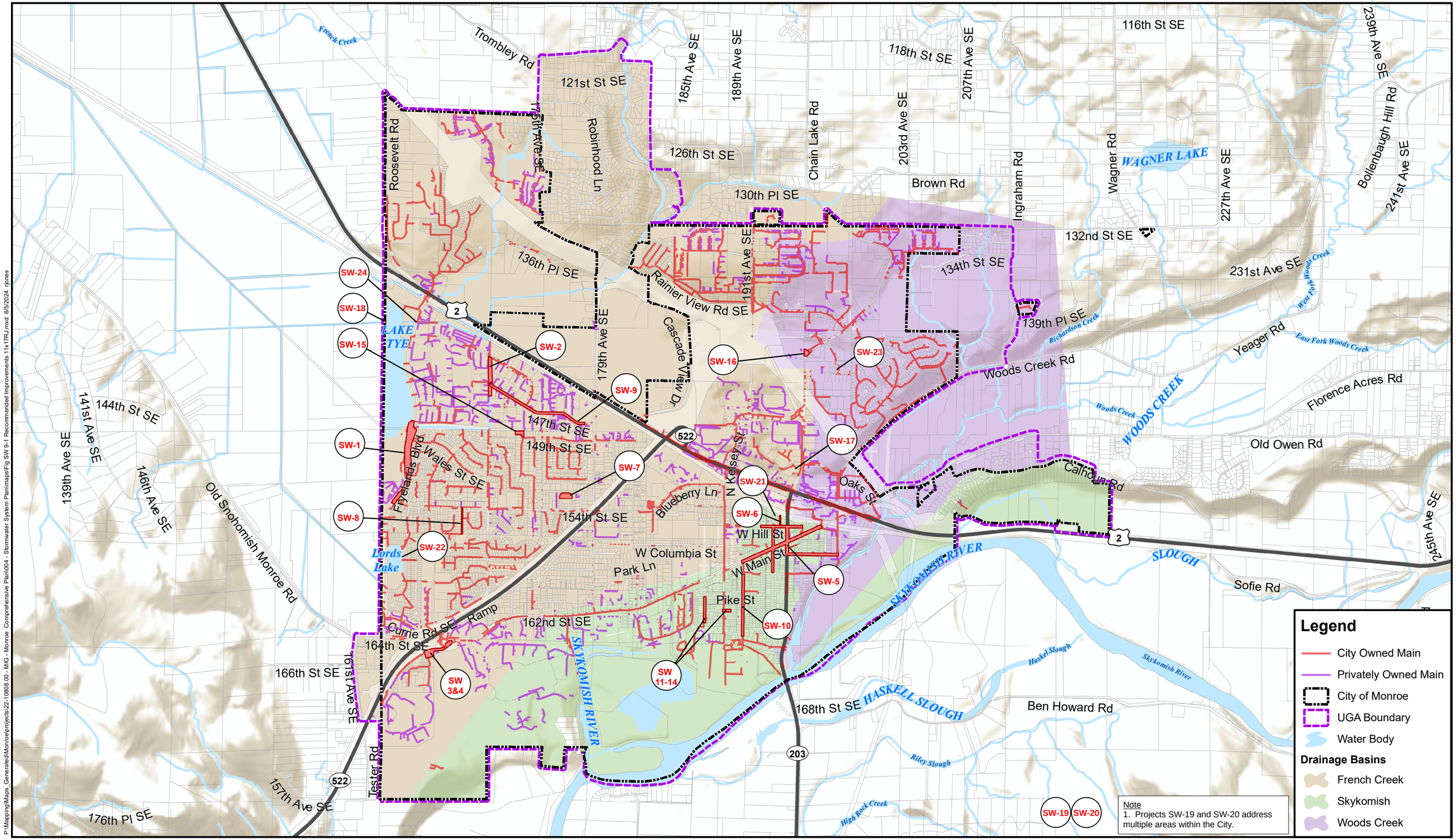

Legend

- City Owned Main
- Privately Owned Main
- City of Monroe
- UGA Boundary
- Water Body

Drainage Basins

- French Creek
- Skykomish
- Woods Creek

Note
1. Projects SW-19 and SW-20 address multiple areas within the City.

Stormwater System: City of Monroe 2024

Snohomish County base data 2024

Data sources supplied may not reflect current or actual conditions. This map is a geographic representation based on information available. It does not represent survey data. No warranty is made concerning the accuracy, currency, or completeness of data depicted on this map. BHC Consultants LLC., assumes no responsibility for the validity of any information presented herein, nor any responsibility for the use or misuse of the data.

N

0 0.5 1 Miles

Capital Improvement Projects

Utility Systems Plan - Stormwater
City of Monroe, Washington
September 2024

Figure
SW 8-1

COPYRIGHT © 2024 BHC CONSULTANTS LLC., ALL RIGHTS RESERVED

P:\Mapping\Maps_Generated\Monroe\projects\22-10808.00 - MIG - Monroe Comprehensive Plan\004 - Stormwater System Plan\maps\Fig SW 9-1 Recommended Improvements 11x17RJ.mxd 6/5/2024 rjones

THIS PAGE INTENTIONALLY BLANK.

SW 8.2 Projects Identified for Modeling

Beaton Ditch, SW-2, flows between Beaton Road and Tye Street from south to north and exists within a 30-foot-wide City easement. During a site visit, it was observed that the ditch is flat and experiences standing water. Sedimentation was observed throughout the ditch, specifically on the quarry spall type rocks that lined the bottom and sides. Trash, debris, and overgrown blackberry bushes are often observed within the existing ditch. The City described issues that occur along Beaton Ditch due to the lack of access on either side which makes it to maintain the ditch, manage vegetation, and remove debris. Modeling was completed for Beaton Ditch to evaluate the hydraulic capacity of the ditch and consider options to allow access for City maintenance vehicles and equipment along the entire length of the ditch.

Beaton Road/Industrial Park, SW-9, was selected for modeling due to the size and complexity of the anticipated project area, as well as the following drainage issues:

- There are multiple dead-end open channel ditches, some of which have been filled in to create on-street parking.
- There is a lack of stormwater conveyance infrastructure along Beaton Road and it is unknown if existing systems have been properly sized for the amount of surface water runoff the area receives.
- The resulting standing water along Beaton Road has caused damage to existing pavement.
- The roadway needs to be re-paved, and improvements to pedestrian and bicycle access is preferred.
- It is anticipated that roadway improvements will trigger the need to install water quality treatment best management practices (BMP).

Modeling was completed for Beaton Road to size stormwater conveyance pipes needed for a permanent and effective stormwater network. In addition, modeling was completed to size stormwater quality treatment facilities to treat runoff received along the roadway.

SW 8.3 Hydrology and Hydraulic Analysis

This section describes the hydrologic and hydraulic modeling completed for Beaton Ditch (SW-2) and Beaton Road/Industrial Park (SW-9) and presents drainage basin boundaries, model assumptions, and results for each project.

SW 8.3.1 Basin Boundaries

The drainage basins for Beaton Ditch (SW-2) and Beaton Road/Industrial Park (SW-9) projects were determined using City Geographic Information System (GIS) utility mapping. Two drainage basins were defined as Beaton Road and Beaton Ditch and collect water from the basins that drain directly to the conveyance systems for the road and ditch, respectively. The SW-2 drainage area is 45.9 acres, or the total area of both basins. The SW-9 drainage area includes the Beaton Road basin, is 18.1 acres in size, and discharges into Beaton Ditch. Table SW 8-2 presents a summary of the drainage basin areas. Land cover, including pervious and impervious areas for each basin, was estimated based on City zoning, as described in Section SW 8.3.2.

Table SW 8-2
Drainage Basin Areas

Basin	Pervious Area (acres)	Impervious Area (acres)	Total Area (acres)
Beaton Road (Project SW-9)	0.9	17.2	18.1
Beaton Ditch	1.4	26.4	27.8
Total Area (Project SW-2)	**2.3**	**43.6**	**45.9**

SW 8.3.2 Hydrologic Modeling Inputs

Hydrologic modeling for SW-2 and SW-9 included calculating 25-year and 100-year peak flow rates and water quality (WQ) design flow rates. Modeling was completed in MGSFlood Version 4.55, a continuous, rainfall-runoff computer model that is approved by the 2019 Washington State Department of Ecology (Ecology) Stormwater Management Manual for Western Washington (SWMMWW) (Ecology 2019)[2].

MSGFlood model assumptions are listed below, and model results are summarized in Table SW 8-3.

- Zoning: Industrial and a small area of mixed use.
- Land Cover: 95% impervious surface and 5% pervious surface.
- Soil Type: Glacial till soils, classified as Hydrologic Soil Group (HSG) C/D (USDA NRCS 2024)[3].
- Identical pre-developed and post-developed land cover conditions.

Table SW 8-3
Hydrologic Model Results

Basin	Basin Area (acres)	25-Year Peak Flow (cfs)	100-Year Peak Flow (cfs)	On-line WQ Flow Rate (cfs)	Off-line WQ Flow Rate (cfs)
SW-9: Beaton Road/Industrial Park	18.1	14.5	20.0	3.3	1.9
SW-2: Beaton Ditch	45.9	37.1	51.5	8.5	4.9

SW 8.3.3 Hydraulic Modeling Inputs

Channel and pipe hydraulics were evaluated using Bentley FlowMaster software Version V8i. FlowMaster was selected for the purpose of efficiently running several open channel and conveyance pipe options for both SW-2 and SW-9. Detailed modeling will be needed during the design phase of these projects due to limited information presently available, including pipe rim and invert elevations. Several assumptions were made for each project area, described as follows.

[2] Washington State Department of Ecology. (2019, July). *2019 Stormwater Management Manual for Western Washington (SWMMWW).* Washington State Department of Ecology.

[3] United States Department of Agriculture (USDA) Natural Resources Conservation Service (NRCS). (2024, June). Web Soil Survey. Accessed at: https://websoilsurvey.sc.egov.usda.gov/App/WebSoilSurvey.aspx. USDA NRCS.

SW-2 Beaton Ditch Hydraulic Modeling Assumptions

- Conveyances were sized for the 25-year peak flow and checked for erosion and flooding during the 100-year peak flow.
- FlowMaster was used to calculate the "normal depth" within a trapezoidal channel for the design flow.
- The City's online GIS utility map was used to determine that the depth of Beaton Ditch is approximately five feet based on invert and road elevations.
- Based on field observation, the existing ditch bottom width and side slopes were estimated at 9 feet and 2 feet horizontal to 1 foot vertical (2H:1V), respectively.
- Mannings roughness coefficient, "n" value:
  - Existing condition: n = 0.045.
  - Proposed alternatives: n=0.040.
- The longitudinal slope of the ditch is unknown and will require topographic survey during the design phase. For this analysis, a slope of 0.005 feet per foot (ft/ft) was used. This slope is the minimum slope for conveyance in the right-of-way per Section 4.2 of the City's Design, Construction, and Operations Standards (City Standards).
- Two 36-inch diameter existing pipes receive flow on the downstream end of the ditch and route flow to the north, beneath Tye Street, and then continue north and west prior to reaching State Route (SR) 2.
- Downstream tailwater was not included in the analysis. During the design phase a backwater analysis that considers the downstream system and potential for flow backing up into this system will be needed.

Based on these assumptions, several open channel configurations were evaluated with varying side slopes with the goal of reducing the channel's flow area to make room for an adjacent access road. It was determined that for Beaton Ditch to have sufficient capacity, the normal depth based on the 25-year peak flow rate should not exceed 4 feet to allow for 1 foot of freeboard within the channel. For the 100-year peak flow rate, the normal depth should not exceed 5 feet, which coincides with the estimated depth available. Results from the hydraulic analysis for SW-2 are further discussed in Section SW 8.4.1.

SW-9 Beaton Road/Industrial Park Hydraulic Modeling Assumptions

- FlowMaster was used to determine pipe sizes needed to convey stormwater from east to west along Beaton Road.
- Conveyances were designed for the 25-year peak flow and checked for excessive erosion and flooding during the 100-year peak flow.
- Mannings "n" value, n = 0.01, assuming PVC material in accordance with City Standards that require PVC pipe be used for storm drainage pipe from 18 to 24 inches in diameter.
- The longitudinal slope of the proposed conveyance pipe is unknown and will require topographic survey during the design phase. For consistency with the modeling for nearby SW-2 modeling, a slope of 0.005 ft/ft was considered for this analysis.

- Downstream tailwater was not included in the analysis. During the design phase a backwater analysis that considers the downstream system and potential for flow backing up into this system may be needed.

Using the assumptions above, a 24-inch diameter pipe was sized to convey the 25-year peak flow rate for the 18.1-acre drainage basin. The drainage basin was then broken up into three sub-areas based on pipe diameters of 12-inches, 18-inches, and 24-inches by prorating the 25-year peak flow to drainage area based on the available pipe capacity. Results from the hydraulic analysis for SW-9 are further described in Section SW 8.4.2.

SW 8.4 Modeled Alternatives and Recommendations

This section describes the alternatives and recommendations for SW-2 and SW-9 based on the modeling and analyses completed in Section SW 8.3.

SW 8.4.1 Beaton Ditch (SW-2)

Several improvement alternatives were initially discussed with the City regarding Beaton Ditch, including replacing the ditch with a piped system, maintaining the existing ditch and purchasing additional easement on one side of the ditch for the installation of a maintenance access road, and completing ditch improvements and access road installation within the existing 30-foot-wide City easement.

According to the Washington State Fish Passage website, Beaton Ditch appears to be classified as a fish bearing stream (WDFW, 2024)[4]. Performing construction work within or adjacent to a fish bearing stream requires significant permitting and potential mitigation. This constraint will need to be considered in project planning and cost estimating, because in-water permit acquisition can be a lengthy process and lead to a more expensive project.

Three alternative improvements were evaluated for Beaton Ditch. Alternatives 1 and 2 alter the channel side slopes while keeping the ditch bottom width, depth, and longitudinal slope the same. Altering the channel side slopes allows for the ditch to be narrower while maintaining a similar flow capacity. The benefit of a narrower ditch is that it may allow room on the side of the ditch, within the existing easement, for an access road. Alternative 3 proposes replacing the open ditch with a conveyance pipe. This alternative would reduce the potential for debris and trash accumulation within the ditch causing obstructions to flowing water within the ditch.

The three alternatives are described in the following paragraphs. Appendix SW-A includes a figure for Capital Improvement Project (CIP) SW-2. The figure shows the existing condition, the three alternatives, and recommended improvements. The City selected Alternative 2 as the preferred alternative to advance to the design phase.

Alternative 1: Modify the Right Slope Above the 2-Year Flow Level

This alternative does not change the left side slope and steepens the right side slope above the 2-year flow level. The 2-year flow level was selected because it is anticipated to be slightly above the Ordinary High Water Mark (OHWM) within the open channel. Work below the OHWM triggers a lengthy in-water permit process. The steeper slope on the right side would require a retaining wall or other slope protection

[4] Washington State Department of Fish and Wildlife (WDFW). (2024, June). Washington State Fish Passage Map. Accessed at: https://geodataservices.wdfw.wa.gov/hp/fishpassage/index.html. WDFW.

measures. Increasing a portion of the right side slope from approximately 2H:1V to 1H:1V narrows the overall ditch width by about 4 feet, which could be used for the installation of an access road. The City prefers a 10-foot wide access road; therefore, an additional 6-foot-wide easement would be needed along the length of the ditch. This poses a potential issue for the City because purchasing additional easement in this area may be difficult due to property fire codes and access. The benefit of this alternative is that it would require the least amount of permitting compared to other the alternatives due to the work within the ditch occurring above the 2-year flow level. Due to the complications related to acquiring new easements, the City does not plan to pursue Alternative 1.

Alternative 2: Modify the Ditch Within the Existing Easement

This alternative modifies the left and right side slopes of the ditch to make it narrower to create space for a 10-foot access road. The right side slope would be steepened, requiring a retaining wall or mechanically stabilized earth (MSE) wall. The major benefit of this alternative is that it would create space on the side of the ditch for a 10-foot access road without acquiring additional easement. More permitting work than Alternative 1 is expected for this alternative because work would occur along the entire cross section of the ditch including the bottom, thus triggering in-water permits. However, the channel may be restored to a more natural system following construction. Alternative 2 was selected by the City to advance to the design phase.

Alternative 3: Replace Ditch With a Pipe

This alternative was developed to explore the option of replacing the open ditch conveyance with a pipe system. The CIP SW-2 figure in Appendix SW-A shows a single 5-foot diameter pipe; however, dual pipes may be used, similar to the two existing 36-inch diameter pipes that discharge flow from the ditch. New stormwater catch basins would be installed at either end of the ditch and at intervals of approximately 300 feet to allow for routine Operation and Maintenance (O&M). An access road could be installed alongside or overtop the new conveyance pipes. Alternative 3 would require the most amount of permitting of the three alternatives due to the ditch being classified by WDFW as a fish bearing stream. For this reason, the City is not planning to pursue Alternative 3.

SW 8.4.2 Beaton Road/Industrial Park (SW-9)

A new stormwater conveyance system is the main improvement proposed for SW-9: Beaton Road/Industrial Park. The primary components of the new stormwater system are inlets, catch basins, and conveyance pipes. The sizes and lengths of this pipe are discussed in Section SW 8.3.3. Following the installation of a new stormwater system, the City plans to repave the street, add sidewalks, bicycle lanes, and on-street parking. Water quality treatment units will also be included in the design to treat stormwater collected in the drainage basin. The CIP SW-9 figure in Appendix SW-A shows the proposed improvements for Beaton Road.

The proposed stormwater conveyance pipe system starts about 500 feet west of the intersection of Beaton Road and 179th Avenue SE. This was determined because there are existing ditches and stormwater pipes at the east end of Beaton Road that convey flow to this point. This starting point coincides with the end of the existing sidewalk that runs along the south side of Beaton Road from the 179th Avenue SE intersection. From this approximate location, a new crosswalk will be installed and a new sidewalk will be located on the north side of the road throughout the project area. Americans with Disabilities Act (ADA) ramps are anticipated to be required along the sidewalk at several driveway crossings. Additional improvements include catch basins and inlets along the main stormwater conveyance pipe to collect flow along the curbline. Water quality treatment cartridge filter units were designed for an overall off-line WQ design flow

rate of 1.9 cubic feet per second (cfs). Several units will be installed to collect and treat flow along the edge of curb and convey the treated water into the stormwater main line. The conceptual WQ treatment design includes nine catch basin units, each containing eight Contech StormFilter cartridges. In all, approximately 72 cartridges are proposed.

Since the pavement in Beaton Road is planned to be disturbed for the installation of the stormwater conveyance system, the City plans to restore the roadway in conformance with the City's road standards. CIP SW-9 figure in Appendix SW-A presents a typical cross section for Beaton Road which was developed based on Division 3 City's Street Standards. Beaton Road is classified as a Collector Street and according to City GIS mapping, has 60 feet of available right-of-way. Standard Plan 300 requires a minimum pavement width of 32 feet, curbs and gutters, sidewalks, 10-foot-wide parking lane, and a bicycle lane. Standard Plan 301 requires a 10-foot-wide drive lane in each direction. The typical road section developed includes 10-foot-wide drive lanes, a sidewalk and parking on the north side of the road, and bicycle lanes in each direction. During the design phase of Beaton Road, different configurations of alternative transportation may be explored.

SW 8.5 Capital Improvement Plan

As stated in Section SW 8.1, the City identified 24 stormwater drainage and water quality problems that are present within the City. Two projects, SW-2 and SW-9, were selected for hydrologic modeling and hydraulic analyses, as discussed in Sections SW 8.2, SW 8.3, and SW 8.4. This section presents the remaining 22 problem areas and identifies conceptual recommendations. Table SW 8-4 presents recommendations for each problem area. Figure SW 8-1 presents the location of 24 Capital Improvement Projects.

Appendix SW-A includes figures for projects SW-1 through SW-16. Projects SW-17 through SW-24 were carried forward from the City's 2023 CIP; individual figures for these projects were not prepared.

Table SW 8-4
Stormwater Drainage and Water Quality Recommendations

Priority No.	Name	Recommendations
SW-1	Lake Tye South Inlet	▪ Remove swale, restore area around the stormwater outfall, and install water quality treatment units along Freylands Boulevard.
SW-2	Beaton Ditch	▪ Regrade the ditch and construct an access road for City operation and maintenance crews. ▪ Install a slide gate to control water in the ditch during operation and maintenance activities. ▪ Install new overflow structures with trash racks and restore the work area with native vegetation.
SW-3	Arbor Heights Ditch	▪ Install a larger inlet (with a bird cage type overflow), control vegetation, improve access for operation and maintenance.
SW-4	Tester Road	▪ Install rock check dams within the ditch, improve ditch capacity, install larger inlets (with bird cage type overflows) within the ditch, and install redundant catch basins near the bottom of the hill.

Priority No.	Name	Recommendations
SW-5	Downtown Porous Concrete	▪ Replace portions of concrete in parking strips with traditional concrete or hot mix asphalt pavement. ▪ Install new stormwater inlets and connect to the stormwater system.
SW-6	Tyler Lane Storm Basin	▪ Install a stormwater inlet, pretreatment structure, and infiltration system. ▪ Install an asphalt speed bump to control stormwater from running onto this area from the railroad right of way. ▪ Install asphalt curbs to contain and direct stormwater.
SW-7	Magnuson Park	▪ Replace the existing infiltration system with two new pretreatment structures, an infiltration system, and connecting pipes.
SW-8	154th and 170th Avenue Pond	▪ Install new pretreatment structures at pond inlets. ▪ Replace pond overflow structures at the pond outlet, improve access, clear vegetation, remove center wall, regrade pond bottom to improve flow through the pond. ▪ Improve riparian area south of pond outlet.
SW-9	Beaton Road / Industrial Park	▪ Install new stormwater inlets, catch basins, conveyance pipes, and water quality treatment facilities. ▪ Connect to the existing stormwater system. ▪ Abandon or demolish existing dead-end ditches and aging pipes and aging catch basins. ▪ Replace roadway pavement and install curbs, gutters, sidewalks, ADA curb ramps, and bicycle lanes.
SW-10	Sams Street	▪ Install new stormwater infrastructure between the intersections. Connect with the existing drainage system.
SW-11	Park Street and Powell Street	▪ Install new stormwater infrastructure and connect to the existing system.
SW-12	Monroe Street and Park Street	▪ Install new stormwater infrastructure and connect to the existing system.
SW-13	Monroe Street and Kelsey Street	▪ Install new stormwater infrastructure and connect to the existing system.
SW-14	Park Street and Roberts Street	▪ Install new stormwater infrastructure and connect to the existing system.
SW-15	Concrete Pond 149th Street and 173rd Avenue	▪ Remove broken concrete and regrade the pond bottom. ▪ Install vactor truck access road from the existing ramp to the outlet structure and restore the vegetation within the pond.
SW-16	Oil-Water Separator Vault near Seventh-day Adventist Church	▪ Repair the vault lid to allow for operation and maintenance. If the vault lid cannot be repaired, replace the vault lid or entire oil-water separator.
SW-17	Tjerne Retention Pond Fencing	▪ Install fencing around the existing pond.

Priority No.	Name	Recommendations
SW-18	Lake Tye Outfall Improvements	▪ Complete outfall structure improvements at Lake Tye to address operational and safety concerns.
SW-19	NPDES Required Capital Construction Facility Rehabilitation (SMAP)	▪ Implement projects throughout the City per the Stormwater Management Action Plan (SMAP).
SW-20	Stormwater Retrofits - Filter Replacements	▪ Complete stormwater quality improvements, including retrofits and filter cartridge replacements throughout the City.
SW-21	Drainage Improvements North Blakeley Dead End	▪ Improve the stormwater system to address flooding issues.
SW-22	Lord's Lake Dredge	▪ Dredge Lord's Lake.
SW-23	Crystalwood/ 197th AVE SE Drainage Improvements	▪ Improve the stormwater pond outlet and downstream pipe/ditch system to provide adequate conveyance.
SW-24	Fryelands Industrial Park North of Lake Tye to SR-2 Runoff Treatment	▪ Complete stormwater improvements to address water quality concerns.

SW 8.5.1 Lake Tye South Inlet (SW-1)

The purpose of this project is to address the underperforming stormwater quality pond and swale at the southeastern inlet of Lake Tye. A pre-design technical memorandum was prepared for this project (BHC, 2019)[5]. Lake Tye was originally designed and installed circa 1994 as a regional stormwater system, and over the years it has also become a significant recreational area for City residents. The small pond and swale at the southeast inlet to Lake Tye were originally installed to provide stormwater treatment prior to detention. It appears that the berm of the small pond was breached by flooding which has resulted in the underperformance of this stormwater quality facility.

During the pre-design phase, alternatives to repair or retrofit the pond and swale were ruled out due to environmental permit constraints. Regulatory agencies classify the stormwater conveyance ditch leading to the pond as a fish bearing stream and the pond and swale areas are considered jurisdictional wetlands. Less invasive alternatives were pursued for this reason.

[5] BHC Consultants, LLC. (2019, May 7). *Lake Tye Stormwater Treatment Project Technical Memorandum*. BHC Consultants, LLC.

The preferred pre-design alternative is to remove the failed berm so water can freely flow into Lake Tye and install WQ treatment upstream of the lake. Implementation would involve minor regrading of the pond and berm area. To offset potential impacts during construction, native vegetative plantings would be included in the design to improve habitat and aesthetics and provide shade. The project would also include adding approximately five water quality treatment units to provide enhanced water quality treatment of stormwater collected along Fryelands Boulevard.

SW 8.5.2 Beaton Ditch (SW-2)

See Sections SW 8.2, SW 8.3, and SW 8.4 for information and recommendations regarding SW-2.

SW 8.5.3 Arbor Heights Ditch and Tester Road (SW-3 and SW-4)

Project sites SW-3 and SW-4 are adjacent to one another and are considered a single CIP for mapping and cost estimating.

SW-3 is located upstream of SW-4 and includes the Arbor Heights ditch and stormwater vault, which is located beneath a sport court. A swale, located on the uphill side of the vault, directs flow to a vault inlet pipe. The existing pipe has a beveled end with a trash rack that tends to become clogged with leaves and debris which has resulted in flooding of private property, specifically the crawl space at 16625 167th Avenue SE. Recommended improvements include clearing vegetation and establishing an access path along the ditch for maintenance access and replacing the beveled inlet pipe with a bird cage type overflow structure to increase flow capacity and reduce the potential for the inlet plugging.

SW-4 includes the ditch downstream of the vault that runs along Tester Road. The ditch is steep and prone to flooding, where water is known to overflow the ditch onto the roadway. There are several deciduous trees in the area that contribute to the debris load in the fall which exasperates the drainage issues. At the bottom of this hill, near the roundabout at Main Street, there are flooding issues caused by the plugging of a pipe inlet within the ditch and plugging of a catch basin in the roadway near the roundabout. Recommended improvements include the installation of check dams along the steeper portion of the Tester Road ditch, replacing the beveled pipe inlet with a bird cage type inlet, adding a redundant bird cage type inlet within the ditch, and installing two redundant catch basins in the roadway with rim elevations that are slightly higher than that of the existing catch basin.

SW 8.5.4 Downtown Porous Concrete (SW-5)

The project area is bounded by East Hill Street to the north, North Madison Street to the west, East Fremont Street to the south, and South Ferry Street to the east. The main issue within this project area is that there are patches of non-functional porous concrete in the parking lanes, which causes water to pond for several days following a storm. It is unknown whether the porous concrete was installed incorrectly and/or if it has become clogged over time due to high traffic in these areas. The porous concrete sidewalks installed adjacent to the parking lanes appear to be functional, the problem areas are within the parking lanes. Recommended improvements are to remove non-functioning sections of porous concrete and replace them with either traditional concrete or hot mix asphalt (HMA). Several new catch basins and storm drainpipes are needed to connect to the existing stormwater system. Since this project was initially constructed with Ecology funding, the implications of replacing this pervious surface with an impervious surface needs to be evaluated during design.

SW 8.5.5 Tyler Lane Storm Basin (SW-6)

The project area is located at the north end of Tyler Lane, just south of the railroad tracks, in the downtown area. There is no stormwater collection and conveyance system at this site and stormwater presently enters the sewer system through a single catch basin. If the catch basin were closed to stormwater, the result would include flooding of nearby a residence. Recommended improvements for this project include installing a new HMA "speed bump" to control water from the railroad right-of-way from running onto the project area. Additionally, recommendations include installing a water quality pre-treatment structure, an infiltration system sized for a portion of Tyler Lane, and associated catch basins and storm drainpipes. There is also a roof drain on northwest corner of 202 North Lewis Street that needs to be routed to the proposed stormwater system. The installation of a thickened asphalt edge to divert water away from nearby homes may also be needed to contain stormwater within the right-of-way.

SW 8.5.6 Magnuson Place Infiltration (SW-7)

This project area is bound by Magnuson Place SE on the north, Ester Avenue Seon the west, and Hilding Drive SE on the east. There is an existing infiltration pipe beneath the Magnuson homeowner's association Park that connects into catch basins on Magnuson Place SE. Based on conversations with City staff, the infiltration system plugs, backs up into the catch basins, and then floods the street. According to City as-built records, the system was installed around 1991. It appears that the aging system is plugged with sediment, debris, and roots, causing water to back up and flood the right-of-way. The City is unable to adequately clean the existing infiltration system due to a lack of access. Recommended improvements include installing two water quality pre-treatment structures, each located downstream of two existing catch basins; replacing the existing infiltration pipe with a solid pipe; and installing new catch basins, a new infiltration system, storm drainpipe, and cleanouts.

SW 8.5.7 154th and 170th Avenue Pond (SW-8)

The existing pond is located south of 154th Street SE, between 168th Avenue SE to the west and 170th Avenue SE to the east. The existing pond is long and narrow and runs from north to south within a rock lined channel. It is located behind homes on each side with access from 154th Street SE at the north end and through a homeowner's association community park on the south end. This pond floods during heavy rains and has standing water most of the year due to the outlet clogging and a rock wall located in the middle of the pond. When flooding occurs, water backs up to the north, crossing 154th Street SE and into an alley behind several homes. The pond site is prone to the dumping of garbage and is difficult to maintain due to limited access, a mid-pond rock wall and a single pipe outlet in the middle of the channel at the south end. Proposed improvements include installing storm water quality structures upstream of the pond within the right-of-way, cleaning out vegetation and debris from within the pond, removing the center wall, regrading the pond bottom, installing redundant overflow structures that can be safely accessed from the side of the pond, and improving the access at the southern end near the outlet.

SW 8.5.8 Beaton Road/Industrial Park (SW-9)

See Sections SW 8.2, SW 8.3, and SW 8.4 for information and recommendations regarding SW-9.

SW 8.5.9 Sams Street (SW-10)

The project area includes three blocks along Sams Street, between W McDougall Street and Terrace Street. The area incurs street flooding due to a lack of stormwater infrastructure. There are existing inlets and catch basins located at the street intersections, but the area is missing mid-block stormwater inlets and associated drainage piping and catch basins. Recommended improvements along Sams Street include

installing stormwater inlets, catch basins, and drainage pipes and connecting them to the existing stormwater system.

SW 8.5.10 Park and Powell (SW-11), Monroe Street and Park Street (SW-12), Monroe Street and Kelsey Street (SW-13), Park Street and Roberts Street (SW-14)

Projects SW-11 through SW-14 are considered as a single construction project for the development of maps and project costs. The project area is located along Park Street between Roberts Street and Powell Street and near the intersection of Monroe Street and South Kelsey Street. The area has issues with localized flooding and the potential for stormwater to run onto private property due to the lack of stormwater infrastructure in the right-of-way. Since Park Street was recently paved, solutions were discussed that would limit trenching in the new roadway. Recommended improvements include the installation of catch basins at low points with a stormwater conveyance pipe connecting to the nearest mainline, as well as installing HMA extruded curb to collect and guide water to new and existing catch basins.

SW 8.5.11 Concrete Pond at 149th Street and 173rd Avenue (SW-15)

The purpose of this project is to improve access into the pond and control structure for maintenance. The existing stormwater pond bottom is lined with concrete that has experienced cracking and differential settlement. It does not appear that the pond bottom can support the weight of the City's vactor truck that is normally used for maintaining the pond. Currently, a backhoe is used to scrape sediment from the pond bottom and place it into a truck to be removed from the site. Cleaning the pond in this manner can be a time-consuming process. In addition, there is an existing trench down the middle of the pond that complicates access. The existing outlet structure is located at the opposite corner from the access ramp and there is no access to the structure from the top of the pond near the outlet structure. The recommended improvements include removing the existing concrete bottom and trench, regrading the pond bottom, and establishing a stable access route for a vactor truck to access to the outlet structure.

SW 8.5.12 Seventh-Day Adventist Oil-Water Separator Vault (SW-16)

An existing oil-water separator, located along Chain Lake Road near the Seventh-day Adventist Church, was identified by the City as a problem for routine O&M. The City noted that the opening on the vault lid for the oil-water separator is not large enough to allow for cleaning. When the vault lid is open, there is not enough room to remove the coalescing plates or fit a vactor tube for cleaning. The entire lid may need to be removed to allow for maintenance. Recommended improvements include working with the supplier of the oil-water separator to retrofit or repair the existing system. Depending on the potential repairs/retrofits, the oil-water separator may need to be replaced.

SW 8.5.13 Projects Carried Forward From 2023 CIP (SW-17 Through SW-24)

Projects SW-17 through SW-24 were carried forward from the City's 2023 CIP. Stormwater issues and recommendations for these projects are shown in Table SW 8-1 and Table SW 8-4, respectively.

SW 8.6 Opinions of Probable Project Cost

Opinion of Probable Project Costs (OPPC) were prepared for CIP SW-1 through SW-16. Cost summaries are provided in Appendix SW-B. OPPCs include 9.4% Washington State sales tax (WSST) and 30% construction contingency. Unless specifically noted, OPPCs include 20% for planning, engineering design, and permitting services and 15% for services during construction (including inspection and observation

services). Construction costs were estimated from bid results for similar projects and from RS Means cost data for 2024. Costs associated with financing, easements, right-of-way, or property acquisition are not included, unless specifically noted.

Costs included for CIP SW-17 through SW-24 were carried forward from the City's 2023 CIP. Detailed OPPCs were not prepared.

Projects have been defined only to a preliminary level of design. Major capital projects will require further definition and refinement as part of the design process. Actual costs can and will differ from the opinions of probable costs. Volatility in the bidding climate, the number of contractors bidding on a project, and their approach to bidding and completing the work will impact actual project costs.

The CIP was divided into 6-year and 20-year planning periods. Values for the 6-year planning period, shown in Table SW 8-5 are in future dollars that include an inflation rate of 3.0 percent for years one through six extrapolated from 2024-dollar valuations.

Values for 20-year CIP project costs, presented in Table SW 8-6 include a 3.0 percent inflation for years one through six and a 2.4 percent inflation rate for years seven through 20. Similar assumptions were used in the development of costs in Table SW 8-6 as those presented in Table SW 8-5. Over the 20-year planning horizon, the total cost for the 20-year CIP program is approximately $44 Million.

Table SW 8-5
CIP Opinion of Probable Project Costs: Years 1-6 (2025-2030)

CIP No.	Project Description	Capacity / Flooding	Water Quality	O&M	Regulatory	Safety	Opinion of Probable Project Cost [1, 2]	Year
SW-17	Tjerne Retention Pond Fencing			☑		☑	$ 80,000	2025
SW-18	Lake Tye Outfall Improvements		☑	☑		☑	$ 230,000	2025-2026
SW-5	Downtown Porous Concrete	☑	☑			☑	$ 2,760,000	2025-2026
SW-19	NPDES Required Capital Construction Facility Rehabilitation (SMAP)		☑		☑		$ 220,000	2025-2027
SW-1	Lake Tye South Inlet		☑	☑			$ 970,000	2026-2028
SW-2	Beaton Ditch	☑	☑	☑		☑	$ 1,350,000	2027-2029
SW-20	Stormwater Retrofits - Filter Replacements		☑				$ 110,000	2028
SW-16	Oil-Water Separator Vault near Seventh-day Adventist Church		☑		☑		$ 80,000	2028
SW-9	Beaton Road / Industrial Park	☑	☑				$ 6,400,000	2028-2030
SW-11/12/13/14	Park, Powell, Monroe, Roberts, and Kelsey Streets	☑		☑			$ 1,100,000	2029-2030
SW-8	154th and 170th Avenue Pond	☑	☑	☑		☑	$ 180,000	2030
					Total 6-year (2025-2030) CIP Cost Opinion		**$ 13,480,000**	

Notes:
1) Costs are in future dollars. Future Values utilize an inflation rate of 3.0 percent for years one through six.
2) Project implementation schedule will be dependent on available funding.

Table SW 8-6
CIP Opinion of Probable Project Costs: Years 7-20 (2031-2044)

CIP No.	Project Description	Capacity / Flooding	Water Quality	O&M	Regulatory	Safety	Opinion of Probable Project Cost [1, 2]	Year
SW-8	154th and 170th Avenue Pond	☑	☑	☑		☑	$ 780,000	2030-2031
SW-22	Lord's Lake Dredge	☑	☑	☑			$ 490,000	2031
SW-7	Magnuson Park	☑		☑		☑	$ 480,000	2031-2032
SW-3/4	Arbor Heights Ditch and Tester Road	☑		☑		☑	$ 610,000	2031-2032
SW-21	Drainage Improvements North Blakeley Dead End	☑	☑	☑			$ 40,000	2032
SW-6	Tyler Lane Storm Basin	☑	☑		☑		$ 260,000	2032
SW-23	Crystalwood/197th Avenue SE Drainage Improvements	☑		☑			$ 420,000	2032-2033
SW-10	Sams Street	☑		☑		☑	$ 790,000	2032-2033
SW-15	Concrete Pond 149th Street and 173rd Avenue			☑		☑	$ 700,000	2032-2033
SW-24	Fryelands Industrial Park North of Lake Tye to SR-2 Runoff Treatment		☑		☑		$ 1,440,000	2033-2034
n/a	Estimated Capital Improvement Projects and Permit Requirements	☑	☑	☑	☑	☑	$ 24,200,000	2035-2044
						Total (2031-2044) CIP Cost Opinion	**$ 30,210,000**	
						Total 20-year (2025-2044) CIP Cost Opinion(3)	**$ 44,000,000**	

Notes:
1) Costs are in future dollars. Future Values utilize an inflation rate of 3.0 percent for years one through six and 2.4 percent for years seven through 20.
2) Project implementation schedule will be dependent on available funding.

Chapter SW 9 Recommendations

This Chapter contains the projected future needs for the Stormwater Management Utility over the next 20 years. The needs are based on the requirements of the National Pollutant Discharge Elimination System (NPDES) Phase II Permit and the system operation and infrastructure improvement goals established by the City. Recommendations for the Stormwater Management Utility include staffing increases, revisions and additions to city ordinances, capital improvement projects and other updates to the stormwater program.

SW 9.1 Future Program Recommendations

Chapter SW 7 discusses activities needed above the current City Stormwater program to meet the permit requirements in terms of full-time equivalent (FTE) staff. A summary of additional staffing needs and recommended actions for the Stormwater Management Utility are included in Sections SW 9.1.1 and SW 9.1.2, respectively.

SW 9.1.1 Staffing Recommendations

Based on the analyses provided in Sections SW 7.3 and SW 7.4, it is recommended that the City add 1.5 FTE to the Stormwater Management Utility to support operation and maintenance of additional infrastructure and implement NPDES Phase II Permit related requirements.

SW 9.1.2 Recommended Actions

Based on the evaluation completed in Section SW 7, there are several prioritized action items for the Stormwater Utility to address. The importance of the action items is prioritized as:

- Tier 1 – These items are essential to the ongoing mission of the Stormwater Management Utility. Noted items are needed for compliance with the NPDES Phase II Permit and have requirements that are to be addressed on a specific timeline.
- Tier 2 – These actions are highly valuable for the Stormwater Utility in pursuit of its mission. Actions include maintaining and improving existing programs and long-term planning.

Tier 1 Actions

- Complete planned drainage and environmental Capital Improvement Program (CIP) projects.
- Review and update Stormwater Management Utility rates to support capital and operating costs as well as debt service requirements.
- NPDES Requirement: Prepare Annual Reports for each calendar year and submit them by March 31 of the following year.
- NPDES Requirement: Complete Tree Canopy Mapping by December 31, 2026.
- NPDES Requirement: Prepare Stormwater Management Action Plan (SMAP) Update by March 31, 2027.
- NPDES Requirement: Implement the Stormwater Management for Existing Development (SMED) Program.

- NPDES Requirement: Develop and implement a Municipal Street Sweeping Program by July 1, 2027.
- NPDES Requirement: Implement a Municipal Operation and Maintenance plan by July 1, 2027.
- NPDES Requirement: Prepare Tree Canopy Goals and Policies to support stormwater management by December 31, 2028.
- NPDES Requirement: Maintain stormwater system map showing locations of all known municipal separate storm sewer system (MS4) outfalls and discharge points. By December 31, 2026, the required format for mapping is an electronic format with fully described mapping standards. By March 31, 2027, permittees shall submit locations of all known MS4 outfalls according to the standards provided in the Annual Report.
- NPDES Requirement: Continue to review and revise LID codes and policies.
- NPDES Requirement: Prepare to adopt the Washington State Department of Ecology 2024 Stormwater Management Manual for Western Washington by June 30, 2027.

Tier 2 Actions

- Prepare for 2029 NPDES Permit issuance.
- Prepare for the next Stormwater Comprehensive Plan Update in 2030.
- Evaluate project and program impacts from climate change.
- Review and update maintenance standards, as needed.
- Continue to train municipal staff to correctly identify and report spills.
- Continue to evaluate construction site runoff ordinances and pre-con site inspections.
- Review the Stormwater Management Utility's Emergency Preparation Plan.
- Maintain and update community-based social marketing strategies.

SW 9.2 Recommended Capital Improvements Program

CIP projects have been developed to resolve stormwater deficiencies identified by City staff. Stormwater deficiencies are located in areas that lack an effective or complete stormwater conveyance system; lack water quality treatment facilities; have limited access for operation, maintenance, and repairs; and/or are connected to combined sewer systems.

Utilities rely on prioritization of CIP projects to manage the cost, schedule, and resources available for implementation. The City identified approximately 30 projects to be evaluated for CIP projects. Twenty-four projects were selected for the 20-year CIP. Conceptual designs were developed for 16 CIPs as discussed in Chapter SW 8. Two problem areas were selected for hydrologic and hydraulic modeling, including SW-2 Beaton Ditch Improvements and SW-9 Beaton Road/Industrial Park Stormwater Improvements. The purpose of the modeling and evaluation was to provide a better understanding of the issues, evaluate options for improvements, and develop the CIP. Modeling analyses, results, and recommendations are presented in Chapter SW 8.

Opinion of Probable Project Costs (OPPC) were developed in 2024 dollars and include costs for planning and design, land or easement acquisition, construction management, and capital costs for construction. Detailed OPPCs are presented in Appendix SW-B.

The 6-year CIP (years 2025 to 2030) for the Stormwater Management Utility is shown on Table SW 8-5. Values shown are in future dollars that include an inflation rate of 3.0 percent for years one through six extrapolated from 2024-dollar valuations.

The CIP for years 2031 to 2044 is shown on Table SW 8-6, which completes the 20-year program for the Stormwater Management Utility. Future values presented include a 3.0 percent inflation for years one through six and a 2.4 percent inflation rate for years seven through 20. It is anticipated that the 24 projects described in this plan will be implemented during the first 10 years of the planning horizon. For years 10 through 20, an average CIP cost of approximately $1.67 million in 2024 dollars was assumed based on the average CIP OPPC for years one through 10.

The financial plan for the Stormwater Management Utility is presented in Chapter SW 10.

THIS PAGE INTENTIONALLY BLANK.

Chapter SW 10 Stormwater Financial Plan

SW 10.1 Introduction

This chapter was prepared by FCS GROUP to provide a financial program that allows the City stormwater utility to fund the utility's fixed costs, variable costs, and capital projects during the planning period. This financial viability analysis considers the historical financial condition, current and identified future financial and policy obligations, operation and maintenance (O&M) needs, and the financial impacts of the capital projects identified in this Stormwater System Plan (CWSP). Furthermore, this chapter provides a review of the stormwater utility's current rate structure with respect to rate adequacy and customer affordability.

The rate recommendations outlined in this chapter are intended to capture the current fiscal position of the utility, and to detail the future fiscal needs if no further financial analysis were to be completed. In 2026, the City intends to undergo a more thorough utility rate analysis including an evaluation of customer classes, the basis for rates and charges, as well as capital connection charges. The analysis will evaluate capital improvement plan expenditures to ensure they are achievable within proposed timeframes and plan for issuance of debt that is aligned with policy obligations.

The City approved Resolution 022-2019 adopting a 6-year rate model in November 2019. The final year of the adopted 6-year rate model is 2025, which includes a planned rate increase for stormwater of 10% and drinking water of 3%. The sewer utility has no planned increase.

In 2026, the City will consider an inflationary increase of 3.8% for stormwater, water, and sewer utilities. This increase is designed to bridge the gap between the end of the 6-year rate model in 2025, and the completion of the more detailed rate analysis in 2026 for implementation in 2027.

SW 10.2 Past Financial Performance

This section includes a historical summary of financial performance as reported by the City, including fund resources and uses arising from cash transactions.

SW 10.2.1 Comparative Financial Statements

The City legally owns and operates a stormwater utility. The City's utility operates on a cash basis. Therefore, annual balance sheets and income statements are not prepared. Table SW 10-1 shows a summary of stormwater fund resources and uses arising from cash transactions for the previous six years (2018 through 2023). Noteworthy findings and trends for the historical performance and condition of the City's stormwater utility are then discussed.

Table SW 10-1
Summary of Historical Fund Resources and Uses Arising From Cash Transactions

Description	2018	2019	2020	2021	2022	2023
Beginning Cash and Investments	$ 1,511,593	$ 1,305,785	$ 1,418,056	$ 1,224,661	$ 1,308,153	$ 1,579,746
Net Adjustments	-	-	-	-	-	-
Revenues						
Taxes	$ -	$ -	$ -	$ -	$ -	$ -
Licenses and Permits	-	-	-	-	-	-
Intergovernmental Revenues	-	50,000	214,994	171,791	103,781	2,252,963
Charges for Goods and Services	1,818,279	1,943,302	2,169,024	2,485,740	2,834,288	3,168,676
Fines and Penalties	-	-	-	-	-	-
Miscellaneous Revenues	27,221	23,895	26,440	8,136	16,141	52,125
Total Revenues	**$ 1,845,500**	**$ 2,017,197**	**$ 2,410,458**	**$ 2,665,667**	**$ 2,954,210**	**$ 5,473,764**
Expenditures						
General Government	$ -	$ -	$ -	$ -	$ -	$ -
Public Safety	17,518	20,395	14,340	22,842	18,682	9,157
Utilities	1,828,872	1,993,586	2,161,721	2,257,813	2,261,684	2,352,012
Transportation	-	-	-	-	-	-
Natural / Economic Environment	-	-	-	-	-	-
Social Services	-	-	-	-	-	-
Culture and Recreation	-	-	-	-	-	-
Total Expenditures	**$ 1,846,390**	**$ 2,013,981**	**$ 2,176,061**	**$ 2,280,655**	**$ 2,280,366**	**$ 2,361,169**
Excess (Deficiency) Revenues over Expenditures	**$ (890)**	**$ 3,216**	**$ 234,397**	**$ 385,012**	**$ 673,844**	**$ 3,112,595**
Other Increases in Fund Resources						
Debt Proceeds	$ -	$ -	$ 71,665	$ 40,597	$ 34,205	$ 726,492
Transfers-In	-	450,000	830	-	-	-
Special or Extraordinary Items	-	-	-	-	-	-
Custodial Activities	-	-	-	-	-	-
Other Resources	-	-	-	3,028	-	-
Total Other Increases in Fund Resources	**$ -**	**$ 450,000**	**$ 72,495**	**$ 43,625**	**$ 34,205**	**$ 726,492**
Other Decreases in Fund Resources						
Capital Expenditures	$ 73	$ 138,429	$ 283,171	$ 127,964	$ 219,380	$ 3,203,157
Debt Service	198,476	198,713	217,119	217,181	217,075	287,100
Transfers-Out	6,371	3,803	-	-	-	-
Special or Extraordinary Items	-	-	-	-	-	-
Custodial Activities	-	-	-	-	-	-
Other Uses	-	-	-	-	-	-
Total Other Decreases in Fund Resources	**$ 204,920**	**$ 340,945**	**$ 500,290**	**$ 345,145**	**$ 436,455**	**$ 3,490,257**
Increase (Decrease) in Cash and Investments	**$ (205,810)**	**$ 112,271**	**$ (193,398)**	**$ 83,492**	**$ 271,594**	**$ 348,830**
Ending Cash and Investments						
Nonspendable	$ -	$ -	$ -	$ -	$ -	$ -
Restricted / Reserved	255,632	249,232	254,777	256,291	160,106	164,625
Committed	-	-	-	-	-	-
Assigned / Unreserved	1,050,153	1,168,824	969,884	1,051,862	1,419,640	1,763,947
Unassigned	-	-	-	-	-	-
Total Ending Cash and Investments	**$ 1,305,785**	**$ 1,418,056**	**$ 1,224,661**	**$ 1,308,153**	**$ 1,579,746**	**$ 1,928,572**
O&M Coverage Ratio	99.95%	100.16%	110.77%	116.88%	129.55%	231.82%
Net Operating Income as a % of Operating Revenue	-0.05%	0.16%	9.72%	14.44%	22.81%	56.86%
Debt Service Coverage Ratio (net of 2023 Grant of $2.2M)	0.00	0.02	1.08	1.77	3.10	3.25

Findings and Trends

- The City's stormwater charges for services increased from $1.8 million (M) in 2018 to $3.2M in 2023. The average compounding annual increase was 11.7 percent per year, with a total increase of 74.3 percent from 2018 to 2023. Intergovernmental revenues increased from $50,000 in 2019 to $2.3M by 2023. The large increase in 2023 was associated with a Washington State Department of Ecology (Ecology) grant. Accounting for the 2023 grants shows Intergovernmental revenues average $123,000 between 2019 and 2023. Operating expenditures increased from $1.8M in 2018 to $2.4M in 2023. The average compounding annual increase was 5.0 percent per year, with a total increase of 27.9 percent. With a greater rate of increase in revenues, compared to total expenses, net income (revenues less expenditures) increased from a deficiency of $890 in 2018 to $3.1M in 2023 or $933,000 if the 2023 grant is not included.
- The O&M coverage ratio (total operating revenues divided by total operating expenses) was 99.95 percent in 2018. As revenues increased faster than expenditures, this ratio increased to 231.82 percent in 2023 with the Ecology grant and 139.5 percent without the Ecology grant. A ratio of 100 percent or greater shows that operating revenue will successfully cover operating expenses, and the utility has remained above this ratio for the majority of the last six years, with the exception of 2018.
- Net operating income as a percentage of operating revenue was -0.05 percent in 2018. This metric has increased through 2023 ending at 56.86 percent with the Ecology grant and at 17.1 percent without the Ecology grant. Similar to the O&M coverage ratio, these trends help to show how successfully operating revenue actually covered operating expenses, with higher positive numbers being the best and negative numbers showing the need for improvement. In addition, these trends demonstrate the ability of the utility to invest in capital, whether through direct cash transfers or the issuance and servicing of debt.
- The debt service coverage ratio measures the amount of cash flow available to meet principal and interest payments. Typically, revenue bond debt service coverage requires a minimum factor of 1.25 during the life of the loans. This ratio is calculated by dividing cash or net operating income (operating revenues less operating expenses) by annual revenue bond debt service. The City's annual reports did not separate the debt service between revenue bond debt and junior lien debt; therefore, the coverage ratios were calculated on total debt, which is a more conservative comparison. The total debt service coverage ratio for all outstanding debt ended 2018 at 0.00, increasing each year before ending 2023 at 3.3 without the Ecology grant. It should be noted that the long-term debt outstanding for the stormwater utility is cross pledged between multiple utilities and Funds, with coverage being assessed on a combined basis. Ideally, the stormwater utility will be able to meet coverage requirements on a standalone basis, however, overall coverage is the key metric which the City has met in all years. While the stormwater utility was not meeting coverage targets from 2018 – 2020 on a standalone basis, improvements were made to the ratio from 2021-2023 and results indicate a stable capacity for new debt.

SW 10.3 Financial Plan

The stormwater utility is responsible for generating sufficient revenue to meet all of its costs. The primary source of funding is derived from ongoing monthly service charges, with additional revenue coming from plan review and inspection activities and interest earnings. The City controls the level of user charges and, with City Council approval, can adjust user charges as needed to meet financial objectives.

The financial plan can only confirm financial feasibility if it considers the total system costs of providing stormwater services, both operating and capital. To meet these objectives, the following elements have been completed.

1. Capital Funding Plan**:** Identifies the total capital improvement plan (CIP) obligations of the planning period. The plan defines a strategy for funding the CIP, including an analysis of available resources from rate revenues, existing reserves, debt financing, and any special resources that may be readily available (e.g., grants, developer contributions, etc.). The capital funding plan impacts the financial plan through the use of debt financing (resulting in annual debt service) and the assumed rate revenue made available for capital funding.
2. Financial Forecast**:** Identifies future annual non-capital costs associated with the operation, maintenance, and administration of the stormwater system. Included in the financial plan is a reserve analysis that forecasts cash flow and fund balance activity, along with testing for satisfaction of actual or recommended minimum fund balance policies. The financial plan ultimately evaluates the sufficiency of utility revenues in meeting all obligations, including cash uses such as operating expenses, debt service, capital outlays, and reserve contributions, as well as any coverage requirements associated with long-term debt. The plan also identifies the future adjustments required to fully fund all utility obligations in the planning period.

SW 10.3.1 Capital Funding Plan

To properly evaluate future capital funding needs, capital costs were escalated by 4.0 percent in 2025 and 2026, 3.5 percent in 2027 and 2028 and 3.0 percent annually thereafter to the year of planned spending. The CIP developed for this CWSP identifies $13.8M in escalated project costs over the 6-year planning horizon from 2025-2030, in addition to the 2024 budget of $1.6M. The 20-year period, through 2044, along with the 2024 budget includes $48.1M in total escalated project costs.

A summary of the 6-year and 20-year CIPs are shown in Table SW 10-2. As shown, each year has varied capital cost obligations depending on construction schedules and infrastructure planning needs.

Table SW 10-2
Budget, 6-Year and 20-Year CIPs

Year	Unescalated $	Escalated $
2024	$ 1,638,864	$ 1,638,864
2025	216,717	225,385
2026	1,298,288	1,404,229
2027	1,965,000	2,199,731
2028	1,568,610	1,817,449
2029	3,465,000	4,135,118
2030	3,293,000	4,047,749
6-Year Total	**$ 13,445,479**	**$ 15,468,525**
2031 - 2044	20,878,778	32,630,123
20-Year Total	**$ 34,324,256**	**$ 48,098,647**

Table SW 10-3 provides more detail for the 6-year CIP.

Table SW 10-3
Budget and 6-Year CIP (Escalated $)

Project	2024	2025	2026	2027	2028	2029	2030	Total
Tjerne Retention Pond Fencing		$ 76,085						$ 76,085
Lake Tye Outfall Improvements		46,821	182,603					229,424
Downtown Porous Concrete		102,479	985,837	1,729,559				2,817,876
NPDES Required Capital Construction Facility Rehabilitation (SMAP)			32,448	190,308				222,756
Lake Tye South Inlet			203,341		792,508			995,848
Beaton Ditch				279,864	40,552	1,065,703		1,386,120
Stormwater Retrofits - Filter Replacements					113,094			113,094
Oil Water Separator Vault near Seventh-day Adventist Church					78,788			78,788
Beaton Road / Industrial Park					792,508	2,855,797	2,941,471	6,589,775
Park, Powell, Monroe, Roberts, & Kelsey Streets						213,618	919,440	1,133,058
154th and 170th Avenue Pond							186,838	186,838
								-
2024 Budget - Construction	1,330,628							1,330,628
2024 Budget - Capitalized Labor	308,236							308,236
Total	**$ 1,638,864**	**$ 225,385**	**$ 1,404,229**	**$ 2,199,731**	**$ 1,817,449**	**$ 4,135,118**	**$ 4,047,749**	**$15,468,525**

SW 10.4 Available Funding Assistance and Financing Resources

SW 10.4.1 City Resources

Resources appropriate for funding capital needs include accumulated cash in the capital fund, rate revenues designated for capital spending purposes, developer contributions, and capital-related charges such as system development charges. The first two resources will be discussed in the Fiscal Policies section of the Financial Forecast. Capital-related charges are discussed below.

System Development Charges (SDC)

A connection charge refers to a one-time charge imposed on new customers as a condition of connecting to the stormwater system. The purpose of the SDC is two-fold: 1) to promote equity between new and existing customers; and 2) to provide a source of revenue to fund capital projects necessary for meeting growth. This revenue can only be used to fund utility capital projects or to pay debt service incurred to finance those projects. In the absence of a connection charge, growth-related capital costs are borne in large part by existing customers. As of 2024, the City does not assess a stormwater SDC to new customers connecting to the system. In the future, the City may consider implementing an SDC to promote customer equity and help fund capacity enhancing infrastructure investments.

Local Facilities Charges

A utility local improvement district (ULID) is another mechanism for funding infrastructure that assesses benefited properties based on the special benefit received by the construction of specific facilities. Most often used for local facilities, some ULIDs also recover related general facilities costs. Substantial legal and procedural requirements can make this a relatively expensive process, and there are mechanisms by which a ULID can be rejected.

SW 10.4.2 Outside Resources

This section outlines various grant, loan, and bond opportunities available to the City through federal and state agencies to fund the CIP identified in the CWSP.

Grants and Low-Cost Loans

Historically, federal and state grant programs were available to local utilities for capital funding assistance. However, these assistance programs have been mostly eliminated, substantially reduced in scope and amount, or replaced by loan programs. Remaining grant programs are generally lightly funded and heavily subscribed. Nonetheless, the benefit of low-interest loans makes the effort of applying worthwhile.
The State of Washington's Department of Commerce maintains a document currently entitled "*Funding Programs for Drinking Water and Wastewater Projects; Updated 3-5-2024*", which contains details on government programs, eligibility requirements, and contact information, should the City wish to inquire about program offerings and eligibility requirements.

Bond Financing

General Obligation Bonds

General obligation (G.O.) bonds are bonds secured by the full faith and credit of the issuing agency, committing all available tax and revenue resources to debt repayment. With this high level of commitment, G.O. bonds have relatively low interest rates and few financial restrictions. However, the authority to issue

G.O. bonds is restricted in terms of the amount and use of the funds, as defined by the Washington constitution and statute. Specifically, the amount of debt that can be issued is linked to assessed valuation.

Revised Code of Washington (RCW) 39.36.020 states:

> (2)(a)(ii) Counties, cities, and towns are limited to an indebtedness amount not exceeding one and one half percent of the value of the taxable property in such counties, cities, or towns without the assent of three-fifths of the voters therein voting at an election held for that purpose.
>
> (b) In cases requiring such assent counties, cities, towns, and public hospital districts are limited to a total indebtedness of two and one-half percent of the value of the taxable property therein.

While bonding capacity can limit the availability of G.O. bonds for utility purposes, these can sometimes play a valuable role in project financing. A utility rate savings may be realized through two avenues: the lower interest rate and related bond costs, and the extension of repayment obligation to all tax-paying properties (not just developed properties) through the authorization of an ad valorem property tax levy.

Revenue Bonds

Revenue bonds are commonly used to fund utility capital improvements. The debt is secured by the revenues of the issuing utility. With this limited commitment, revenue bonds typically bear higher interest rates than G.O. bonds and require security conditions related to the maintenance of dedicated reserves (a bond reserve) and financial performance (added bond debt service coverage). The City agrees to satisfy these requirements by resolution as a condition of bond sale.

Revenue bonds can be issued in Washington without a public vote. There is no bonding limit, except perhaps the practical limit of the utility's ability to generate sufficient revenue to repay the debt and provide coverage. In some cases, poor credit might make issuing revenue bonds problematic.

SW 10.4.3 Capital Funding Strategy

An ideal capital financing strategy would include the use of grants and low-cost loans when debt issuance is required. However, these resources are very limited and competitive in nature and do not provide a reliable source of funding for planning purposes. It is recommended that the City pursue these funding avenues but assume revenue bond financing to meet the needs which cannot be met by available cash resources. The capital financing strategy developed to fund the CIP identified in this CWSP assumes the following funding resources:

- Accumulated cash reserves,
- Transfers of excess cash (over minimum balance targets) from the Operating Fund,
- Grant proceeds,
- Interest earned on Capital Fund balances,
- Revenue bond financing.

The cash resources described above are anticipated to fund 47.6 percent of the 2024 budget and 6-year CIP and 52.0 percent of the 20-year CIP. The remaining funding is assumed to be from new debt obligations of $8.1M in the next 6-year planning period and an additional $15.0M between 2031-2044. Table SW 10-4 presents the 6-year and 20-year capital financing strategy.

Table SW 10-4
Budget, 6-Year and 20-Year Capital Financing Strategy

Year	CIP (Escalated)	Funding Sources			Total Financial Resources
		Grants	New Debt	Cash Funding	
2024	$ 1,638,864	$ 213,283		$ 1,425,581	$ 1,638,864
2025	225,385			225,385	225,385
2026	1,404,229			1,404,229	1,404,229
2027	2,199,731		2,000,000	199,731	2,199,731
2028	1,817,449			1,817,449	1,817,449
2029	4,135,118		4,135,118	-	4,135,118
2030	4,047,749		1,964,882	2,082,866	4,047,749
6-Year Total	**$ 15,468,525**	**$ 213,283**	**$ 8,100,000**	**$ 7,155,242**	**$ 15,468,525**
2031 - 2044	32,630,123	-	15,000,000	17,630,123	32,630,123
20-Year Total	**$ 48,098,647**	**$ 213,283**	**$ 23,100,000**	**$ 24,785,364**	**$ 48,098,647**

SW 10.5 Financial Forecast

The financial forecast, or revenue requirement analysis, forecasts the amount of annual revenue that needs to be generated by user rates. The analysis incorporates operating revenues, O&M expenses, debt service payments, rate-funded capital needs, and any other identified revenues or expenses related to operations. The objective of the financial forecast is to evaluate the sufficiency of the current level of rates. In addition to annual operating costs, the revenue needs also include debt covenant requirements and specific fiscal policies and financial goals of the City.

For this analysis, two revenue sufficiency tests have been developed to reflect the financial goals and constraints of the City: cash needs must be met; and debt coverage requirements must be realized. In order to operate successfully with respect to these goals, both tests of revenue sufficiency must be met.

1. Cash Test: The cash flow test identifies all known cash requirements for the City in each year of the planning period. Typically, these include O&M expenses, debt service payments, rate-funded system reinvestment or directly funded capital outlays, and any additions to specified reserve balances. The total annual cash needs of the City are then compared to projected cash revenues using the current rate structure. Any projected revenue shortfalls are identified, and the rate increases necessary to make up the shortfalls are established.
2. Coverage Test: The coverage test is based on a commitment made by the City when issuing revenue bonds and some other forms of long-term debt. For the purposes of this analysis, revenue bond debt is assumed for any needed debt issuance. As a security condition of issuance, the City would be required per covenant to agree that the revenue bond debt would have a higher priority for payment (a senior lien) compared to most other expenditures; the only outlays with a higher lien are O&M expenses. Debt service coverage is expressed as a multiplier of the annual revenue bond debt service payment. For example, a 1.00 coverage factor would imply that no additional cushion is required. A 1.25 coverage factor means revenue must be sufficient to pay O&M expenses, annual revenue bond debt service payments, and an additional 25.0 percent of annual revenue bond debt service payments. The excess cash flow derived from the added coverage, if any, can be used for any purpose, including funding capital projects. Targeting a higher coverage factor can help the City achieve a better credit rating and provide lower interest rates for future debt issues.

SW 10.5.1 Current Financial Structure

The City maintains a fund structure and implements financial policies that target management of a financially viable and fiscally responsible stormwater system.

Fiscal Policies

A summary of the key financial policies employed by the City, as well as those recommended and incorporated in the financial program, are discussed below.

Operating Reserve

Operating reserves are designed to provide a liquidity cushion to ensure that adequate cash working capital will be maintained to deal with significant cash balance fluctuations, such as seasonal fluctuations in billings and receipts, unanticipated cash expenses, or lower than expected revenue collections. Like other types of reserves, operating reserves also serve another purpose: they help smooth rate increases over time. Target funding levels for an operating reserve are generally expressed as a certain number of days of O&M expenses, with the minimum requirement varying with the expected revenue volatility. Industry practice for utility operating reserves ranges from 30 days (8.0 percent) to 120 days (33.0 percent) of O&M expenses, with the lower end more appropriate for utilities with stable revenue streams and the higher end more appropriate for utilities with significant seasonal or consumption-based fluctuations. The City's current goal is to maintain a minimum balance in the Operating Fund equal to 45 days of O&M expenses and annual debt service for working capital.

Capital Reserve

A capital contingency reserve is an amount of cash set aside in case of an emergency should a piece of equipment or a portion of the utility's infrastructure fail unexpectedly. The reserve also could be used for other unanticipated capital needs, including capital project cost overruns. Industry practices range from maintaining a balance equal to 1.0 to 2.0 percent of fixed assets, an amount equal to a 5-year rolling average of CIP costs, or an amount determined sufficient to fund equipment failure (other than catastrophic failure). The final target level should balance industry practices with the risk level of the City.

This financial plan targets a minimum balance in the stormwater utility capital fund equal to 1.0 percent of fixed assets.

System Reinvestment

System reinvestment funding promotes system integrity through ongoing repair and replacement of system infrastructure. Ideally, a detailed asset management plan would guide the level of rate funded system reinvestment, however, in absence of this level of effort, annual depreciation expense is commonly used as a measure of the decline in asset value associated with routine use of the system. Particularly for utilities that do not already have an explicit system reinvestment policy in place, implementing a funding level based on full depreciation expense could significantly impact rates. An alternative benchmark is annual depreciation expense net of debt principal payments on outstanding debt. This approach recognizes that customers are still paying for certain assets through the debt component of their rate and intends to avoid simultaneously charging customers for an asset and its future replacement. The specific benchmark used to set system reinvestment funding targets is a matter of policy that must balance various objectives, including managing rate impacts, keeping long-term costs down, and promoting "generational equity" (i.e., not excessively burdening current customers with paying for facilities that will serve a larger group of customers in the future).

The City does not currently have a policy in place for system reinvestment funding. No dedicated system reinvestment funding is assumed in this financial plan; however, current practice is to transfer cash above the minimum operating target balance to the capital fund as cash-funded capital. On average, the study assumed an annual transfer of approximately $864,000 per year within the budget and 6-year planning period.

Debt Management

It is prudent to consider policies related to debt management as part of a broader utility financial policy structure. Debt management policies should be evaluated and formalized, including the level of acceptable outstanding debt, debt repayment, bond coverage, and total debt coverage targets. The City has two outstanding stormwater revenue bonds, a municipal bond and a loan from Ecology. The revenue bonds carry a coverage requirement of 1.25.

Because the City intends to continue using revenue bonds as a significant source of capital funding, this financial plan targets coverage at 1.5. Targeting a higher than required coverage factor helps the City maintain its credit rating and may provide lower interest rates for future debt issues.

Financial Forecast

The financial forecast is primarily based upon the City's budget through 2024 and takes into consideration other key factors and assumptions needed to develop a complete portrait of the City's annual stormwater utility financial obligations. The following is a list of the key revenue and expense factors and assumptions used to develop the financial forecast.

- Growth – Rate revenue is escalated utilizing a 1.26 percent growth rate developed based on actual historical trends at the City.
- Revenue – The City has two general revenue sources: 1) stormwater service charges (rate revenue); and 2) miscellaneous (non-rate) revenue. In the event of a forecasted annual shortfall, rate revenue can be increased to meet the annual revenue requirement. For the purpose of this financial forecast, rate revenues are forecasted to increase with customer growth. Non-rate revenues are escalated using general cost inflation assumptions, with the exception of interest earnings which are calculated based on projected balances and assumed investment rates.
- Expenses – O&M expense projections are based on the City's budget through 2024 and a detailed review of line-item expenses with City staff and were forecasted into the future based on the following assumptions:
    - General Cost Inflation: 4.0 percent in 2025 and 2026 followed by 3.0 percent per year thereafter.
    - Labor Cost Inflation: 3.0 percent in 2025 and 2026 followed by 5.0 percent per year thereafter.
    - Benefit Cost Inflation: 10.0 percent per year.
    - Liability Insurance Inflation: 15.0 percent per year 2025 through 2029, followed by 10.0 percent per year thereafter.
    - Taxes: taxes were calculated based on forecasted revenues and prevailing tax rates.

- Existing Debt – The stormwater utility has four (4) outstanding debt issues: two (2) revenue bonds, one (1) Limited Tax General Obligation (LTGO) bond and one (1) Department of Ecology (Ecology) loan. Total annual existing debt service obligations begin 2024 at $400,000 and stay relatively steady, increasing to $407,000 by 2030.
- Future Debt – The capital financial strategy developed for this CWSP forecasts the need for $8.1M in new debt proceeds in two (2) separate instances throughout the six-year forecast. The analysis performed assumes all new debt is through revenue bond financing. Annual new debt service obligations are forecasted to begin in 2027 at $176,000 increasing to $714,000 by 2030.
- Transfers to Capital – As discussed in the system reinvestment section above, operating fund balance above the minimum requirement is assumed to be available to fund capital projects and projected to be transferred to the Capital Fund each year, if needed. In total, the utility is forecast to fund $6.0 million in capital projects from excess operating fund cash within the 6-year forecast period.

Although the financial plan is completed through 2044, the rate strategy focuses on the shorter-term planning period of 2025 through 2030. It is recommended that the City revisit the proposed rates every 3 to 4 years and consider ordinances setting rates for that same period to ensure that the rate projections developed remain adequate and that rate revenues are consistent year over year. Any proposed significant changes should be incorporated into the financial plan and future rates should be adjusted as needed.

Table SW 10-5, following, summarizes the annual revenue requirements based on the forecast of revenues, expenditures, fund balances, and fiscal policies.

The financial forecast indicates that at existing rate levels, revenues are sufficient to cover operating expenses in 2025 and generate a surplus of $796,000 which can be used to partially offset the annual capital program. As expenses outpace growth and the utility takes on additional debt obligations to fund capital infrastructure investments, rates become deficient in 2029 by $315,000, with the deficiency increasing to $411,000 by 2030. In order to resolve the projected deficiency, rates will need to increase by 4.75 percent annually from 2025 through 2030.

Table SW 10-5
Budget and 6-Year Financial Forecast

Description	2024	2025	2026	2027	2028	2029	2030
Revenues							
Rate Revenues Under Existing Rates	$ 3,376,738	$ 3,419,285	$ 3,462,368	$ 3,505,994	$ 3,550,169	$ 3,594,901	$ 3,640,197
Non-Rate Revenues	30,365	32,441	25,978	26,709	31,457	32,278	45,227
Total Revenues	**$ 3,407,103**	**$ 3,451,726**	**$ 3,488,346**	**$ 3,532,703**	**$ 3,581,626**	**$ 3,627,180**	**$ 3,685,424**
Expenses							
Cash Operating Expenses	$ 2,211,194	$ 2,294,443	$ 2,406,805	$ 2,535,572	$ 2,673,430	$ 2,821,027	$ 2,975,661
Existing Debt Service	399,495	407,149	407,105	406,770	406,536	406,849	406,767
New Debt Service	-	-	-	176,404	176,404	714,438	714,438
Total Expenses	**$ 2,610,689**	**$ 2,701,592**	**$ 2,813,910**	**$ 3,118,747**	**$ 3,256,370**	**$ 3,942,314**	**$ 4,096,865**
Total Surplus (Deficiency)	**$ 796,414**	**$ 750,135**	**$ 674,436**	**$ 413,956**	**$ 325,256**	**$ (315,134)**	**$ (411,442)**
Annual Rate Adjustment	**0.00%**	**4.75%**	**4.75%**	**4.75%**	**4.75%**	**4.75%**	**4.75%**
Cumulative Annual Rate Adjustment	**0.00%**	**4.75%**	**9.73%**	**14.94%**	**20.40%**	**26.12%**	**32.11%**
Rate Revenues After Rate Increase	$ 3,376,738	$ 3,581,701	$ 3,799,105	$ 4,029,705	$ 4,274,302	$ 4,533,746	$ 4,808,937
Additional Taxes from Rate Increase	-	2,842	5,893	9,165	12,672	16,430	20,453
Net Cash Flow After Rate Increase	**$ 796,414**	**$ 909,709**	**$ 1,005,280**	**$ 928,502**	**$ 1,036,716**	**$ 607,280**	**$ 736,845**
Coverage After Rate Increases	5.8	7.1	7.7	4.2	4.6	1.9	2.1

City Funds and Reserves

Table SW 10-6 shows a summary of the projected Operating Fund and Capital Fund ending balances through 2030 based on the rate forecasts presented above. The Operating Fund is maintained above 45 days of O&M expenses and annual debt service. The Capital Fund balance meets or exceeds the minimum target of 1.0 percent of fixed assets in every year of the forecast period.

Table SW 10-6
Ending Cash Balance Summary

Project	2024	2025	2026	2027	2028	2029	2030
Operating Fund	$ 685,365	$ 333,073	$ 346,920	$ 384,503	$ 401,470	$ 486,039	$ 505,093
Capital Fund	454,205	1,499,904	1,117,106	1,830,636	1,069,549	3,578,534	320,147
Total	**$ 1,139,570**	**$ 1,832,977**	**$ 1,464,027**	**$ 2,215,139**	**$ 1,471,019**	**$ 4,064,572**	**$ 825,240**

SW 10.6 Current and Projected Rates

SW 10.6.1 Current Rates

The City's existing stormwater rate is a monthly flat rate that is charged to each customer per Equivalent Residential Unit (ERU). Each single family customer is considered one ERU. All non-single family customers are charged based on the total amount of impervious surface area on site. The average single family residential lot has 2,500 square feet of impervious surface area, so the total impervious surface area for a non-residential lot is divided by 2,500 to calculate the number of ERUs for that site. The City offers a discounted rate for *Senior Citizen or Disabled* as well as *Low-Income Senior Citizen – Nonprofit Multifamily* customers. Table SW 10-7 shows the existing City stormwater system rate schedule.

Table SW 10-7
Existing Schedule of Rates

Stormwater Rates	2024
Monthly per ERU	$ 21.14

Note:
1. Low income senior citizen discount: 40% off applicable monthly fees.
2. Low income disabled persons discount: 40% off applicable monthly fees.

SW 10.6.2 Projected Rates

The financial forecast indicates that rate increases are needed to satisfy all future financial responsibilities for the stormwater utility. A rate strategy of 4.75 percent annual increases for the study period is recommended to satisfy this forecast deficiency. Table SW 10-8 shows the projected rates with increases applied annually. A more detailed rate study that will analyze the projected increases is planned to be conducted in 2026.

Table SW 10-8
Projected Schedule of Rates

Stormwater Rates	Existing 2024	Projected 2025	2026	2027	2028	2029	2030
Monthly per ERU	$ 21.14	$ 22.14	$ 23.19	$ 24.29	$ 25.44	$ 26.65	$ 27.92

Note:

1. Low income senior citizen discount: 40% off applicable monthly fees.
2. Low income disabled persons discount: 40% off applicable monthly fees.

SW 10.7 Affordability

The Washington State Department of Health and the Department of Commerce Public Works Board use an affordability index to prioritize low-cost loan awards depending on whether rates exceed 2.5 percent of the median household income for the service area. The average median household income for the City was $75,149 between 2018 and 2022, expressed in 2022 dollars, according to the U.S. Census Bureau. The 2022 value is escalated based on the actual rate of inflation in 2023 of 4.31 percent and the 4.0 – 3.0 percent inflation rate used in the financial forecast to project the median household income in future years. Table SW 10-9 presents the City's monthly stormwater bill, projected to 2030 and tested against the 2.5 precent monthly affordability threshold.

Table SW 10-9
Community Affordability Test

Year	Inflation	Median HH Income	2.5% Monthly Threshold	Projected Monthly Bill	% of Median HH Income
2022		$ 75,149			
2023	4.31%	78,388			
2024	4.00%	81,523	$ 169.84	$ 21.14	0.31%
2025	4.00%	84,784	176.63	22.14	0.31%
2026	4.00%	88,176	183.70	23.19	0.32%
2027	3.00%	90,821	189.21	24.29	0.32%
2028	3.00%	93,546	194.89	25.44	0.33%
2029	3.00%	96,352	200.73	26.65	0.33%
2030	3.00%	99,243	206.76	27.92	0.34%

Applying the 2.5 percent monthly affordability test, the City's rates are forecasted to remain within the indicated affordability range through 2030.

SW 10.8 Conclusion

The results of this analysis indicate that at existing rate levels the utility will be deficient beginning in 2029. To keep pace with expenses and prepare for new debt obligations needed to fund system infrastructure, an annual increase of 4.75 percent is projected.

It is recommended that the City regularly review and update the key underlying assumptions that compose the multi-year financial plan to ensure that adequate revenues are collected to meet the City's total financial obligations. The City has not conducted a detailed rate analysis since 2015. A more detailed rate study that will analyze and evaluate the City's rates, capital, operating, cash and debt service needs is planned to be conducted in 2026.

APPENDICES

THIS PAGE INTENTIONALLY BLANK

Appendix SW-A

Capital Improvement Project Sheets

THIS PAGE INTENTIONALLY BLANK

Bubble #	Bubble Description	Quantity	
1	Proposed Bioretention Media Filter Cell with Tree Feature	5	EA
2	Proposed Channel Excavation	600	CY

SW - 1

LAKE TYE

Fryelands Blvd

150th St SE

152nd St SE

153rd St SE

154th St SE

165th Ave SE

166th Ave SE

167th Ave SE

168th Dr SE

169th Dr SE

Heintz Ave SE

Ladd St SE

Jake Dr SE

Wales St SE

Marmount St SE

Van Ave SE

Sawyer St SE

Sykes Dr SE

SW

30

40

Legend

- Proposed Water Quality Unit
- Proposed Channel Excavation
- Project Area
- Storm Drain Outfall
- Bioswale
- Filtration System
- City Owned MH
- Privately Owned MH
- City Owned Main
- Privately Owned Main
- Channel/Ditch/Bioswale
- 10ft Contour
- City of Monroe
- UGA Boundary

P:\Mapping\Maps_Generated\Monroe\projects\22-10808.00 - MIG - Monroe Comprehensive Plan\004 - Stormwater System Plan\mxds\DataDriven SW X-X Recommended Improvements 11x17 RJS.mxd 6/10/2024 rjones

Stormwater System: City of Monroe 204

Snohomish County base data 2024

Service Layer Credits: Source: Esri, Maxar, Earthstar Geographics, and the GIS User Community

Data sources supplied may not reflect current or actual conditions. This map is a geographic representation based on information available. It does not represent survey data. No warranty is made concerning the accuracy, currency, or completeness of data depicted on this map. BHC Consultants LLC., assumes no responsibility for the validity of any information presented herein, nor any responsibility for the use or misuse of the data.

N

0 250 500 Feet

Lake Tye South Inlet

Capital Improvement Project SW - 1

Utility Systems Plan - Stormwater
City of Monroe, Washington
September 2024

COPYRIGHT © 2024 BHC CONSULTANTS LLC., ALL RIGHTS RESERVED

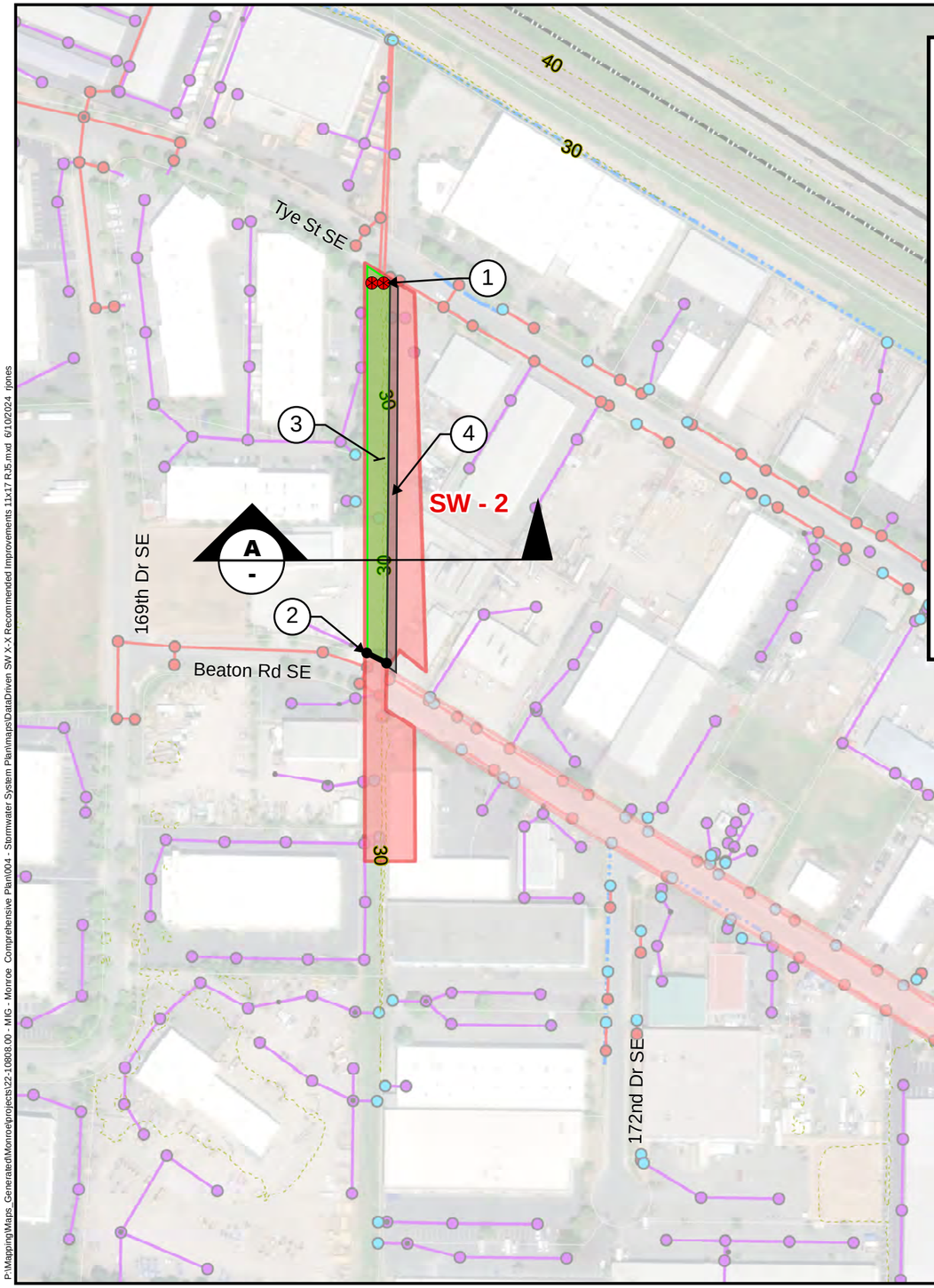

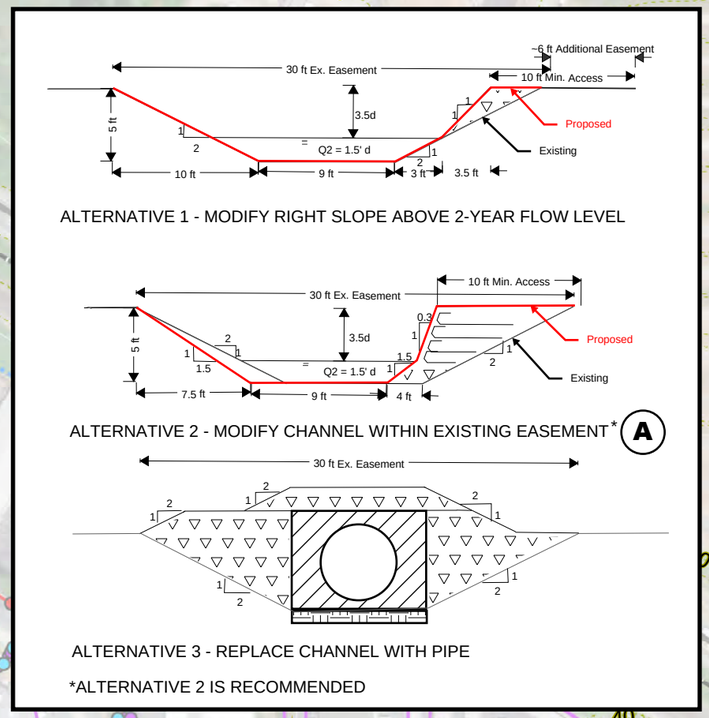

Bubble #	Bubble Description	Quantity	
1	Proposed Bird Cage Overflow	2	EA
2	Proposed Slide Gate	1	EA
3	Proposed Channel Excavation	1,036	CY
4	Proposed Gravel Access Road	6,600	SF

Legend

- Proposed Bird Cage Overflow
- Proposed Slide Gate
- Proposed Channel Excavation
- Proposed Gravel Access Road
- Storm Drain Outfall
- City Owned MH
- Privately Owned MH
- City Owned Main
- Privately Owned Main
- Channel/Ditch/Bioswale
- 50ft Contour
- 10ft Contour
- City of Monroe
- UGA Boundary

P:\Mapping\Maps_Generated\Monroe\projects\22-10808.00 - MIG - Monroe Comprehensive Plan\004 - Stormwater System Plan\maps\DataDriven SW X-X Recommended Improvements 11x17 RJS.mxd 6/10/2024 rjones

Stormwater System: City of Monroe 204

Snohomish County base data 2024

Service Layer Credits: Source: Esri, Maxar, Earthstar Geographics, and the GIS User Community

Data sources supplied may not reflect current or actual conditions. This map is a geographic representation based on information available. It does not represent survey data. No warranty is made concerning the accuracy, currency, or completeness of data depicted on this map. BHC Consultants LLC., assumes no responsibility for the validity of any information presented herein, nor any responsibility for the use or misuse of the data.

N

0 225 450 Feet

Beaton Ditch

Capital Improvement Project SW - 2

Utility Systems Plan - Stormwater
City of Monroe, Washington
September 2024

COPYRIGHT © 2024 BHC CONSULTANTS LLC., ALL RIGHTS RESERVED

Bubble #	Bubble Description	Quantity	
1	Proposed Storm Line (12")	170	LF
2	Proposed Storm Structure	1	EA
3	Proposed Storm Inlet	2	EA
4	Proposed Bird Cage Overflow	3	EA
5	Proposed Access Path	1	EA
6	Proposed Tree/Vegetation Removal	1	EA
7	Proposed Rock Check Dam	8	EA

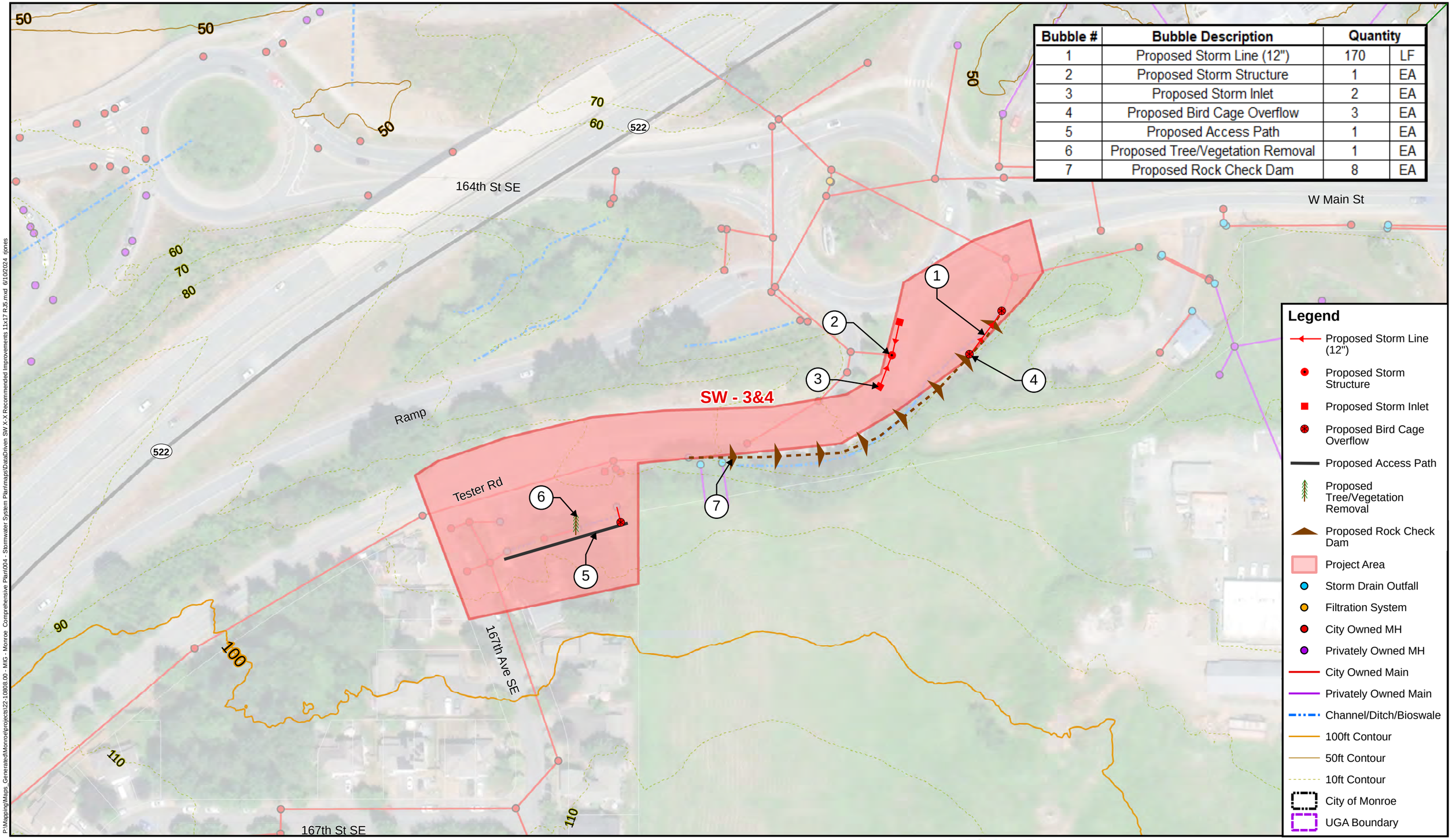

P:\Mapping\Maps_Generated\Monroe\projects\22-10808.00 - MIG - Monroe Comprehensive Plan\004 - Stormwater System Plan\maps\DataDriven SW X-X Recommended Improvements 11x17 RJS.mxd 6/10/2024 rjones

Stormwater System: City of Monroe 204

Snohomish County base data 2024

Service Layer Credits: Source: Esri, Maxar, Earthstar Geographics, and the GIS User Community

Data sources supplied may not reflect current or actual conditions. This map is a geographic representation based on information available. It does not represent survey data. No warranty is made concerning the accuracy, currency, or completeness of data depicted on this map. BHC Consultants LLC., assumes no responsibility for the validity of any information presented herein, nor any responsibility for the use or misuse of the data.

N

0 100 200 Feet

Arbor Heights Ditch and Tester Road

Capital Improvement Project SW - 3&4

Utility Systems Plan - Stormwater
City of Monroe, Washington
September 2024

COPYRIGHT © 2024 BHC CONSULTANTS LLC., ALL RIGHTS RESERVED

Bubble #	Bubble Description	Quantity	
1	Proposed Storm Line (12")	1,710	LF
2	Proposed Storm Structure	16	EA
3	Proposed Storm Inlet	23	EA
4	Proposed Concrete Pavement	2,080	SF
5	Proposed HMA Paving	90	TN

SW - 6

SW - 5

SW - 10

1 2 3 4 5

Grant Ln
Orr St
Polk Ln
Taylor Ln
Arthur Ln
W Hill St
N Madison St
N Blakeley St
N Lewis St
E Hill St
N Ferry St
N Woods St
E Main St
Railroad Ave
Mill St
Simons Rd
Woods St
Charles St
S Ann St
Short Columbia St
N Sams St
W Main St
W Fremont St
E Fremont St
S Sams St
S Madison St
S Blakely St
S Lewis St
S Ferry St
Morris St
W McDougall St
E McDougall St
S Taft Ln
Thompson Ln

203
70
60
50

Legend

- Proposed Storm Drain
- Proposed Storm Structure
- Proposed Storm Inlet
- Proposed Concrete Pavement
- Proposed HMA Paving
- Filtration System
- City Owned MH
- Privately Owned MH
- City Owned Main
- Privately Owned Main
- Channel/Ditch/Bioswale
- 50ft Contour
- 10ft Contour
- City of Monroe
- UGA Boundary

P:\Mapping\Maps_Generated\Monroe\projects\22-10808.00 - MIG - Monroe Comprehensive Plan\004 - Stormwater System Plan\maps\DataDriven SW X-X Recommended Improvements 11x17 RJS.mxd 6/10/2024 rjones

bhc CONSULTANTS

Stormwater System: City of Monroe 204

Snohomish County base data 2024

Service Layer Credits: Source: Esri, Maxar, Earthstar Geographics, and the GIS User Community

Data sources supplied may not reflect current or actual conditions. This map is a geographic representation based on information available. It does not represent survey data. No warranty is made concerning the accuracy, currency, or completeness of data depicted on this map. BHC Consultants LLC., assumes no responsibility for the validity of any information presented herein, nor any responsibility for the use or misuse of the data.

N

0 200 400 Feet

MONROE WASHINGTON

Downtown Porous Concrete

Capital Improvement Project SW - 5

Utility Systems Plan - Stormwater
City of Monroe, Washington
September 2024

COPYRIGHT © 2024 BHC CONSULTANTS LLC., ALL RIGHTS RESERVED

Bubble #	Bubble Description	Quantity	
1	Proposed Storm Line (12")	20	LF
2	Proposed Storm Structure	2	EA
3	Proposed Storm Inlet	1	EA
4	Proposed Pretreatment Structure	1	EA
5	Proposed Underdrain (18")	50	LF
6	Proposed HMA Paving	1,170	SF
7	Proposed HMA Speed Bump	20	LF

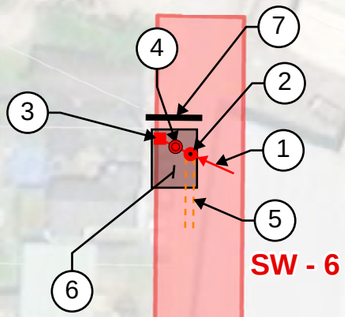

N Blakeley St

N Lewis St

203

SW - 5

W Hill St

E Hill St

Legend

- Proposed Storm Line (12")
- Proposed Storm Structure
- Proposed Storm Inlet
- Proposed Pretreatment Structure
- Proposed Underdrain (18")
- Proposed HMA Paving
- Proposed HMA Speed Bump
- Project Area
- City Owned MH
- Privately Owned MH
- City Owned Main
- Privately Owned Main
- 10ft Contour
- City of Monroe
- UGA Boundary

P:\Mapping\Maps_Generated\Monroe\projects\22-10808.00 - MIG - Monroe Comprehensive Plan\004 - Stormwater System Plan\maps\DataDriven SW X-X Recommended Improvements 11x17 RJS.mxd 6/10/2024 rjones

Stormwater System: City of Monroe 204

Snohomish County base data 2024

Service Layer Credits: Source: Esri, Maxar, Earthstar Geographics, and the GIS User Community

Data sources supplied may not reflect current or actual conditions. This map is a geographic representation based on information available. It does not represent survey data. No warranty is made concerning the accuracy, currency, or completeness of data depicted on this map. BHC Consultants LLC., assumes no responsibility for the validity of any information presented herein, nor any responsibility for the use or misuse of the data.

N

0 50 100 Feet

Tyler Lane Storm Basin

Capital Improvement Project SW - 6

Utility Systems Plan - Stormwater
City of Monroe, Washington
September 2024

COPYRIGHT © 2024 BHC CONSULTANTS LLC., ALL RIGHTS RESERVED

Bubble #	Bubble Description	Quantity	
1	Proposed Storm Line (12")	230	LF
2	Proposed Storm Structure	2	EA
3	Proposed Pretreatment Structure	2	EA
4	Proposed Underdrain (18")	50	LF

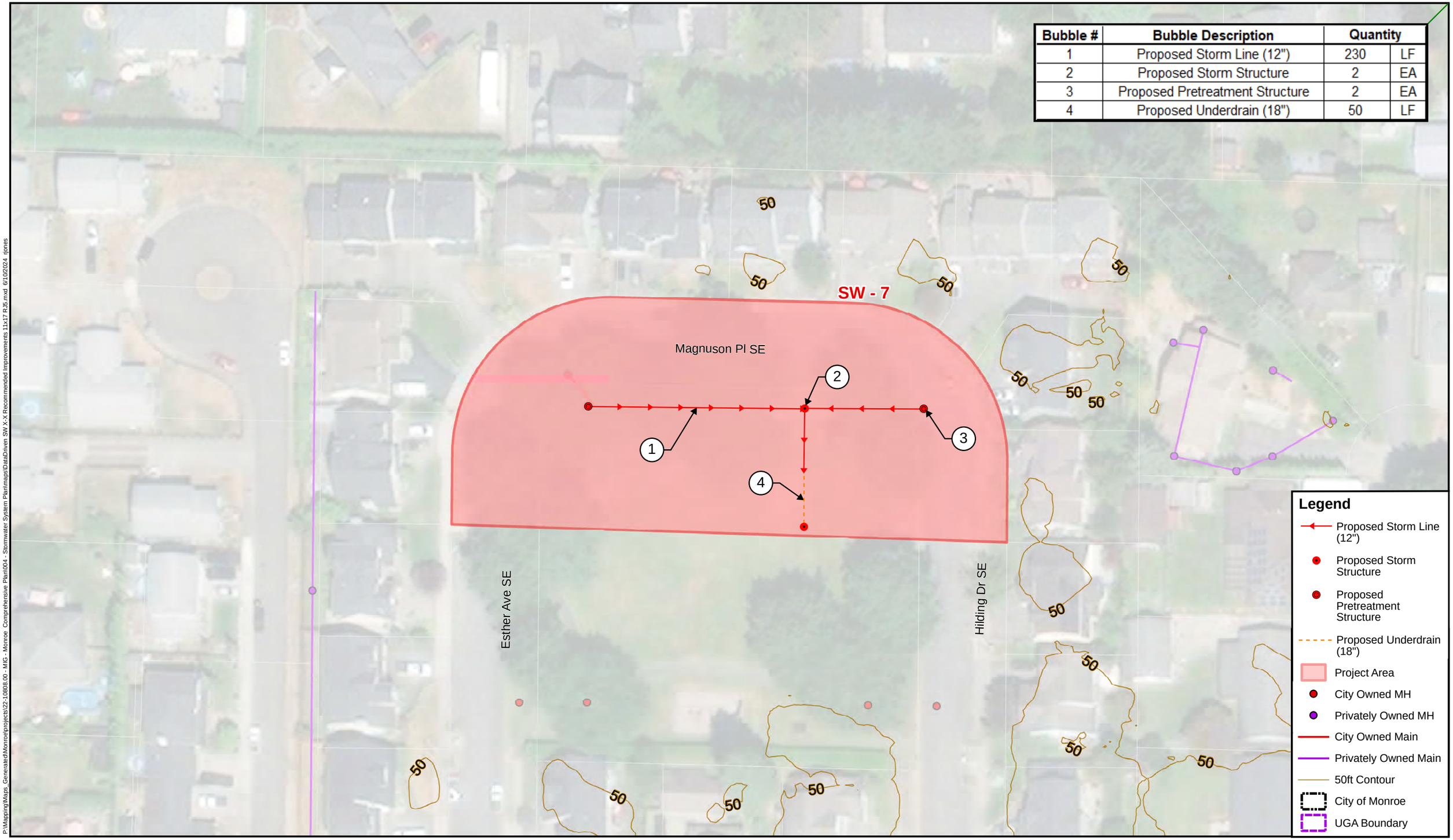

P:\Mapping\Maps_Generated\Monroe\projects\22-10808.00 - MIG - Monroe Comprehensive Plan\004 - Stormwater System Plan\maps\DataDriven SW X-X Recommended Improvements 11x17 RJS.mxd 6/10/2024 rjones

Stormwater System: City of Monroe 204

Snohomish County base data 2024

Service Layer Credits: Source: Esri, Maxar, Earthstar Geographics, and the GIS User Community

Data sources supplied may not reflect current or actual conditions. This map is a geographic representation based on information available. It does not represent survey data. No warranty is made concerning the accuracy, currency, or completeness of data depicted on this map. BHC Consultants LLC., assumes no responsibility for the validity of any information presented herein, nor any responsibility for the use or misuse of the data.

N

0 50 100 Feet

Magnuson Park

Capital Improvement Project SW - 7

Utility Systems Plan - Stormwater
City of Monroe, Washington
September 2024

COPYRIGHT © 2024 BHC CONSULTANTS LLC., ALL RIGHTS RESERVED

Bubble #	Bubble Description	Quantity	
1	Proposed Brid Cage Overflow	2	EA
2	Proposed Pretreatment Structure	2	EA
3	Proposed Grading Excavation	509	CY
4	Proposed Rip Rap	153	CY
5	Proposed Outfall Access Improvements	1	EA
6	Proposed Tree/Vegetation Removal	5	EA

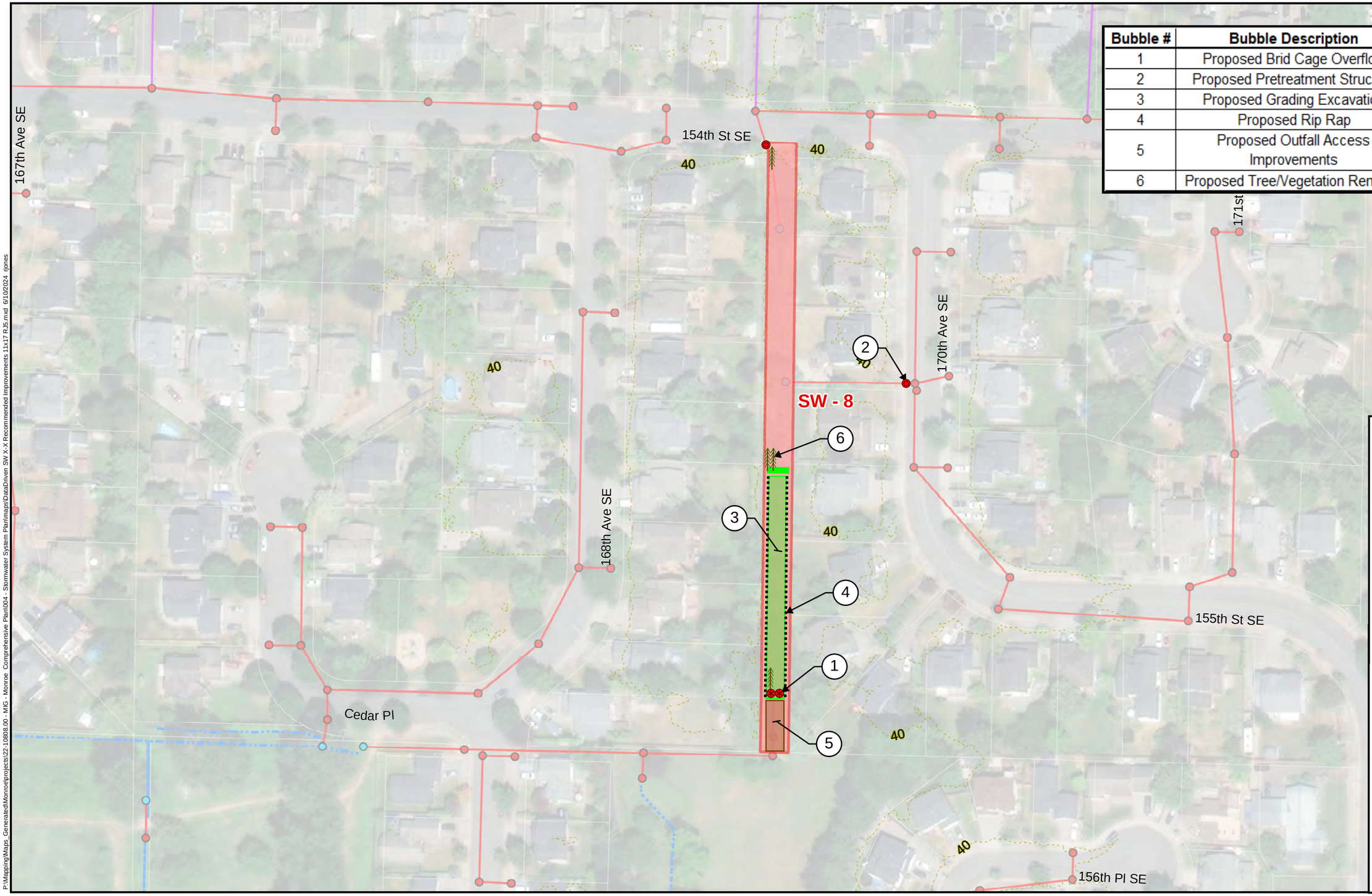

Legend

- Proposed Bird Cage Overflow
- Proposed Pretreatment Structure
- Proposed Grading Excavation
- Proposed Rip Rap
- Proposed Outfall Access Cleaning
- Proposed Tree/Vegetation Removal
- Project Area
- Storm Drain Outfall
- City Owned MH
- Privately Owned MH
- City Owned Main
- Privately Owned Main
- Channel/Ditch/Bioswale
- 10ft Contour
- City of Monroe
- UGA Boundary

P:\Mapping\Maps_Generated\Monroe\projects\22-10808.00 - MIG - Monroe Comprehensive Plan\004 - Stormwater System Plan\maps\DataDriven SW X-X Recommended Improvements 11x17 RJS.mxd 6/10/2024 rjones

Stormwater System: City of Monroe 204

Snohomish County base data 2024

Service Layer Credits: Source: Esri, Maxar, Earthstar Geographics, and the GIS User Community

Data sources supplied may not reflect current or actual conditions. This map is a geographic representation based on information available. It does not represent survey data. No warranty is made concerning the accuracy, currency, or completeness of data depicted on this map. BHC Consultants LLC., assumes no responsibility for the validity of any information presented herein, nor any responsibility for the use or misuse of the data.

N

0 100 200 Feet

154th and 170th Avenue Pond

Capital Improvement Project SW - 8

Utility Systems Plan - Stormwater
City of Monroe, Washington
September 2024

COPYRIGHT © 2024 BHC CONSULTANTS LLC., ALL RIGHTS RESERVED

SW - 2

BEATON DITCH

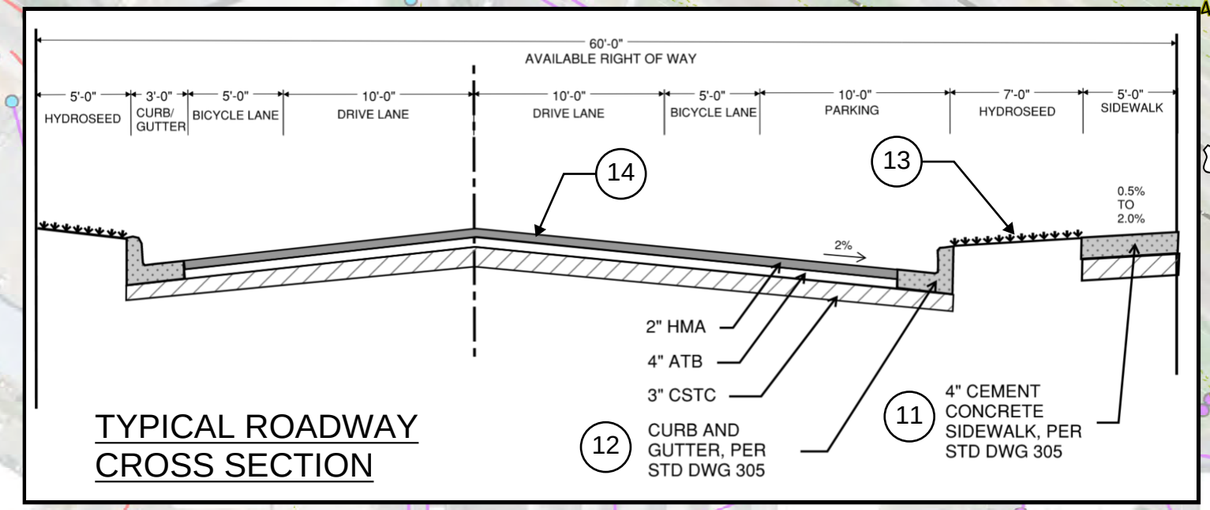

TYPICAL ROADWAY CROSS SECTION

Bubble #	Bubble Description	Quantity	
1	Remove/Abandon Storm Line	1,200	LF
2	Remove/Abandon Ditch	650	LF
3	Proposed Storm Line (12")	1,670	LF
4	Proposed Storm Line (18")	840	LF
5	Proposed Storm Line (24")	770	LF
6	Proposed Storm Structure	22	EA
7	Proposed Storm Inlet	35	EA
8	Proposed Water Quality Treatment Unit	9	EA
9	Proposed ADA Curb Ramps	29	EA
10	Proposed Crosswalks	1	EA
11	Proposed Sidewalk	1,600	LF
12	Proposed Curb and Gutter	4,000	LF
13	Proposed Hydroseed	26,000	SF
14	Proposed Pavement	110,000	SF

Legend

- Remove/Abandon Storm Line
- Remove Abandon Ditch
- Existing Ditch
- Proposed Storm Line (12") (18") (24")
- Proposed Storm Structure
- Proposed Storm Inlet
- Proposed Water Quality Treatment Unit
- Proposed ADA Curb Ramp
- Proposed Crosswalk
- Proposed Sidewalk
- Project Area
- Storm Drain Outfall
- City Owned MH
- Privately Owned MH
- City Owned Main
- Privately Owned Main
- Channel/Ditch/Bioswale
- 10ft Contour
- City of Monroe
- UGA Boundary

Beaton Rd SE

2nd Dr SE

147th St SE

24" 18"

18" 12"

SW - 9

SW - 15

Stormwater System: City of Monroe 204

Snohomish County base data 2024

Service Layer Credits: Source: Esri, Maxar, Earthstar Geographics, and the GIS User Community

Data sources supplied may not reflect current or actual conditions. This map is a geographic representation based on information available. It does not represent survey data. No warranty is made concerning the accuracy, currency, or completeness of data depicted on this map. BHC Consultants LLC., assumes no responsibility for the validity of any information presented herein, nor any responsibility for the use or misuse of the data.

N

0 150 300 Feet

Beaton Road / Industrial Park

Capital Improvement Project SW - 9

Utility Systems Plan - Stormwater

City of Monroe, Washington

September 2024

COPYRIGHT © 2024 BHC CONSULTANTS LLC., ALL RIGHTS RESERVED

P:\Mapping\Maps_Generated\Monroe\projects\22-10808.00 - MG - Monroe Comprehensive Plan\004 - Stormwater System Plan\maps\DataDriven SW X-X Recommended Improvements 11x17 RJS.mxd 6/10/2024 rjones

Bubble #	Bubble Description	Quantity	
1	Proposed Storm Line (12")	450	LF
2	Proposed Storm Structure	15	EA
3	Proposed Storm Inlet	15	EA

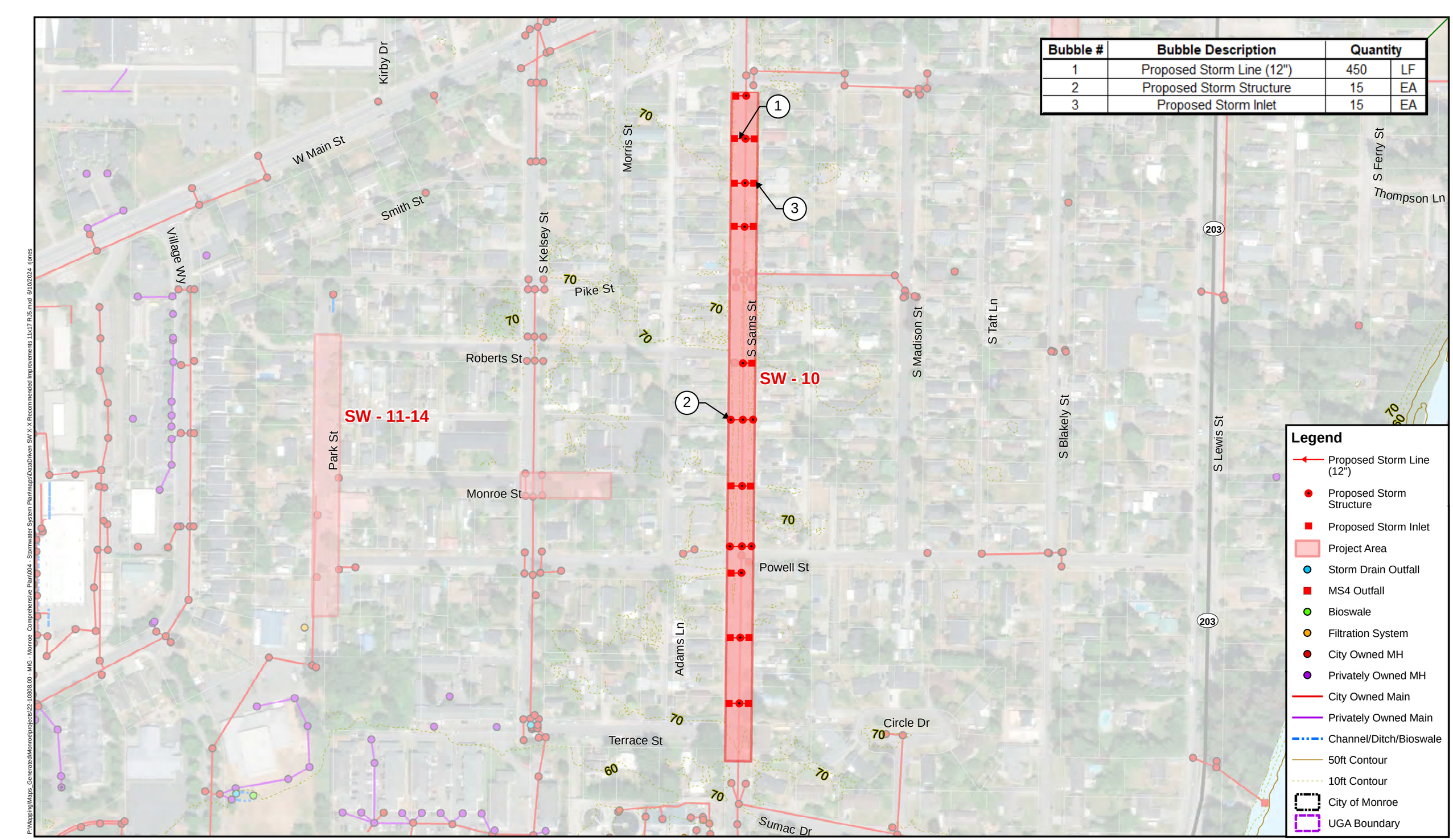

Legend

- Proposed Storm Line (12")
- Proposed Storm Structure
- Proposed Storm Inlet
- Project Area
- Storm Drain Outfall
- MS4 Outfall
- Bioswale
- Filtration System
- City Owned MH
- Privately Owned MH
- City Owned Main
- Privately Owned Main
- Channel/Ditch/Bioswale
- 50ft Contour
- 10ft Contour
- City of Monroe
- UGA Boundary

P:\Mapping\Maps_Generated\Monroe\projects\22-110808.00 - MIG - Monroe Comprehensive Plan\004 - Stormwater System Plan\maps\Data\Driven SW X-X Recommended Improvements 11x17 RJS.mxd 6/10/2024 rjones

Stormwater System: City of Monroe 204

Snohomish County base data 2024

Service Layer Credits: Source: Esri, Maxar, Earthstar Geographics, and the GIS User Community

Data sources supplied may not reflect current or actual conditions. This map is a geographic representation based on information available. It does not represent survey data. No warranty is made concerning the accuracy, currency, or completeness of data depicted on this map. BHC Consultants LLC., assumes no responsibility for the validity of any information presented herein, nor any responsibility for the use or misuse of the data.

N

0 200 400 Feet

Sams Street

Capital Improvement Project SW - 10

Utility Systems Plan - Stormwater
City of Monroe, Washington
September 2024

COPYRIGHT © 2024 BHC CONSULTANTS LLC., ALL RIGHTS RESERVED

Bubble #	Bubble Description	Quantity	
1	Proposed Storm Line (12")	860	LF
2	Proposed Storm Structure	11	EA
3	Proposed Storm Inlet	10	EA
4	Proposed Type 1 HMA Extruded Curb	1,740	LF

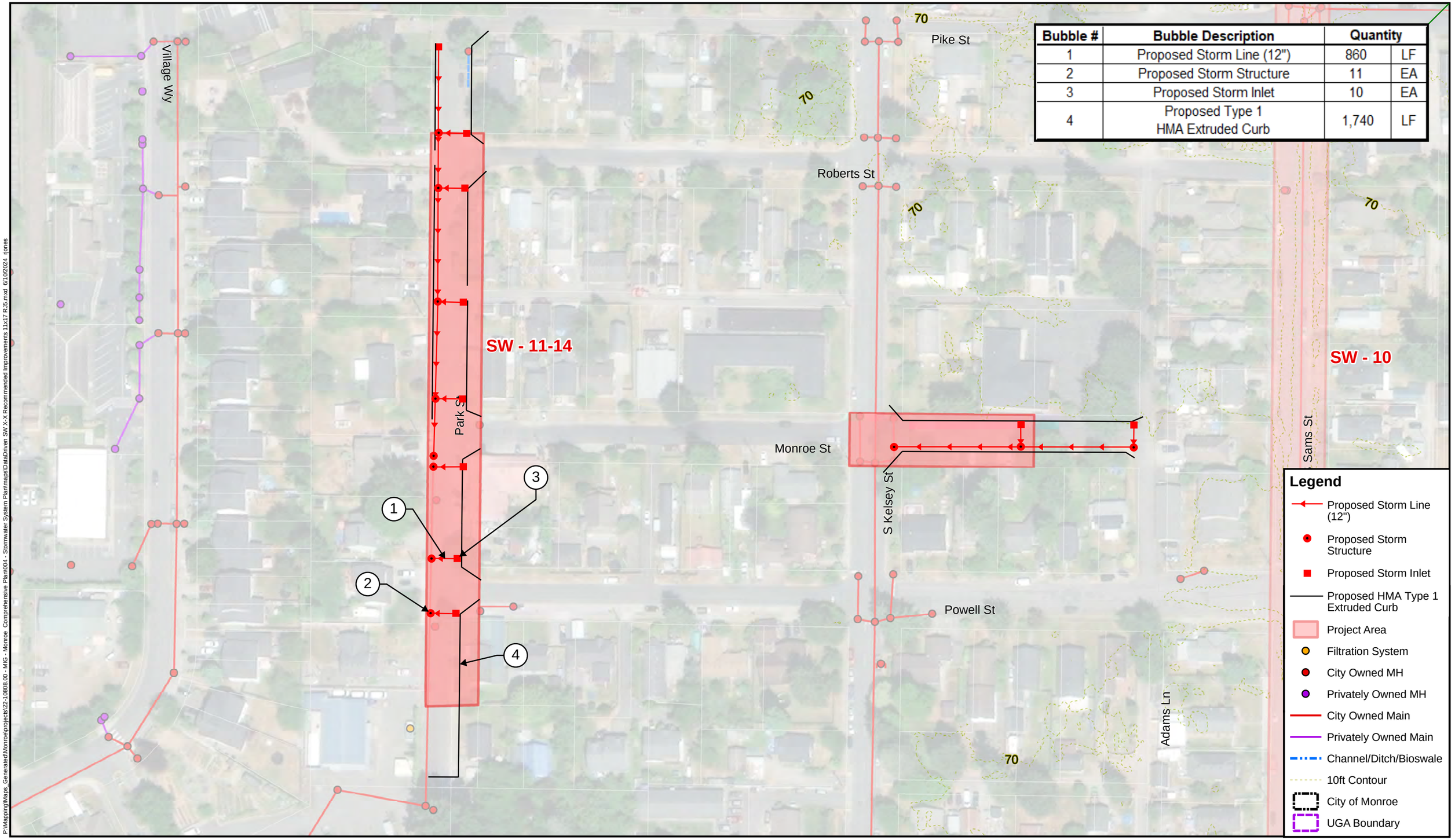

Legend

- Proposed Storm Line (12")
- Proposed Storm Structure
- Proposed Storm Inlet
- Proposed HMA Type 1 Extruded Curb
- Project Area
- Filtration System
- City Owned MH
- Privately Owned MH
- City Owned Main
- Privately Owned Main
- Channel/Ditch/Bioswale
- 10ft Contour
- City of Monroe
- UGA Boundary

P:\Mapping\Maps_Generated\Monroe\projects\22-10808.00 - MIG - Monroe Comprehensive Plan\maps\Data\Driven SW X-X Recommended Improvements 11x17 RJS.mxd 6/10/2024 rjones

Stormwater System: City of Monroe 204

Snohomish County base data 2024

Service Layer Credits: Source: Esri, Maxar, Earthstar Geographics, and the GIS User Community

Data sources supplied may not reflect current or actual conditions. This map is a geographic representation based on information available. It does not represent survey data. No warranty is made concerning the accuracy, currency, or completeness of data depicted on this map. BHC Consultants LLC., assumes no responsibility for the validity of any information presented herein, nor any responsibility for the use or misuse of the data.

N

0 100 200 Feet

Park, Powell, Monroe, Roberts, and Kelsey

Capital Improvement Project SW - 11-14

Utility Systems Plan - Stormwater
City of Monroe, Washington
September 2024

COPYRIGHT © 2024 BHC CONSULTANTS LLC., ALL RIGHTS RESERVED

Bubble #	Bubble Description	Quantity	
1	Proposed Grading Excavation & Hydroseed	933	CY
2	Proposed HMA Paved Access Road	2,400	SF

SW - 15

1

2

40

40

40

40

149th Pl SE

149th St SE

173rd Ave SE

Legend

- Proposed Grading Excavation & Hydroseed
- Proposed HMA Paved Access Road
- Project Area
- Storm Drain Outfall
- City Owned MH
- Privately Owned MH
- City Owned Main
- Privately Owned Main
- Channel/Ditch/Bioswale
- 10ft Contour
- City of Monroe
- UGA Boundary

P:\Mapping\Maps_Generated\Monroe\projects\22-10808.00 - MIG - Monroe Comprehensive Plan\004 - Stormwater System Plan\maps\DataDriven SW X-X Recommended Improvements 11x17 RJS.mxd 6/10/2024 rjones

Stormwater System: City of Monroe 204

Snohomish County base data 2024

Service Layer Credits: Source: Esri, Maxar, Earthstar Geographics, and the GIS User Community

Data sources supplied may not reflect current or actual conditions. This map is a geographic representation based on information available. It does not represent survey data. No warranty is made concerning the accuracy, currency, or completeness of data depicted on this map. BHC Consultants LLC., assumes no responsibility for the validity of any information presented herein, nor any responsibility for the use or misuse of the data.

N

0 50 100 Feet

Concrete Pond 149th Street and 173rd Ave

Capital Improvement Project SW - 15

Utility Systems Plan - Stormwater
City of Monroe, Washington
September 2024

COPYRIGHT © 2024 BHC CONSULTANTS LLC., ALL RIGHTS RESERVED

Bubble #	Bubble Description	Quantity	
1	Proposed Oil Water Sparator (96 GPM)	1	EA

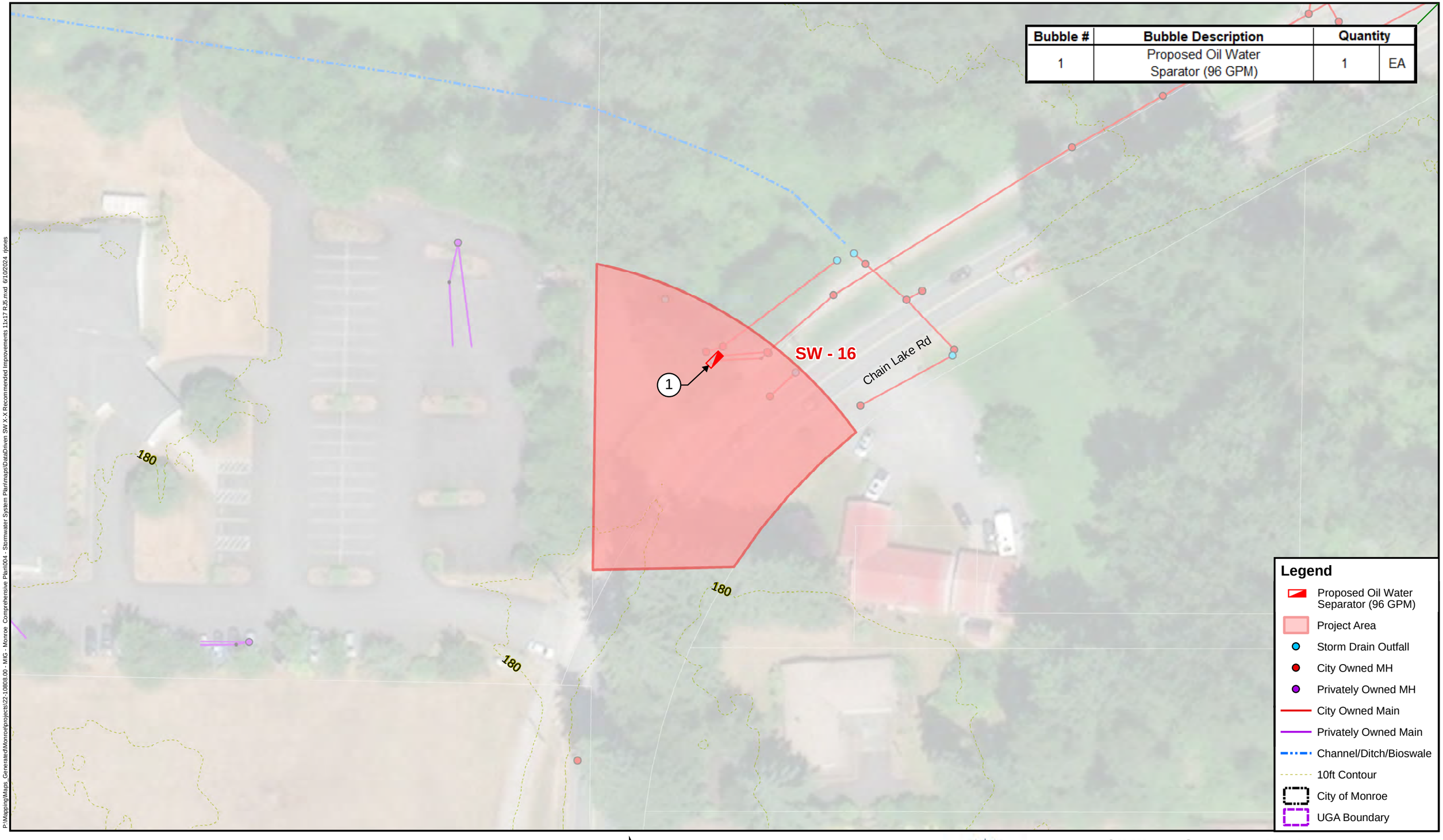

Legend

- Proposed Oil Water Separator (96 GPM)
- Project Area
- Storm Drain Outfall
- City Owned MH
- Privately Owned MH
- City Owned Main
- Privately Owned Main
- Channel/Ditch/Bioswale
- 10ft Contour
- City of Monroe
- UGA Boundary

P:\Mapping\Maps_Generated\Monroe\projects\22-10808.00 - MG - Monroe_Comprehensive Plan\004 - Stormwater System Plan\mxds\DataDriven SW X-X Recommended Improvements 11x17 RJS.mxd 6/10/2024 rjones

Stormwater System: City of Monroe 204

Snohomish County base data 2024

Service Layer Credits: Source: Esri, Maxar, Earthstar Geographics, and the GIS User Community

Data sources supplied may not reflect current or actual conditions. This map is a geographic representation based on information available. It does not represent survey data. No warranty is made concerning the accuracy, currency, or completeness of data depicted on this map. BHC Consultants LLC., assumes no responsibility for the validity of any information presented herein, nor any responsibility for the use or misuse of the data.

N

0 50 100 Feet

Oil Water Separator Vault

Capital Improvement Project SW - 16

Utility Systems Plan - Stormwater
City of Monroe, Washington
September 2024

COPYRIGHT © 2024 BHC CONSULTANTS LLC., ALL RIGHTS RESERVED

Appendix SW-B

Capital Improvement Project Opinion of Probable Project Costs (OPPC)

THIS PAGE INTENTIONALLY BLANK

Capital Improvement Plan
Planning Level Opinion of Probable Project Costs

SW-1 Lake Tye South Inlet

Prepared by: C.Yeh-Tinetti
Reviewed by: C.Talich

Bid Item No.	Bid Item Description	Unit Bid Price	Quantity	Unit	Total
1	Mobilization / Demobilization	$36,400	1	LS	$36,400
2	Temporary Erosion & Sediment Control	$14,600	1	LS	$14,600
3	Dewatering	$54,487	1	LS	$54,487
4	Clearing and Grubbing	$9	3,690	SF	$33,272
5	Bioretention Media Filter Cell with Tree Feature	$229,539	1	LS	$229,539
6	Channel Excavation Including Haul	$39	600	CY	$23,186
7	Hydroseed	$5	9,950	SF	$23,186
8	Traffic Control	$14,600	1	LS	$14,600
9	General Restoration	$7,300	1	LS	$7,300
	Construction Costs Subtotal				**$436,569**
	Construction Contingency	30%			$130,971
	Sales Tax	9.4%			$53,349
	Total Opinion of Probable Construction Cost				**$621,000**
	Allied Costs				
	Planning	5%			$32,000
	Design and Permitting	25%			$156,000
	Services During Construction	10%			$63,000
	Total Opinion of Probable Allied Cost				**$251,000**
	TOTAL ESTIMATED PROJECT COST				**$872,000**

Assumptions, Notes

1. Import backfill assumed to be 100%
2. Foundation Gravel assumed to be 100% imported
3. Mobilization assumed to be 10% of construction costs
4. Temporary Erosion Control assumed to be 4% of construction costs
5. Pipe costs includes all excavation, pipe, fittings, bedding, imported backfill, and haul
6. Traffic Control assumed to be 4% of construction costs
7. General Restoration assumed to be 2% of construction costs
8. Costs are in 2024 dollars

The opinion of probable cost herein is based on our perception of current conditions at the project location. This opinion reflects our professional opinion of costs at this time and is subject to change as the project design progresses. BHC Consultants has no control over variances in the cost of labor, materials, equipment; nor services provided by others, contractor's means and methods of executing the work or of determining prices, competitive bidding or market conditions, practices or bidding strategies. BHC Consultants cannot and does not warrant or guarantee that proposals, bids, or actual construction costs will not vary from the costs presented as shown.

Capital Improvement Plan
Planning Level Opinion of Probable Project Costs

SW-2 Beaton Ditch

Prepared by: C.Yeh-Tinetti
Reviewed by: C.Talich

Bid Item No.	Bid Item Description	Unit Bid Price	Quantity	Unit	Total
1	Mobilization	$47,600	1	LS	$47,600
2	Temporary Erosion & Sediment Control	$23,800	1	LS	$23,800
3	Clearing and Grubbing	$9	19,800	SF	$178,531
4	Channel Excavation Including Haul	$39	792	CY	$30,605
5	Embankment Compaction	$10	792	CY	$7,920
6	Roadway Excavation Including Haul	$100	244	CY	$24,444
7	Slide Gate	$100,000	1	LS	$100,000
8	Crushed Surfacing	$50	276	TN	$13,811
9	Bird Cage Overflow	$10,400	2	EA	$20,800
10	Hydroseed	$5	19,800	SF	$99,000
11	Traffic Control	$14,300	1	LS	$14,300
12	General Restoration	$9,600	1	LS	$9,600
	Construction Costs Subtotal				**$570,411**
	Construction Contingency	30%			$171,123
	Sales Tax	9.4%			$69,704
	Total Opinion of Probable Construction Cost				**$811,000**
	Allied Costs				
	Planning	10%			$82,000
	Design and Permitting	25%			$203,000
	Services During Construction	10%			$82,000
	Total Opinion of Probable Allied Cost				**$367,000**
	TOTAL ESTIMATED PROJECT COST (ROUNDED UP TO NEAREST $1,000)				**$1,178,000**

Assumptions, Notes

1. Import backfill assumed to be 100%
2. Foundation Gravel assumed to be 100% imported
3. Mobilization assumed to be 10% of construction costs
4. Temporary Erosion Control assumed to be 5% of construction costs
5. Pipe costs includes all excavation, pipe, fittings, bedding, imported backfill, and haul
6. Traffic Control assumed to be 3% of construction costs
7. General Restoration assumed to be 2% of construction costs
8. Costs are in 2024 dollars

The opinion of probable cost herein is based on our perception of current conditions at the project location. This opinion reflects our professional opinion of costs at this time and is subject to change as the project design progresses. BHC Consultants has no control over variances in the cost of labor, materials, equipment; nor services provided by others, contractor's means and methods of executing the work or of determining prices, competitive bidding or market conditions, practices or bidding strategies. BHC Consultants cannot and does not warrant or guarantee that proposals, bids, or actual construction costs will not vary from the costs presented as shown.

Capital Improvement Plan
Planning Level Opinion of Probable Project Costs

SW-3 & SW-4 Arbor Heights Ditch & Tester Road

Prepared by: C.Yeh-Tinetti
Reviewed by: C.Talich

Bid Item No.	Bid Item Description	Unit Bid Price	Quantity	Unit	Total
1	Mobilization	$19,100	1	LS	$19,100
2	Temporary Erosion & Sediment Control	$15,300	1	LS	$15,300
3	Dewatering	$2,250	1	LS	$2,250
4	Grading Excavation Including Haul	$39	90	CY	$3,478
5	Embankment Compaction	$10	90	CY	$900
6	Crushed Surfacing	$50	102	TN	$5,085
7	Tree Removal & Vegetation Management	$10,000	1	EA	$10,000
8	12-inch PVC Stormdrain Pipe	$160	170	LF	$27,200
9	Type 1 Catch Basin	$4,000	2	EA	$8,000
10	Type 2 Catch Basin (60-inch diameter)	$9,600	1	EA	$9,600
11	Bird Cage Overflow	$10,400	3	EA	$31,200
12	Rock Check Dam	$444	8	EA	$3,556
13	Surface Water Diversion	$20,000	1	LS	$20,000
14	Hydroseed	$5	11,550	SF	$57,750
15	HMA Trench Patch	$250	20	TN	$5,000
16	HMA Grind & Overlay	$350	10	TN	$3,500
17	HMA Sawcut and Seal	$30	80	LF	$2,400
18	Sheeting, Shoring, Bracing	$10	80	LF	$800
19	Traffic Control	$15,300	1	LS	$15,300
20	General Restoration	$3,900	1	LS	$3,900
	Construction Costs Subtotal				**$244,318**
	Construction Contingency	30%			$73,296
	Sales Tax	9.4%			$29,856
	Total Opinion of Probable Construction Cost				**$347,000**
	Allied Costs				
	Planning	10%			$35,000
	Design and Permitting	25%			$87,000
	Services During Construction	10%			$35,000
	Total Opinion of Probable Allied Cost				**$157,000**
	TOTAL ESTIMATED PROJECT COST (ROUNDED UP TO NEAREST $1,000)				**$504,000**

Assumptions, Notes

1. Import backfill assumed to be 100%
2. Foundation Gravel assumed to be 100% imported
3. Mobilization assumed to be 10% of construction costs
4. Temporary Erosion Control assumed to be 8% of construction costs
5. Pipe costs includes all excavation, pipe, fittings, bedding, imported backfill, and haul
6. Traffic Control assumed to be 8% of construction costs
7. General Restoration assumed to be 2% of construction costs
8. Costs are in 2024 dollars

The opinion of probable cost herein is based on our perception of current conditions at the project location. This opinion reflects our professional opinion of costs at this time and is subject to change as the project design progresses. BHC Consultants has no control over variances in the cost of labor, materials, equipment; nor services provided by others, contractor's means and methods of executing the work or of determining prices, competitive bidding or market conditions, practices or bidding strategies. BHC Consultants cannot and does not warrant or guarantee that proposals, bids, or actual construction costs will not vary from the costs presented as shown.

Capital Improvement Plan
Planning Level Opinion of Probable Project Costs

SW-5 Downtown Porous Concrete

Prepared by: C.Yeh-Tinetti
Reviewed by: C.Talich

Bid Item No.	Bid Item Description	Unit Bid Price	Quantity	Unit	Total
1	Mobilization	$121,700	1	LS	$121,700
2	Temporary Erosion & Sediment Control	$24,400	1	LS	$24,400
3	Trenching 4-feet	$8	1,020	CY	$8,160
4	Dewatering	$25,650	1	LS	$25,650
5	12-inch PVC Stormdrain Pipe	$160	1,710	LF	$273,600
6	Concrete Inlet	$1,656	23	EA	$38,088
7	Type 2 Catch Basin (60-inch diameter)	$9,600	16	EA	$153,600
8	Concrete Demolition	$75	4,000	SF	$300,000
9	Cement Concrete Pavement	$100	2,080	SF	$208,000
10	HMA Paving	$150	90	TN	$13,500
11	HMA Trench Patch	$250	300	TN	$75,000
12	HMA Grind & Overlay	$350	150	TN	$52,500
13	HMA Sawcut and Seal	$30	1,710	LF	$51,300
14	Sheeting, Shoring, Bracing	$10	1,710	LF	$17,100
15	Traffic Control	$48,700	1	LS	$48,700
16	General Restoration	$24,400	1	LS	$24,400
	Construction Costs Subtotal				**$1,435,698**
	Construction Contingency	30%			$430,709
	Sales Tax	9.4%			$175,442
	Total Opinion of Probable Construction Cost				**$2,042,000**
	Allied Costs				
	Planning	5%			$103,000
	Design and Permitting	15%			$307,000
	Services During Construction	5%			$103,000
	Total Opinion of Probable Allied Cost				**$513,000**
	TOTAL ESTIMATED PROJECT COST (ROUNDED UP TO NEAREST $1,000)				**$2,555,000**

Assumptions, Notes

1. Import backfill assumed to be 100%
2. Foundation Gravel assumed to be 100% imported
3. Mobilization assumed to be 10% of construction costs
4. Temporary Erosion Control assumed to be 2% of construction costs
5. Pipe costs includes all excavation, pipe, fittings, bedding, imported backfill, and haul
6. Traffic Control assumed to be 4% of construction costs
7. General Restoration assumed to be 2% of construction costs
8. Costs are in 2024 dollars

The opinion of probable cost herein is based on our perception of current conditions at the project location. This opinion reflects our professional opinion of costs at this time and is subject to change as the project design progresses. BHC Consultants has no control over variances in the cost of labor, materials, equipment; nor services provided by others, contractor's means and methods of executing the work or of determining prices, competitive bidding or market conditions, practices or bidding strategies. BHC Consultants cannot and does not warrant or guarantee that proposals, bids, or actual construction costs will not vary from the costs presented as shown.

Capital Improvement Plan
Planning Level Opinion of Probable Project Costs

SW-6 Tyler Lane Storm Basin

Prepared by: C.Yeh-Tinetti
Reviewed by: C.Talich

Bid Item No.	Bid Item Description	Unit Bid Price	Quantity	Unit	Total
1	Mobilization	$10,200	1	LS	$10,200
2	Temporary Erosion & Sediment Control	$2,100	1	LS	$2,100
3	Trenching 4-feet	$8	40	CY	$320
4	Dewatering	$300	1	LS	$300
5	12-inch PVC Stormdrain Pipe	$160	20	LF	$3,200
6	Type 1 Catch Basin	$4,000	1	EA	$4,000
7	Type 2 Catch Basin (60-inch diameter)	$9,600	2	EA	$19,200
8	Connection to Drainage Structure	$2,800	1	EA	$2,800
9	Pretreatment Structure 60-inch	$48,666	1	EA	$48,666
10	Underdrain Pipe 18-inch	$87	50	LF	$4,350
11	HMA Paving	$150	23	TN	$3,413
12	HMA Speed Bump	$25	20	LF	$500
13	HMA Trench Patch	$250	20	TN	$5,000
14	HMA Grind & Overlay	$350	20	TN	$7,000
15	HMA Sawcut and Seal	$30	70	LF	$2,100
16	Sheeting, Shoring, Bracing	$10	70	LF	$700
17	Traffic Control	$4,100	1	LS	$4,100
18	General Restoration	$2,100	1	LS	$2,100
	Construction Costs Subtotal				**$120,049**
	Construction Contingency	30%			$36,015
	Sales Tax	9.4%			$14,670
	Total Opinion of Probable Construction Cost				**$171,000**
	Allied Costs				
	Planning	5%			$9,000
	Design and Permitting	15%			$26,000
	Services During Construction	5%			$9,000
	Total Opinion of Probable Allied Cost				**$44,000**
	TOTAL ESTIMATED PROJECT COST (ROUNDED UP TO NEAREST $1,000)				**$215,000**

Assumptions, Notes

1. Import backfill assumed to be 100%
2. Foundation Gravel assumed to be 100% imported
3. Mobilization assumed to be 10% of construction costs
4. Temporary Erosion Control assumed to be 2% of construction costs
5. Pipe costs includes all excavation, pipe, fittings, bedding, imported backfill, and haul
6. Traffic Control assumed to be 4% of construction costs
7. General Restoration assumed to be 2% of construction costs
8. Costs are in 2024 dollars

The opinion of probable cost herein is based on our perception of current conditions at the project location. This opinion reflects our professional opinion of costs at this time and is subject to change as the project design progresses. BHC Consultants has no control over variances in the cost of labor, materials, equipment; nor services provided by others, contractor's means and methods of executing the work or of determining prices, competitive bidding or market conditions, practices or bidding strategies. BHC Consultants cannot and does not warrant or guarantee that proposals, bids, or actual construction costs will not vary from the costs presented as shown.

Capital Improvement Plan
Planning Level Opinion of Probable Project Costs

SW-7 Magnuson Park

Prepared by: C.Yeh-Tinetti
Reviewed by: C.Talich

Bid Item No.	Bid Item Description	Unit Bid Price	Quantity	Unit	Total
1	Mobilization	$17,700	1	LS	$17,700
2	Temporary Erosion & Sediment Control	$3,600	1	LS	$3,600
3	Trenching 4-feet	$8	160	CY	$1,280
4	Dewatering	$3,450	1	LS	$3,450
5	12-inch PVC Stormdrain Pipe	$160	230	LF	$36,800
6	Type 2 Catch Basin (60-inch diameter)	$9,600	2	EA	$19,200
7	Stormtech SC-740	$15,000	1	LS	$15,000
8	Gravel Burrow Including Haul	$50	23	TN	$1,130
9	Pretreatment Structure 60-inch	$48,666	2	EA	$97,332
10	Sheeting, Shoring, Bracing	$10	230	LF	$2,300
11	Traffic Control	$3,600	1	LS	$3,600
12	General Restoration	$3,600	1	LS	$3,600
	Construction Costs Subtotal				**$204,992**
	Construction Contingency	30%			$61,498
	Sales Tax	9.4%			$25,050
	Total Opinion of Probable Construction Cost				**$292,000**
	Allied Costs				
	Planning	5%			$15,000
	Land Acquisition Easement	10%			$30,000
	Design and Permitting	15%			$44,000
	Services During Construction	5%			$15,000
	Total Opinion of Probable Allied Cost				**$104,000**
	TOTAL ESTIMATED PROJECT COST (ROUNDED UP TO NEAREST $1,000)				**$396,000**

Assumptions, Notes

1. Import backfill assumed to be 100%
2. Foundation Gravel assumed to be 100% imported
3. Mobilization assumed to be 10% of construction costs
4. Temporary Erosion Control assumed to be 2% of construction costs
5. Pipe costs includes all excavation, pipe, fittings, bedding, imported backfill, and haul
6. Traffic Control assumed to be 2% of construction costs
7. General Restoration assumed to be 2% of construction costs
8. Costs are in 2024 dollars

The opinion of probable cost herein is based on our perception of current conditions at the project location. This opinion reflects our professional opinion of costs at this time and is subject to change as the project design progresses. BHC Consultants has no control over variances in the cost of labor, materials, equipment; nor services provided by others, contractor's means and methods of executing the work or of determining prices, competitive bidding or market conditions, practices or bidding strategies. BHC Consultants cannot and does not warrant or guarantee that proposals, bids, or actual construction costs will not vary from the costs presented as shown.

Capital Improvement Plan
Planning Level Opinion of Probable Project Costs

SW-8 154th and 170th Avenue Pond

Prepared by: C.Yeh-Tinetti
Reviewed by: C.Talich

Bid Item No.	Bid Item Description	Unit Bid Price	Quantity	Unit	Total
1	Mobilization	$32,100	1	LS	$32,100
2	Temporary Erosion & Sediment Control	$12,900	1	LS	$12,900
3	Dewatering	$103,125	1	LS	$103,125
4	Tree Removal & Vegetation Management	$10,000	1	LS	$10,000
5	Outfall Access	$25,000	1	LS	$25,000
6	Baffle Wall Removal	$1,000	1	LS	$1,000
7	Grading Excavation Including Haul	$39	509	CY	$19,679
8	12-inch PVC Stormdrain Pipe	$160	50	LF	$8,000
9	Pretreatment Structure 60-inch	$48,666	2	EA	$97,332
10	Bird Cage Overflow	$10,400	2	EA	$20,800
11	Connection to Existing Storm Drain	$2,800	2	EA	$5,600
12	Riprap	$150	153	CY	$22,950
13	HMA Trench Patch	$250	10	TN	$2,500
14	HMA Grind & Overlay	$350	10	TN	$3,500
15	HMA Sawcut and Seal	$30	50	LF	$1,500
16	Weed Control & Native Plantings in Park to the South of Outfall	$50,000	1	LS	$50,000
17	General Restoration	$6,500	1	LS	$6,500
	Construction Costs Subtotal				**$422,486**
	Construction Contingency	30%			$126,746
	Sales Tax	9.4%			$51,628
	Total Opinion of Probable Construction Cost				**$601,000**
	Allied Costs				
	Planning	5%			$31,000
	Design and Permitting	20%			$121,000
	Services During Construction	10%			$61,000
	Total Opinion of Probable Allied Cost				**$213,000**
	TOTAL ESTIMATED PROJECT COST (ROUNDED UP TO NEAREST $1,000)				**$814,000**

Assumptions, Notes

1. Import backfill assumed to be 100%
2. Foundation Gravel assumed to be 100% imported
3. Mobilization assumed to be 10% of construction costs
4. Temporary Erosion Control assumed to be 4% of construction costs
5. Pipe costs includes all excavation, pipe, fittings, bedding, imported backfill, and haul
7. General Restoration assumed to be 2% of construction costs
8. Costs are in 2024 dollars

The opinion of probable cost herein is based on our perception of current conditions at the project location. This opinion reflects our professional opinion of costs at this time and is subject to change as the project design progresses. BHC Consultants has no control over variances in the cost of labor, materials, equipment; nor services provided by others, contractor's means and methods of executing the work or of determining prices, competitive bidding or market conditions, practices or bidding strategies. BHC Consultants cannot and does not warrant or guarantee that proposals, bids, or actual construction costs will not vary from the costs presented as shown.

Capital Improvement Plan
Planning Level Opinion of Probable Project Costs

SW-9 Beaton Road / Industrial Park

Prepared by: C.Yeh-Tinetti
Reviewed by: C.Talich

Bid Item No.	Bid Item Description	Unit Bid Price	Quantity	Unit	Total
1	Mobilization	$262,700	1	LS	$262,700
2	Temporary Erosion & Sediment Control	$105,100	1	LS	$105,100
3	Abandon Existing Storm	$20	1,200	LF	$24,000
4	Abandon Ditch	$40	301	TN	$12,053
5	Trenching 4-feet	$8	2,000	CY	$16,000
6	Dewatering	$49,200	1	LS	$49,200
7	12-inch PVC Stormdrain Pipe	$160	1,670	LF	$267,200
8	18-inch PVC Stormdrain Pipe	$160	840	LF	$134,400
9	24-inch PVC Stormdrain Pipe	$280	770	LF	$215,600
10	Type 1 Catch Basin	$4,000	35	EA	$140,000
11	Type 2 Catch Basin (48-inch diameter)	$7,700	22	EA	$169,400
12	Water Quality Unit	$20,000	9	EA	$180,000
13	Sidewalk	$203	889	SY	$180,444
14	Curb and Gutter	$95	4,000	LF	$380,000
15	ADA Curb Ramp	$4,000	29	EA	$116,000
16	Paint Line	$5	203	LF	$1,013
17	Hydroseed	$5	26,000	SF	$130,000
18	HMA Paving	$150	1,570	TN	$235,500
19	HMA Grind & Overlay	$350	980	TN	$343,000
20	Sheeting, Shoring, Bracing	$10	3,280	LF	$32,800
21	Traffic Control	$131,400	1	LS	$131,400
22	General Restoration	$78,800	1	LS	$78,800
	Construction Costs Subtotal				**$3,204,610**
	Construction Contingency	30%			$961,383
	Sales Tax	9.4%			$391,603
	Total Opinion of Probable Construction Cost				**$4,558,000**
	Allied Costs				
	Planning	5%			$228,000
	Design and Permitting	10%			$456,000
	Services During Construction	5%			$228,000
	Total Opinion of Probable Allied Cost				**$912,000**
	TOTAL ESTIMATED PROJECT COST (ROUNDED UP TO NEAREST $1,000)				**$5,470,000**

Assumptions, Notes

1. Import backfill assumed to be 100%
2. Foundation Gravel assumed to be 100% imported
3. Mobilization assumed to be 10% of construction costs
4. Temporary Erosion Control assumed to be 4% of construction costs
5. Pipe costs includes all excavation, pipe, fittings, bedding, imported backfill, and haul
6. Traffic Control assumed to be 5% of construction costs
7. General Restoration assumed to be 3% of construction costs
8. Costs are in 2024 dollars

The opinion of probable cost herein is based on our perception of current conditions at the project location. This opinion reflects our professional opinion of costs at this time and is subject to change as the project design progresses. BHC Consultants has no control over variances in the cost of labor, materials, equipment; nor services provided by others, contractor's means and methods of executing the work or of determining prices, competitive bidding or market conditions, practices or bidding strategies. BHC Consultants cannot and does not warrant or guarantee that proposals, bids, or actual construction costs will not vary from the costs presented as shown.

Capital Improvement Plan
Planning Level Opinion of Probable Project Costs

SW-10 Sams Street

Prepared by: C.Yeh-Tinetti
Reviewed by: C.Talich

Bid Item No.	Bid Item Description	Unit Bid Price	Quantity	Unit	Total
1	Mobilization	$30,200	1	LS	$30,200
2	Temporary Erosion & Sediment Control	$6,100	1	LS	$6,100
3	Trenching 4-feet	$8	270	CY	$2,160
4	Dewatering	$6,750	1	LS	$6,750
5	12-inch PVC Stormdrain Pipe	$160	450	LF	$72,000
6	Concrete Inlet	$1,656	15	EA	$24,840
7	Type 2 Catch Basin (60-inch diameter)	$9,600	15	EA	$144,000
8	HMA Trench Patch	$250	80	TN	$20,000
9	HMA Grind & Overlay	$350	40	TN	$14,000
10	HMA Sawcut and Seal	$30	450	LF	$13,500
11	Sheeting, Shoring, Bracing	$10	450	LF	$4,500
12	Traffic Control	$15,100	1	LS	$15,100
13	General Restoration	$6,100	1	LS	$6,100
	Construction Costs Subtotal				**$359,250**
	Construction Contingency	30%			$107,775
	Sales Tax	9.4%			$43,900
	Total Opinion of Probable Construction Cost				**$511,000**
	Allied Costs				
	Planning	5%			$26,000
	Design and Permitting	15%			$77,000
	Services During Construction	5%			$26,000
	Total Opinion of Probable Allied Cost				**$129,000**
	TOTAL ESTIMATED PROJECT COST (ROUNDED UP TO NEAREST $1,000)				**$640,000**

Assumptions, Notes

1. Import backfill assumed to be 100%
2. Foundation Gravel assumed to be 100% imported
3. Mobilization assumed to be 10% of construction costs
4. Temporary Erosion Control assumed to be 2% of construction costs
5. Pipe costs includes all excavation, pipe, fittings, bedding, imported backfill, and haul
6. Traffic Control assumed to be 5% of construction costs
7. General Restoration assumed to be 2% of construction costs
8. Costs are in 2024 dollars

The opinion of probable cost herein is based on our perception of current conditions at the project location. This opinion reflects our professional opinion of costs at this time and is subject to change as the project design progresses. BHC Consultants has no control over variances in the cost of labor, materials, equipment; nor services provided by others, contractor's means and methods of executing the work or of determining prices, competitive bidding or market conditions, practices or bidding strategies. BHC Consultants cannot and does not warrant or guarantee that proposals, bids, or actual construction costs will not vary from the costs presented as shown.

Capital Improvement Plan
Planning Level Opinion of Probable Project Costs

SW-11, SW-12, SW-13, and SW-14 **Park, Powell, Monroe, Roberts, & Kelsey Streets**

Prepared by: C.Yeh-Tinetti
Reviewed by: C.Talich

Bid Item No.	Bid Item Description	Unit Bid Price	Quantity	Unit	Total
1	Mobilization	$42,100	1	LS	$42,100
2	Temporary Erosion & Sediment Control	$8,500	1	LS	$8,500
3	Trenching 4-feet	$8	530	CY	$4,240
4	Dewatering	$12,900	1	LS	$12,900
5	12-inch PVC Stormdrain Pipe	$160	860	LF	$137,600
6	Concrete Inlet	$1,656	10	EA	$16,560
7	Type 2 Catch Basin (60-inch diameter)	$9,600	11	EA	$105,600
8	Type 1 HMA Extruded Curb	$25	1,740	LF	$43,500
9	HMA Trench Patch	$250	150	TN	$37,500
10	HMA Grind & Overlay	$350	80	TN	$28,000
11	HMA Sawcut and Seal	$30	860	LF	$25,800
12	Sheeting, Shoring, Bracing	$10	860	LF	$8,600
13	Traffic Control	$21,100	1	LS	$21,100
14	General Restoration	$8,500	1	LS	$8,500
	Construction Costs Subtotal				**$500,500**
	Construction Contingency	30%			$150,150
	Sales Tax	9.4%			$61,161
	Total Opinion of Probable Construction Cost				**$712,000**
	Allied Costs				
	Planning	5%			$36,000
	Design and Permitting	20%			$143,000
	Services During Construction	5%			$36,000
	Total Opinion of Probable Allied Cost				**$215,000**
	TOTAL ESTIMATED PROJECT COST (ROUNDED UP TO NEAREST $1,000)				**$927,000**

Assumptions, Notes

1. Import backfill assumed to be 100%
2. Foundation Gravel assumed to be 100% imported
3. Mobilization assumed to be 10% of construction costs
4. Temporary Erosion Control assumed to be 2% of construction costs
5. Pipe costs includes all excavation, pipe, fittings, bedding, imported backfill, and haul
6. Traffic Control assumed to be 5% of construction costs
7. General Restoration assumed to be 2% of construction costs
8. Costs are in 2024 dollars

The opinion of probable cost herein is based on our perception of current conditions at the project location. This opinion reflects our professional opinion of costs at this time and is subject to change as the project design progresses. BHC Consultants has no control over variances in the cost of labor, materials, equipment; nor services provided by others, contractor's means and methods of executing the work or of determining prices, competitive bidding or market conditions, practices or bidding strategies. BHC Consultants cannot and does not warrant or guarantee that proposals, bids, or actual construction costs will not vary from the costs presented as shown.

Capital Improvement Plan
Planning Level Opinion of Probable Project Costs

SW-15 Concrete Pond 149th Street and 173rd Avenue

Prepared by: C.Yeh-Tinetti
Reviewed by: C.Talich

Bid Item No.	Bid Item Description	Unit Bid Price	Quantity	Unit	Total
1	Mobilization	$26,400	1	LS	$26,400
2	Temporary Erosion & Sediment Control	$15,900	1	LS	$15,900
3	Clearing and Grubbing	$9	15,000	SF	$135,251
4	Grading Excavation Including Haul	$39	933	CY	$36,067
5	Embankment Compaction	$10	933	CY	$9,333
6	Roadway Excavation Including Haul	$100	89	CY	$8,889
7	Gravel Burrow Including Haul	$50	89	CY	$4,444
8	HMA Paving	$150	47	TN	$7,000
9	Hydroseed	$5	12,600	SF	$63,000
10	Traffic Control	$5,300	1	LS	$5,300
11	General Restoration	$5,300	1	LS	$5,300
	Construction Costs Subtotal				**$316,884**
	Construction Contingency	30%			$95,065
	Sales Tax	9.4%			$38,723
	Total Opinion of Probable Construction Cost				**$451,000**
	Allied Costs				
	Planning	5%			$23,000
	Design and Permitting	15%			$68,000
	Services During Construction	5%			$23,000
	Total Opinion of Probable Allied Cost				**$114,000**
	TOTAL ESTIMATED PROJECT COST (ROUNDED UP TO NEAREST $1,000)				**$565,000**

Assumptions, Notes

1. Import backfill assumed to be 100%
2. Foundation Gravel assumed to be 100% imported
3. Mobilization assumed to be 10% of construction costs
4. Temporary Erosion Control assumed to be 6% of construction costs
5. Pipe costs includes all excavation, pipe, fittings, bedding, imported backfill, and haul
6. Traffic Control assumed to be 2% of construction costs
7. General Restoration assumed to be 2% of construction costs
8. Costs are in 2024 dollars

The opinion of probable cost herein is based on our perception of current conditions at the project location. This opinion reflects our professional opinion of costs at this time and is subject to change as the project design progresses. BHC Consultants has no control over variances in the cost of labor, materials, equipment; nor services provided by others, contractor's means and methods of executing the work or of determining prices, competitive bidding or market conditions, practices or bidding strategies. BHC Consultants cannot and does not warrant or guarantee that proposals, bids, or actual construction costs will not vary from the costs presented as shown.

Capital Improvement Plan
Planning Level Opinion of Probable Project Costs

SW-16 Oil Water Separator Vault near Seventh-day Adventist Church

Prepared by: C.Yeh-Tinetti
Reviewed by: C.Talich

Bid Item No.	Bid Item Description	Unit Bid Price	Quantity	Unit	Total
1	Mobilization	$3,600	1	LS	$3,600
2	Temporary Erosion & Sediment Control	$800	1	LS	$800
3	Dewatering	$500	1	LS	$500
4	Oil Water Separator (96 GPM)	$34,509	1	EA	$34,509
5	Delivery to Monroe	$150	1	EA	$150
6	Traffic Control	$800	1	LS	$800
7	General Restoration	$1,100	1	LS	$1,100
	Construction Costs Subtotal				**$41,459**
	Construction Contingency	30%			$12,438
	Sales Tax	9.4%			$5,066
	Total Opinion of Probable Construction Cost				**$59,000**
	Allied Costs				
	Planning	5%			$3,000
	Design and Permitting	5%			$3,000
	Services During Construction	5%			$3,000
	Total Opinion of Probable Allied Cost				**$9,000**
	TOTAL ESTIMATED PROJECT COST (ROUNDED UP TO NEAREST $1,000)				**$68,000**

Assumptions, Notes

1. Import backfill assumed to be 100%
2. Foundation Gravel assumed to be 100% imported
3. Mobilization assumed to be 10% of construction costs
4. Temporary Erosion Control assumed to be 6% of construction costs
5. Pipe costs includes all excavation, pipe, fittings, bedding, imported backfill, and haul
6. Traffic Control assumed to be 2% of construction costs
7. General Restoration assumed to be 2% of construction costs
8. Costs are in 2024 dollars

The opinion of probable cost herein is based on our perception of current conditions at the project location. This opinion reflects our professional opinion of costs at this time and is subject to change as the project design progresses. BHC Consultants has no control over variances in the cost of labor, materials, equipment; nor services provided by others, contractor's means and methods of executing the work or of determining prices, competitive bidding or market conditions, practices or bidding strategies. BHC Consultants cannot and does not warrant or guarantee that proposals, bids, or actual construction costs will not vary from the costs presented as shown.

Appendix SW-C

SEPA Checklist

THIS PAGE INTENTIONALLY BLANK

SEPA[1] Environmental Checklist

Purpose of checklist

Governmental agencies use this checklist to help determine whether the environmental impacts of your proposal are significant. This information is also helpful to determine if available avoidance, minimization, or compensatory mitigation measures will address the probable significant impacts or if an environmental impact statement will be prepared to further analyze the proposal.

Instructions for applicants

This environmental checklist asks you to describe some basic information about your proposal. Please answer each question accurately and carefully, to the best of your knowledge. You may need to consult with an agency specialist or private consultant for some questions. **You may use "not applicable" or "does not apply" only when you can explain why it does not apply and not when the answer is unknown.** You may also attach or incorporate by reference additional studies reports. Complete and accurate answers to these questions often avoid delays with the SEPA process as well as later in the decision-making process.

The checklist questions apply to **all parts of your proposal**, even if you plan to do them over a period of time or on different parcels of land. Attach any additional information that will help describe your proposal or its environmental effects. The agency to which you submit this checklist may ask you to explain your answers or provide additional information reasonably related to determining if there may be significant adverse impact.

Instructions for lead agencies

Please adjust the format of this template as needed. Additional information may be necessary to evaluate the existing environment, all interrelated aspects of the proposal and an analysis of adverse impacts. The checklist is considered the first but not necessarily the only source of information needed to make an adequate threshold determination. Once a threshold determination is made, the lead agency is responsible for the completeness and accuracy of the checklist and other supporting documents.

Use of checklist for nonproject proposals

For nonproject proposals (such as ordinances, regulations, plans and programs), complete the applicable parts of sections A and B, plus the Supplemental Sheet for Nonproject Actions (Part D). Please completely answer all questions that apply and note that the words "project," "applicant," and "property or site" should be read as "proposal," "proponent," and "affected geographic area," respectively. The lead agency may exclude (for non-projects) questions in "Part B: Environmental Elements" that do not contribute meaningfully to the analysis of the proposal.

[1] https://ecology.wa.gov/Regulations-Permits/SEPA/Environmental-review/SEPA-guidance/Checklist-guidance

A.Background

Find help answering background questions[2]

1. **Name of proposed project, if applicable:**

   City of Monroe - Utility System Plan (Water, Sewer, Storm)

2. **Name of applicant:**

   City of Monroe, Public Works Department

3. **Address and phone number of applicant and contact person:**

   806 W. Main St, Monroe, WA 98272

4. **Date checklist prepared:**

   9/9/24

5. **Agency requesting checklist:**

   City of Monroe

6. **Proposed timing of schedule (including phasing, if applicable):**

   Proposed adoption date is winter 2024

7. **Do you have any plans for future additions, expansion, or further activity related to or connected with this proposal? If yes, explain.**

   Yes, the plan recommends individual projects for the implementation of the Utility System Plan. These projects will likely require additional environmental analysis.

8. **List any environmental information you know about that has been prepared, or will be prepared, directly related to this proposal.**

   Monroe 2044 SEIS and 2015 EIS. Projects associated with the Utility System Plan will likely require additional environmental analysis.

9. **Do you know whether applications are pending for governmental approvals of other proposals directly affecting the property covered by your proposal? If yes, explain.**

   No

10. **List any government approvals or permits that will be needed for your proposal, if known.**

    This item will require approval by the City Council

11. **Give brief, complete description of your proposal, including the proposed uses and the size of the project and site. There are several questions later in this checklist that ask you to describe certain aspects of your proposal. You do not need to repeat those answers on this page. (Lead agencies may modify this form to include additional specific information on project description.)**

[2] https://ecology.wa.gov/Regulations-Permits/SEPA/Environmental-review/SEPA-guidance/SEPA-checklist-guidance/SEPA-Checklist-Section-A-Background

The 2024 Utility System Plan is a non-project action that provides a strategic framework for the long-term development, maintenance, and enhancement of essential infrastructure systems. The plan addresses critical needs in water distribution, wastewater collection, and stormwater management to support the growing community. It identifies both physical infrastructure projects, such as pipeline expansions, facility upgrades, and flood mitigation measures, and programmatic initiatives aimed at improving system efficiency, sustainability, and resilience. This comprehensive plan ensures that future investments align with community growth, environmental stewardship, and regulatory compliance staffing needs, while promoting the safe, reliable, and cost-effective delivery of utility services.

12. **Location of the proposal. Give sufficient information for a person to understand the precise location of your proposed project, including a street address, if any, and section, township, and range, if known. If a proposal would occur over a range of area, provide the range or boundaries of the site(s). Provide a legal description, site plan, vicinity map, and topographic map, if reasonably available. While you should submit any plans required by the agency, you are not required to duplicate maps or detailed plans submitted with any permit applications related to this checklist.**

    Projects will take place throughout the City of Monroe. See plan for specific locations.

B.Environmental Elements

1. Earth

Find help answering earth questions[3]

a. **General description of the site:**

    The proposal is a nonproject action. The area covered by the CFP includes flat, gently rolling and hilly terrain, with some steep slopes.

Circle or highlight one: Flat, rolling, hilly, steep slopes, mountainous, other:

b. **What is the steepest slope on the site (approximate percent slope)?**

    The proposal is a nonproject action. Slopes will be addressed under the environmental review for each capital project proposed within the Utility System Plan as they are developed.

c. **What general types of soils are found on the site (for example, clay, sand, gravel, peat, muck)? If you know the classification of agricultural soils, specify them, and note any agricultural land of long-term commercial significance and whether the proposal results in removing any of these soils.**

[3] https://ecology.wa.gov/regulations-permits/sepa/environmental-review/sepa-guidance/sepa-checklist-guidance/sepa-checklist-section-b-environmental-elements/environmental-elements-earth

The proposal is a nonproject action. Sensitive soils and their functions will be addressed under the environmental review for each capital project proposed within the Master Plan as they are developed.

d. Are there surface indications or history of unstable soils in the immediate vicinity? If so, describe.

The proposal is a nonproject action. Soil stability will be assessed on an individual project basis through the SEPA review process and through the local grading permit process as each capital project is developed.

e. Describe the purpose, type, total area, and approximate quantities and total affected area of any filling, excavation, and grading proposed. Indicate source of fill.

The proposal is a nonproject action. Grading and filling requirements will be assessed on an individual project basis through the SEPA review process and through the local grading permit process as each capital project is developed.

f. Could erosion occur because of clearing, construction, or use? If so, generally describe.

The proposal is a nonproject action. Erosion would not occur as a result of the adoption of the Utility System Plan. Capital projects proposed within the Utility System Plan may potentially cause some erosion during construction. This potential is intensified on steeper embankments and slopes. Timing and phasing of construction, the amount of vegetation removed, the effectiveness of erosion control measures, and weather conditions will be evaluated during planning and permitting for each capital project, and will be addressed on a per project basis under environmental review as well.

g. About what percent of the site will be covered with impervious surfaces after project construction (for example, asphalt or buildings)?

The proposal is a nonproject action. Impervious surfaces will not result from the adoption of the Utility System Plan, though capital projects proposed within the plan would result in small quantities of increased impervious surface.

h. Proposed measures to reduce or control erosion, or other impacts to the earth, if any.

The proposal is a nonproject action. As each capital project is planned, a temporary erosion and sedimentation control plan would be developed as part of the construction plans to minimize erosion and contain sediment during construction. Erosion and sedimentation control measures may include vegetation retention, temporary and permanent seeding, erosion control fabrics, fabric filter fences, gravel berms, and other BMPs as described in the Stormwater Management manual for Western Washington Monitoring and maintenance of such control measures would be conducted throughout construction to ensure proper performance

2. Air

Find help answering air questions[4]

a. What types of emissions to the air would result from the proposal during construction, operation, and maintenance when the project is completed? If any, generally describe and give approximate quantities if known.

The proposal is a nonproject action. Development of the proposed capital projections described within the Utility System Plan will require an analysis of emissions on a per-project basis. These emissions will be quantified during the planning and permitting stages of each capital project.

b. Are there any off-site sources of emissions or odor that may affect your proposal? If so, generally describe.

Not applicable. The proposal is a nonproject action.

c. Proposed measures to reduce or control emissions or other impacts to air, if any:

Not applicable. The proposal is a nonproject action.

3. Water

Find help answering water questions[5]

a. Surface:

Find help answering surface water questions[6]

1. Is there any surface water body on or in the immediate vicinity of the site (including year-round and seasonal streams, saltwater, lakes, ponds, wetlands)? If yes, describe type and provide names. If appropriate, state what stream or river it flows into.

The proposal is a nonproject action. Some projects proposed in the Utility System Plan are located in the immediate vicinity of a waterbody. However, specific plans for these and other proposed improvements have yet to be developed. A project specific environmental review and any necessary Critical Areas, Floodplains or

[4] https://ecology.wa.gov/Regulations-Permits/SEPA/Environmental-review/SEPA-guidance/SEPA-checklist-guidance/SEPA-Checklist-Section-B-Environmental-elements/Environmental-elements-Air
[5] https://ecology.wa.gov/Regulations-Permits/SEPA/Environmental-review/SEPA-guidance/SEPA-checklist-guidance/SEPA-Checklist-Section-B-Environmental-elements/Environmental-elements-3-Water
[6] https://ecology.wa.gov/Regulations-Permits/SEPA/Environmental-review/SEPA-guidance/SEPA-checklist-guidance/SEPA-Checklist-Section-B-Environmental-elements/Environmental-elements-3-Water/Environmental-elements-Surface-water

Shoreline Management permitting will precede construction of each project action described in the Master Plan.

2. **Will the project require any work over, in, or adjacent to (within 200 feet) the described waters? If yes, please describe and attach available plans.**

   The proposal is a nonproject action and adoption of the Utility System Plan will not require work near or in water.

   The proposed projects within the Master Plan may be located within 200 feet of the waters described above. However, specific plans for these and other proposed improvements have yet to be developed. A project specific environmental review and any necessary Critical Areas, Floodplains or Shoreline Management permitting will precede construction of each project action described in the Master Plan.

3. **Estimate the amount of fill and dredge material that would be placed in or removed from surface water or wetlands and indicate the area of the site that would be affected. Indicate the source of fill material.**

   These impacts are not anticipated under this nonproject action.

4. **Will the proposal require surface water withdrawals or diversions? Give a general description, purpose, and approximate quantities if known.**

   The proposal is a nonproject action. Proposed projects within the Utility System Plan would not require surface water withdrawals or diversions. Any project impacts to stormwater will be mitigated with BMPs and analyzed at project specific level.

5. **Does the proposal lie within a 100-year floodplain? If so, note location on the site plan.**

   The proposal is a nonproject action. However, portions of proposed future improvements may lie within the 100-year floodplain. A definitive determination of floodplain proximity, together with a project specific environmental review, will be developed prior to implementation of all capital projects and improvements.

6. **Does the proposal involve any discharges of waste materials to surface waters? If so, describe the type of waste and anticipated volume of discharge.**

   The proposal is a nonproject action. It is not anticipated the projects identified in the Utility System Plan will required the discharges of waste materials to surface waters.

b. Ground:

Find help answering ground water questions[7]

1. **Will groundwater be withdrawn from a well for drinking water or other purposes? If so, give a general description of the well, proposed uses and approximate quantities withdrawn from the well. Will water be discharged to groundwater? Give a general description, purpose, and approximate quantities if known.**

[7] https://ecology.wa.gov/Regulations-Permits/SEPA/Environmental-review/SEPA-guidance/SEPA-checklist-guidance/SEPA-Checklist-Section-B-Environmental-elements/Environmental-elements-3-Water/Environmental-elements-Groundwater

The proposal is a nonproject action. Any expected water discharge that comes up during project design will be permitted and conditioned under a project specific environmental review.

2. **Describe waste material that will be discharged into the ground from septic tanks or other sources, if any (domestic sewage; industrial, containing the following chemicals…; agricultural; etc.). Describe the general size of the system, the number of such systems, the number of houses to be served (if applicable), or the number of animals or humans the system(s) are expected to serve.**

   The proposal is a nonproject action. The identified projects do not anticipate discharging waste material into the ground.

c. Water Runoff (including stormwater):

1. **Describe the source of runoff (including storm water) and method of collection and disposal, if any (include quantities, if known). Where will this water flow? Will this water flow into other waters? If so, describe.**

   The proposal is a nonproject action. Capital projects proposed within the Utility Master Plan would result in construction runoff as well as runoff from the roofs of completed reservoirs and other structures. Each project action proposed within the Utility System Plan will require runoff controls prescribed by local permit requirements and project specific environmental review.

2. **Could waste materials enter ground or surface waters? If so, generally describe.**

   The proposal is a nonproject action and not anticipated with the proposed projects.

3. **Does the proposal alter or otherwise affect drainage patterns in the vicinity of the site? If so, describe.**

   The proposal is a nonproject action. Each project action proposed within the Utility System Plan will be evaluated for any effects to site drainage during predesign and permitting.

d. Proposed measures to reduce or control surface, ground, and runoff water, and drainage pattern impacts, if any:

The proposal is a nonproject action. Project actions as proposed within the Utility System Plan will adhere to standard construction practices (temporary erosion and sedimentation controls) as required by the City of Monroe.

4. Plants

Find help answering plants questions

a. Check the types of vegetation found on the site:

☒ **deciduous tree: alder, maple, aspen, other**

☒ **evergreen tree: fir, cedar, pine, other**

☒ **shrubs**

☒ **grass**

☒ **pasture**

☐ **crop or grain**

☐ **orchards, vineyards, or other permanent crops.**

☒ **wet soil plants: cattail, buttercup, bullrush, skunk cabbage, other**

☒ **water plants: water lily, eelgrass, milfoil, other**

☐ **other types of vegetation**

b. What kind and amount of vegetation will be removed or altered?

The proposal is a nonproject action. As a result of proposed capital projects and system improvements proposed in the Utility System Plan, grasses, native shrubs, and some trees in the vicinity of facility construction activities and other land disturbing work would be disrupted or removed.

c. List threatened and endangered species known to be on or near the site.

The proposal is a nonproject action. Threatened and endangered species and their habitats will be protected as each project is planned and permitted under individual environmental review and local permitting processes for each capital improvement project proposal and system improvement project.

d. Proposed landscaping, use of native plants, or other measures to preserve or enhance vegetation on the site, if any.

The proposal is a nonproject action. Erosion control in areas of disrupted vegetation will be provided during construction. Revegetation will take place following construction.

e. List all noxious weeds and invasive species known to be on or near the site.

The proposal is a nonproject action. This will be reviewed at a project level. All invasive species will be handled in accordance with the applicable State regulations.

5. Animals

Find help answering animal questions[8]

a. List any birds and other animals that have been observed on or near the site or are known to be on or near the site.

Examples include:

- **Birds: hawk, heron, eagle, songbirds, other:**
- **Mammals: deer, bear, elk, beaver, other:**
- **Fish: bass, salmon, trout, herring, shellfish, other:**

[8] https://ecology.wa.gov/Regulations-Permits/SEPA/Environmental-review/SEPA-guidance/SEPA-checklist-guidance/SEPA-Checklist-Section-B-Environmental-elements/Environmental-elements-5-Animals

b. List any threatened and endangered species known to be on or near the site.

The proposal is a nonproject action. Threatened and endangered species and their habitats will be protected as each project is planned and permitted under individual environmental review and local permitting processes for each capital improvement project proposal and system improvement project.

c. Is the site part of a migration route? If so, explain.

This is a nonproject action. The capital projects and system improvement proposed within the Utility System Plan could result in impacts to various sites throughout the service area where those projects are proposed. The Skykomish River is part of the Puget Sound Basin, which is included in the Pacific flyway. Larger mammals migrate between higher and lower elevations, seasonally, through portions of the City of Monroe and its water service area. The Skykomish and Woods Creek area are conduits for the migration of a number of anadromous fish species.

d. Proposed measures to preserve or enhance wildlife, if any.

The proposal is a nonproject action. Although significant wildlife and habitat impacts are not anticipated, specific mitigation measures will be developed within the early design and planning stages for each proposed capital project and in response to resource agency concerns associated with the implementation of each capital project and system improvement proposed within the Utility System Plan.

e. List any invasive animal species known to be on or near the site.

The proposal is a nonproject action. The capital projects and system improvement proposed within the Utility System Plan could result in impacts to various sites throughout the service area where those projects are proposed. Any invasive species discovered during pre-design or surveying for projects included in the Utility System Plan will be included in the project environmental analyses.

6. Energy and natural resources

Find help answering energy and natural resource questions[9]

a. What kinds of energy (electric, natural gas, oil, wood stove, solar) will be used to meet the completed project's energy needs? Describe whether it will be used for heating, manufacturing, etc.

The proposal is a nonproject action. Energy would be required for the construction of any proposed system improvement or capital project and would principally include diesel and gasoline fuel used by construction vehicles and equipment, and by workers accessing construction sites. Pump station facilities and improvements will require increased electricity, and possibly other energy sources, for operation.

[9] https://ecology.wa.gov/Regulations-Permits/SEPA/Environmental-review/SEPA-guidance/SEPA-checklist-guidance/SEPA-Checklist-Section-B-Environmental-elements/Environmental-elements-6-Energy-natural-resou

b. Would your project affect the potential use of solar energy by adjacent properties? If so, generally describe.

No, the proposed projects are at or near existing grade.

c. What kinds of energy conservation features are included in the plans of this proposal? List other proposed measures to reduce or control energy impacts, if any.

The Utility System Plan promotes multimodal transportation and is intended to reduce the energy needs typically associated with transportation.

7. Environmental health

Health Find help with answering environmental health questions[10]

a. Are there any environmental health hazards, including exposure to toxic chemicals, risk of fire and explosion, spill, or hazardous waste, that could occur because of this proposal? If so, describe.

The proposal is a nonproject action. Implementation of the proposed projects within the Utility System Plan could result in some environmental health hazards common to construction projects. The potential for spills of fuel, oil, lubricants, solvents, disinfecting agents or concrete additives used during construction has the potential to impact human health and damage natural resources. Best Management Practices (BMPs) will be followed in all cases, and appropriate hazard plans and chemical handling procedures specific to each site, compound and project will be followed.

1. **Describe any known or possible contamination at the site from present or past uses.**

   The proposal is a nonproject action. This does not apply.

2. **Describe existing hazardous chemicals/conditions that might affect project development and design. This includes underground hazardous liquid and gas transmission pipelines located within the project area and in the vicinity.**

   The proposal is a nonproject action. This does not apply.

3. **Describe any toxic or hazardous chemicals that might be stored, used, or produced during the project's development or construction, or at any time during the operating life of the project.**

   The proposal is a nonproject action. This does not apply.

4. **Describe special emergency services that might be required.**

   The proposal is a nonproject action. This does not apply.

5. **Proposed measures to reduce or control environmental health hazards, if any.**

   The proposal is a nonproject action. This does not apply.

b. Noise

[10] https://ecology.wa.gov/Regulations-Permits/SEPA/Environmental-review/SEPA-guidance/SEPA-checklist-guidance/SEPA-Checklist-Section-B-Environmental-elements/Environmental-elements-7-Environmental-health

1. **What types of noise exist in the area which may affect your project (for example: traffic, equipment, operation, other)?**

   The proposal is a nonproject action. This does not apply.

2. **What types and levels of noise would be created by or associated with the project on a short-term or a long-term basis (for example: traffic, construction, operation, other)? Indicate what hours noise would come from the site)?**

   The proposal is a nonproject action. Construction activities associated with the implementation of the CFP would generate short-term noise during the construction period. Potential impacts from project specific noise would be evaluated and mitigated with appropriate BMPs.

3. **Proposed measures to reduce or control noise impacts, if any:**

   The proposal is a nonproject action. This does not apply.

8. Land and shoreline use

Find help answering land and shoreline use questions[11]

a. **What is the current use of the site and adjacent properties? Will the proposal affect current land uses on nearby or adjacent properties? If so, describe.**

   The proposal is a nonproject action. The land uses which exist in the project area include a broad range of residential, commercial, industrial, agricultural, open space, and public uses.

b. **Has the project site been used as working farmlands or working forest lands? If so, describe. How much agricultural or forest land of long-term commercial significance will be converted to other uses because of the proposal, if any? If resource lands have not been designated, how many acres in farmland or forest land tax status will be converted to nonfarm or nonforest use?**

   The proposal is a nonproject action. This does not apply.

   1. **Will the proposal affect or be affected by surrounding working farm or forest land normal business operations, such as oversize equipment access, the application of pesticides, tilling, and harvesting? If so, how?**

      The proposal is a nonproject action. This does not apply.

c. **Describe any structures on the site.**

   The proposal is a nonproject action. This does not apply.

d. **Will any structures be demolished? If so, what?**

   The proposal is a nonproject action. This does not apply.

e. **What is the current zoning classification of the site?**

[11] https://ecology.wa.gov/Regulations-Permits/SEPA/Environmental-review/SEPA-guidance/SEPA-checklist-guidance/SEPA-Checklist-Section-B-Environmental-elements/Environmental-elements-8-Land-shoreline-use

The proposal is a nonproject action. This does not apply.

f. What is the current comprehensive plan designation of the site?

The proposal is a nonproject action. This does not apply.

g. If applicable, what is the current shoreline master program designation of the site?

The proposal is a nonproject action. This does not apply.

h. Has any part of the site been classified as a critical area by the city or county? If so, specify.

The proposal is a nonproject action. This does not apply.

i. Approximately how many people would reside or work in the completed project?

The proposal is a nonproject action. This does not apply.

j. Approximately how many people would the completed project displace?

The proposal is a nonproject action. This does not apply.

k. Proposed measures to avoid or reduce displacement impacts, if any.

The proposal is a nonproject action. This does not apply.

l. Proposed measures to ensure the proposal is compatible with existing and projected land uses and plans, if any.

The proposed projects within the Utility System Plan were reviewed for consistency with the existing and projected land uses and plans. No conflicts were noted during the development of the Utility System Plan.

m. Proposed measures to reduce or control impacts to agricultural and forest lands of long-term commercial significance, if any:

None, the Utility System Plan does not identify potential impacts to agricultural and forest lands.

9. Housing

Find help answering housing questions[12]

a. Approximately how many units would be provided, if any? Indicate whether high, middle, or low-income housing.

None, the Plan does not add or remove any units.

b. Approximately how many units, if any, would be eliminated? Indicate whether high, middle, or low-income housing.

None, the Plan does not add or remove any units.

c. Proposed measures to reduce or control housing impacts, if any:

[12] https://ecology.wa.gov/Regulations-Permits/SEPA/Environmental-review/SEPA-guidance/SEPA-checklist-guidance/SEPA-Checklist-Section-B-Environmental-elements/Environmental-elements-9-Housing

None, the Plan does not add or remove any units.

10. Aesthetics

Find help answering aesthetics questions[13]

a. What is the tallest height of any proposed structure(s), not including antennas; what is the principal exterior building material(s) proposed?

The majority of the improvements are below ground (i.e. water, sewer, storm pipes) at or slightly above grade.

b. What views in the immediate vicinity would be altered or obstructed?

None

c. Proposed measures to reduce or control aesthetic impacts, if any:

None are identified at this time.

11. Light and glare

Find help answering light and glare questions[14]

a. What type of light or glare will the proposal produce? What time of day would it mainly occur?

No lighting is proposed at this time.

b. Could light or glare from the finished project be a safety hazard or interfere with views?

N/A

c. What existing off-site sources of light or glare may affect your proposal?

Nothing has been identified.

d. Proposed measures to reduce or control light and glare impacts, if any:

None needed at this time.

12. Recreation

Find help answering recreation questions

a. What designated and informal recreational opportunities are in the immediate vicinity?

The Utility System Plan is a nonproject action that does not directly create or modify recreational opportunities. However, utility infrastructure projects may be located near designated and informal recreational areas.

b. Would the proposed project displace any existing recreational uses? If so, describe.

[13] https://ecology.wa.gov/Regulations-Permits/SEPA/Environmental-review/SEPA-guidance/SEPA-checklist-guidance/SEPA-Checklist-Section-B-Environmental-elements/Environmental-elements-10-Aesthetics
[14] https://ecology.wa.gov/Regulations-Permits/SEPA/Environmental-review/SEPA-guidance/SEPA-checklist-guidance/SEPA-Checklist-Section-B-Environmental-elements/Environmental-elements-11-Light-glare

No, it would enhance recreational opportunities.

c. Proposed measures to reduce or control impacts on recreation, including recreation opportunities to be provided by the project or applicant, if any:

No impacts are identified.

13. Historic and cultural preservation

Find help answering historic and cultural preservation questions[15]

a. Are there any buildings, structures, or sites, located on or near the site that are over 45 years old listed in or eligible for listing in national, state, or local preservation registers? If so, specifically describe.

The proposal is a nonproject action. No historical or cultural resources are known to exist on or next to the sites of proposed system improvements or capital projects. Prior to any construction, inquiries will be made into County records and to the Washington State Office of Archaeology and Historic Preservation (OAHP) regarding the presence of any known cultural resources.

b. Are there any landmarks, features, or other evidence of Indian or historic use or occupation? This may include human burials or old cemeteries. Are there any material evidence, artifacts, or areas of cultural importance on or near the site? Please list any professional studies conducted at the site to identify such resources.

The proposal is a nonproject action. None are known to exist at the sites of potential improvements. Appropriate records searches and surveys will be made before earth moving equipment is engaged.

c. Describe the methods used to assess the potential impacts to cultural and historic resources on or near the project site. Examples include consultation with tribes and the department of archeology and historic preservation, archaeological surveys, historic maps, GIS data, etc.

The proposal is a nonproject action. During pre-design for each project, efforts will include consultation with tribes and the department of archeology and historic preservation, review of historic maps and GIS data, and site surveying

d. Proposed measures to avoid, minimize, or compensate for loss, changes to, and disturbance to resources. Please include plans for the above and any permits that may be required.

The proposal is a nonproject action. In addition to cultural resource studies, any evidence of historic or cultural resources is encountered during construction or installation of any work proposed within the Utility System Plan, all work would be halted in the area and a state-approved archaeologist/historian would be engaged to investigate, evaluate and/or move or curate such resources, as appropriate.

[15] https://ecology.wa.gov/Regulations-Permits/SEPA/Environmental-review/SEPA-guidance/SEPA-checklist-guidance/SEPA-Checklist-Section-B-Environmental-elements/Environmental-elements-13-Historic-cultural-p

14. Transportation

Find help with answering transportation questions[16]

a. Identify public streets and highways serving the site or affected geographic area and describe proposed access to the existing street system. Show on site plans, if any.

The proposal is a nonproject action. This does not apply.

b. Is the site or affected geographic area currently served by public transit? If so, generally describe. If not, what is the approximate distance to the nearest transit stop?

The proposal is a nonproject action. This does not apply.

Will the proposal require any new or improvements to existing roads, streets, pedestrian, bicycle, or state transportation facilities, not including driveways? If so, generally describe (indicate whether public or private).

The proposal, as a Utility System Plan, does not directly mandate new roads, streets, pedestrian, bicycle, or state transportation facilities. However, certain capital utility projects, such as the installation or replacement of water, sewer, and stormwater infrastructure, may necessitate temporary improvements or modifications to existing roads or sidewalks to facilitate construction activities. These improvements are typically short-term and occur within the public right-of-way.

In some cases, coordination with transportation agencies may be required for more extensive projects, such as utility expansions that coincide with roadway or pedestrian improvements. For example, trenching or pipe replacement could impact public roads, and may involve resurfacing or reconfiguring parts of the street or sidewalk following utility work. Additionally, utility projects may align with larger transportation goals, such as incorporating green stormwater infrastructure into road designs or improving drainage in flood-prone areas. Any such improvements would be public and designed to enhance both utility and transportation systems.

c. Will the project or proposal use (or occur in the immediate vicinity of) water, rail, or air transportation? If so, generally describe.

The proposal is a nonproject action. This does not apply.

d. How many vehicular trips per day would be generated by the completed project or proposal? If known, indicate when peak volumes would occur and what percentage of the volume would be trucks (such as commercial and nonpassenger vehicles). What data or transportation models were used to make these estimates?

The proposal is a nonproject action. This does not apply.

e. Will the proposal interfere with, affect, or be affected by the movement of agricultural and forest products on roads or streets in the area? If so, generally describe.

[16] https://ecology.wa.gov/Regulations-Permits/SEPA/Environmental-review/SEPA-guidance/SEPA-checklist-guidance/SEPA-Checklist-Section-B-Environmental-elements/Environmental-elements-14-Transportation

The proposal is a nonproject action. This does not apply.

f. Proposed measures to reduce or control transportation impacts, if any:

The proposal is a nonproject action. This does not apply.

15. Public services

Find help answering public service questions[17]

a. Would the project result in an increased need for public services (for example: fire protection, police protection, public transit, health care, schools, other)? If so, generally describe.

The proposal is a nonproject action. This does not apply.

b. Proposed measures to reduce or control direct impacts on public services, if any.

The proposal is a nonproject action. This does not apply.

16. Utilities

Find help answering utilities questions[18]

a. Circle utilities currently available at the site: electricity, natural gas, water, refuse service, telephone, sanitary sewer, septic system, other:

The proposal is a nonproject action. This does not apply.

b. Describe the utilities that are proposed for the project, the utility providing the service, and the general construction activities on the site or in the immediate vicinity which might be needed.

The proposal is a nonproject action. This does not apply.

C.Signature

Find help about who should sign[19]

The above answers are true and complete to the best of my knowledge. I understand that the lead agency is relying on them to make its decision.

X Jordan Ottow

Type name of signee:

Jordan Ottow

[17] https://ecology.wa.gov/regulations-permits/sepa/environmental-review/sepa-guidance/sepa-checklist-guidance/sepa-checklist-section-b-environmental-elements/environmental-elements-15-public-services
[18] https://ecology.wa.gov/regulations-permits/sepa/environmental-review/sepa-guidance/sepa-checklist-guidance/sepa-checklist-section-b-environmental-elements/environmental-elements-16-utilities
[19] https://ecology.wa.gov/Regulations-Permits/SEPA/Environmental-review/SEPA-guidance/SEPA-checklist-guidance/SEPA-Checklist-Section-C-Signature

Position and agency/organization: Public Works, Operations Manager/City of Monroe

Date submitted:

D.Supplemental sheet for nonproject actions

Find help for the nonproject actions worksheet[20]

Do not use this section for project actions.

Because these questions are very general, it may be helpful to read them in conjunction with the list of the elements of the environment.

When answering these questions, be aware of the extent the proposal, or the types of activities likely to result from the proposal, would affect the item at a greater intensity or at a faster rate than if the proposal were not implemented. Respond briefly and in general terms.

1. **How would the proposal be likely to increase discharge to water; emissions to air; production, storage, or release of toxic or hazardous substances; or production of noise?**

   The proposal, as a nonproject Utility System Plan, is not expected to directly increase discharges to water, emissions to air, the production or release of toxic or hazardous substances, or the production of noise. However, individual capital utility projects identified within the plan could have temporary construction-related impacts during their implementation.

   Discharge to Water: Projects that improve water and sewer infrastructure may involve temporary increases in stormwater runoff during construction activities, especially if soil is disturbed. However, long-term impacts are likely to be positive, as stormwater management improvements, including upgrades to drainage systems, green infrastructure, and treatment facilities, are intended to reduce the risk of flooding and improve water quality.

   Emissions to Air: Temporary increases in emissions may occur during construction due to the use of heavy machinery and vehicles. These impacts would be localized and short-term, with mitigation measures such as dust control and efficient equipment use to minimize air quality impacts.

   Toxic or Hazardous Substances: The plan itself does not involve the production or release of hazardous substances. However, utility projects that involve the replacement or repair of aging infrastructure could potentially encounter and manage hazardous materials, such as asbestos in old pipes or contaminated soils. Any such materials would be handled in accordance with regulatory standards to ensure safety and environmental protection.

   Production of Noise: Noise impacts are also expected to be temporary and limited to construction phases. Typical sources would include machinery, excavation, and

[20] https://ecology.wa.gov/regulations-permits/sepa/environmental-review/sepa-guidance/sepa-checklist-guidance/sepa-checklist-section-d-non-project-actions

transportation of materials. These activities would comply with local noise ordinances and best practices to minimize disruption to surrounding communities.

In the long term, the projects identified in the plan are designed to enhance environmental sustainability by improving water and wastewater treatment and reducing the likelihood of pollution from stormwater runoff or sewer overflows.

- **Proposed measures to avoid or reduce such increases are:**

  The water runoff from the increase in impervious surface will be treated in accordance with the WW Stormwater Manual

2. How would the proposal be likely to affect plants, animals, fish, or marine life?

Adverse impacts on plants, animals, fish, or marine life are not anticipated as part of the implementation of the Utility System Plan. The majority of proposed work would take place within existing, improved ROW. Those that are not within these areas will undergo a individual assessment prior to construction.

- **Proposed measures to protect or conserve plants, animals, fish, or marine life are:**

  None needed in association with the Utility System Plan.

3. How would the proposal be likely to deplete energy or natural resources?

Not likely.

- **Proposed measures to protect or conserve energy and natural resources are:**

Energy Efficiency in Infrastructure: New and upgraded utility infrastructure (water, sewer, storm systems) will incorporate energy-efficient technologies and equipment. For example, high-efficiency pumps and motors can be installed in water and wastewater systems to reduce energy consumption. Automated monitoring systems can also be utilized to optimize energy use by detecting leaks or inefficiencies.

Sustainable Water Management: The plan promotes water conservation through improved infrastructure that reduces water loss from leaks in distribution systems. It may also include measures such as low-energy treatment processes, greywater reuse, and the promotion of water-efficient practices among consumers, reducing the demand for natural water resources.

Stormwater Management Practices: Incorporating green infrastructure, such as rain gardens, permeable pavements, and bioswales, can help manage stormwater in a way that conserves natural resources. These measures reduce the need for energy-intensive stormwater pumping and treatment while promoting natural groundwater recharge.

Renewable Energy Options: Where feasible, the plan may encourage the use of renewable energy sources, such as solar panels for water treatment facilities, to reduce reliance on non-renewable energy.

Lifecycle Sustainability: Selecting durable materials for pipelines, pumps, and other infrastructure will reduce the frequency of replacements, conserving the raw materials and energy required for ongoing repairs and rebuilds.

4. **How would the proposal be likely to use or affect environmentally sensitive areas or areas designated (or eligible or under study) for governmental protection, such as parks, wilderness, wild and scenic rivers, threatened or endangered species habitat, historic or cultural sites, wetlands, floodplains, or prime farmlands?**

It is a very low likelihood that any of the projects resulting from the Utility System Plan would negatively impact these areas.

- **Proposed measures to protect such resources or to avoid or reduce impacts are:**

  None needed in association with the Utility System Plan.

5. **How would the proposal be likely to affect land and shoreline use, including whether it would allow or encourage land or shoreline uses incompatible with existing plans?**

It is a very low likelihood that any of the projects resulting from the Utility System Plan would negatively impact these areas.

- **Proposed measures to avoid or reduce shoreline and land use impacts are:**

  Not applicable.

6. **How would the proposal be likely to increase demands on transportation or public services and utilities?**

   The Utility System Plan itself, as a nonproject action, is not expected to directly increase demands on transportation, public services, or utilities. However, individual capital projects identified in the plan, such as water, sewer, and stormwater infrastructure improvements, may temporarily impact these areas during their construction phases. Specifically:

- **Transportation**: Construction activities for utility upgrades (e.g., water main replacements, sewer line installations) may require temporary road closures, detours, or increased traffic congestion due to construction vehicles and equipment. This could increase short-term demand on transportation infrastructure, particularly around construction zones.
- **Public Services**: Utility work could require temporary coordination with public services, such as police and fire departments, to manage traffic control or provide emergency access during construction. In some cases, service disruptions (e.g., water shut-offs or detours) may also place temporary demands on public communication services to notify and manage impacts to the public.

- **Utilities**: During construction, there may be brief service interruptions or reductions in capacity for existing water, sewer, or storm systems. Additionally, improvements to infrastructure could increase the capacity for future development, leading to potential long-term increases in demand for utility services as population and development grow.

  - **Proposed measures to reduce or respond to such demand(s) are:**
  - Traffic and Transportation Management: Implement traffic control plans, including the use of detours, lane reductions, and scheduled work during off-peak hours to minimize disruptions to transportation. Clear signage and advance public notifications can help reduce the impact on local transportation networks.
  - Service Coordination: Work closely with public services (e.g., police, fire, emergency medical services) to ensure access to construction areas and affected neighborhoods. This includes ensuring that emergency vehicles can navigate construction zones and that service interruptions are minimized or planned during times of low impact.

    Utility Service Disruptions: Minimize service interruptions by planning and scheduling utility work during low-demand periods, providing advance notice to affected residents and businesses, and ensuring temporary services are available if required. Utility providers can coordinate with construction teams to ensure continuous service whenever possible.
  - Long-Term Utility Capacity Planning: The Utility System Plan is designed to address future growth and development, ensuring that improvements in water, sewer, and stormwater infrastructure can meet increased demands over time. By upgrading systems before they reach capacity, the plan proactively reduces future stress on utility services.

7. Identify, if possible, whether the proposal may conflict with local, state, or federal laws or requirements for the protection of the environment.

None

Water

Year 7 to Year 20 CIP								
	2024 Dollars				Future Dollars			
Year	Distribution	Equipment	Facility	Total	Distribution	Equipment	Facility	Total
2031	$ 2,996,000	$ 1,070,000	$ 214,000	$ 4,280,000	$ 3,668,000	$ 1,310,000	$ 262,000	$ 5,240,000
2032	$ 2,996,000	$ 1,070,000	$ 214,000	$ 4,280,000	$ 3,752,000	$ 1,340,000	$ 268,000	$ 5,360,000
2033	$ 2,996,000	$ 1,070,000	$ 214,000	$ 4,280,000	$ 3,843,000	$ 1,372,500	$ 274,500	$ 5,490,000
2034	$ 2,996,000	$ 1,070,000	$ 214,000	$ 4,280,000	$ 3,934,000	$ 1,405,000	$ 281,000	$ 5,620,000
2035	$ 2,996,000	$ 1,070,000	$ 214,000	$ 4,280,000	$ 4,032,000	$ 1,440,000	$ 288,000	$ 5,760,000
2036	$ 2,996,000	$ 1,070,000	$ 214,000	$ 4,280,000	$ 4,130,000	$ 1,475,000	$ 295,000	$ 5,900,000
2037	$ 2,996,000	$ 1,070,000	$ 214,000	$ 4,280,000	$ 4,228,000	$ 1,510,000	$ 302,000	$ 6,040,000
2038	$ 2,996,000	$ 1,070,000	$ 214,000	$ 4,280,000	$ 4,326,000	$ 1,545,000	$ 309,000	$ 6,180,000
2039	$ 2,996,000	$ 1,070,000	$ 214,000	$ 4,280,000	$ 4,431,000	$ 1,582,500	$ 316,500	$ 6,330,000
2040	$ 2,996,000	$ 1,070,000	$ 214,000	$ 4,280,000	$ 4,536,000	$ 1,620,000	$ 324,000	$ 6,480,000
2041	$ 2,996,000	$ 1,070,000	$ 214,000	$ 4,280,000	$ 4,648,000	$ 1,660,000	$ 332,000	$ 6,640,000
2042	$ 2,996,000	$ 1,070,000	$ 214,000	$ 4,280,000	$ 4,760,000	$ 1,700,000	$ 340,000	$ 6,800,000
2043	$ 2,996,000	$ 1,070,000	$ 214,000	$ 4,280,000	$ 4,872,000	$ 1,740,000	$ 348,000	$ 6,960,000
2044	$ 2,996,000	$ 1,070,000	$ 214,000	$ 4,280,000	$ 4,991,000	$ 1,782,500	$ 356,500	$ 7,130,000
Sum	$ 41,944,000	$ 14,980,000	$ 2,996,000	$ 59,920,000	$ 60,151,000	$ 21,482,500	$ 4,296,500	$ 85,930,000

Sewer

	CIP Projects	Project Estimate (2024)	Number of Years	Inflation Factor-6 year	6-year OPPC	Inflation Factor-20 year	20-year OPPC	2031	2032	2033	2034	2035	2036	2037	2038	2039	2040	2041	2042	2043	2044
SS-101	Future Pipe Replacement Project	$ 675,000	6	3%		2.4%		$ 830,000	$ 850,000	$ 870,000	$ 900,000	$ 920,000	$ 940,000	$ 960,000	$ 980,000	$1,010,000	$1,030,000	$1,060,000	$1,080,000	$1,110,000	$1,130,000
SS-102	Park Place Pump Station Upgrades	$ 1,283,100	6	3%	$ 1,540,000	2.4%	$2,150,000														$2,150,000
SS-103	South Freylands Pump Station Upgrades	$ 1,161,600	6	3%	$ 1,390,000	2.4%	$1,940,000														$1,940,000
SS-104	Beaton Pump Station Upgrades	$ 607,800	6	3%	$ 730,000	2.4%	$1,020,000														$1,020,000
SS-105	Admin Building Replacement or Upgrades	$ 2,224,000	6	3%	$ 2,660,000	2.4%	$3,380,000										$3,380,000				
SS-106	Centrifugal Blower Replacement	$ 409,000	6	3%	$ 490,000	2.4%	$ 560,000					$ 560,000									
SS-107	Future WWTP projects	$ 433,000	6	3%		2.4%		$ 540,000	$ 550,000	$ 560,000	$ 580,000	$ 590,000	$ 600,000	$ 620,000	$ 630,000	$ 650,000	$ 660,000	$ 680,000	$ 700,000	$ 710,000	$ 730,000
	6-Year CIP																				
	20-Year CIP							$1,370,000	$1,400,000	$1,430,000	$1,480,000	$2,070,000	$1,540,000	$1,580,000	$1,610,000	$1,660,000	$5,070,000	$1,740,000	$1,780,000	$1,820,000	$6,970,000

Stormwater System (20-year Plan)																
	Fund	**2031**	**2032**	**2033**	**2034**	**2035**	**2036**	**2037**	**2038**	**2039**	**2040**	**2041**	**2042**	**2043**	**2044**	**TOTAL**
Tjerne Retention Pond Fencing	432	$0	$0	$0	$0	$0	$0	$0	$0	$0	$0	$0	$0	$0	$0	$ 75,353
Lake Tye Outfall Improvements	432	$0	$0	$0	$0	$0	$0	$0	$0	$0	$0	$0	$0	$0	$0	$ 225,478
Downtown Porous Concrete	432	$0	$0	$0	$0	$0	$0	$0	$0	$0	$0	$0	$0	$0	$0	$ 2,756,727
NPDES Required Capital Construction Facility Rehabilitation (SMAP)	432	$0	$0	$0	$0	$0	$0	$0	$0	$0	$0	$0	$0	$0	$0	$ 217,591
Lake Tye South Inlet	432	$0	$0	$0	$0	$0	$0	$0	$0	$0	$0	$0	$0	$0	$0	$ 969,297
Beaton Ditch	432	$0	$0	$0	$0	$0	$0	$0	$0	$0	$0	$0	$0	$0	$0	$ 1,347,806
Stormwater Retrofits - Filter Replacements	432	$0	$0	$0	$0	$0	$0	$0	$0	$0	$0	$0	$0	$0	$0	$ 109,860
Oil Water Separator Vault near Seventh-day Adventist Church	432	$0	$0	$0	$0	$0	$0	$0	$0	$0	$0	$0	$0	$0	$0	$ 76,535
Beaton Road / Industrial Park	432	$0	$0	$0	$0	$0	$0	$0	$0	$0	$0	$0	$0	$0	$0	$ 6,401,358
Park, Powell, Monroe, Roberts, & Kelsey Streets	432	$0	$0	$0	$0	$0	$0	$0	$0	$0	$0	$0	$0	$0	$0	$ 1,100,661
154th and 170th Avenue Pond	432	$781,552	$0	$0	$0	$0	$0	$0	$0	$0	$0	$0	$0	$0	$0	$ 963,048
Lord's Lake Dredge	432	$493,527	$0	$0	$0	$0	$0	$0	$0	$0	$0	$0	$0	$0	$0	$ 493,527
Magnuson Park	432	$105,073	$371,140	$0	$0	$0	$0	$0	$0	$0	$0	$0	$0	$0	$0	$ 476,213
Arbor Heights Ditch & Tester Road	432	$144,032	$461,810	$0	$0	$0	$0	$0	$0	$0	$0	$0	$0	$0	$0	$ 605,842
Drainage Improvements North Blakeley Dead End	432	$0	$35,401	$0	$0	$0	$0	$0	$0	$0	$0	$0	$0	$0	$0	$ 35,401
Tyler Lane Storm Basin	432	$0	$259,919	$0	$0	$0	$0	$0	$0	$0	$0	$0	$0	$0	$0	$ 259,919
Crystalwood/197th AVE SE Drainage Improvements	432	$0	$45,943	$371,382	$0	$0	$0	$0	$0	$0	$0	$0	$0	$0	$0	$ 417,325
Sams Street	432	$0	$124,519	$664,774	$0	$0	$0	$0	$0	$0	$0	$0	$0	$0	$0	$ 789,293
Concrete Pond 149th Street and 173rd Avenue	432	$0	$110,012	$586,784	$0	$0	$0	$0	$0	$0	$0	$0	$0	$0	$0	$ 696,796
Fryelands Industrial Park North of Lake Tye to SR-2 Runoff Treatment	432	$0	$0	$156,102	$1,286,782	$0	$0	$0	$0	$0	$0	$0	$0	$0	$0	$ 1,442,884
Capital Improvement Projects and Permit Requirements	432	$0	$0	$0	$0	$2,169,747	$2,221,821	$2,275,145	$2,329,748	$2,385,662	$2,442,918	$2,501,548	$2,561,585	$2,623,063	$2,686,017	$ 24,197,254
Total Stormwater Utility Capital		**$ 1,524,184**	**$ 1,408,744**	**$ 1,779,041**	**$ 1,286,782**	**$ 2,169,747**	**$ 2,221,821**	**$ 2,275,145**	**$ 2,329,748**	**$ 2,385,662**	**$ 2,442,918**	**$ 2,501,548**	**$ 2,561,585**	**$ 2,623,063**	**$ 2,686,017**	**$ 43,658,167**
Note: Values for years 1 through 6 are inflated at 3.0% per year and values for years 7 through 10 are inflated at 2.4%.																