PTN. OF NE 1/4 OF SEC 36, TWP 28 N, R6E W.M.

BELMONT HEIGHTS PRD

PRELIMINARY SUBDIVISION AND PRD APPLICATION
JANUARY 31, 2019

CITY OF MONROE SNOHOMISH COUNTY, WA

SURVEY DATA

EXISTING BOUNDARY, TOPOGRAPHIC, AND PLANIMETRIC INFORMATION SHOWN ON THIS PLAN AND OTHERS IN THIS SET WERE USED AS A BASIS FOR DESIGN AND REPRESENT FIELD SURVEY DATA AND MAPPING PREPARED BY LDC, AS PROVIDED BY THE PROJECT OWNER, AND DOES NOT REPRESENT WORK BY CPH CONSULTANTS. THE FOLLOWING SURVEY DATA WAS PROVIDED WITH THE TOPOGRAPHIC MAP BY LDC:

LEGAL DESCRIPTION
CHICAGO TITLE INSURANCE COMPANY
COMMITMENT NO. 500076500
COMMITMENT DATE: SEPTEMBER 14, 2018 AT 08:00 AM

TRACT 2 OF SNOHOMISH COUNTY LARGE TRACT SEGREGATION 31(7-80) RECORDED UNDER AUDITOR'S FILE NO. 8103090166, RECORDS OF SNOHOMISH COUNTY, WASHINGTON, BEING A PORTION OF THE NORTHWEST QUARTER OF THE NORTHEAST QUARTER OF SECTION 36, TOWNSHIP 28 NORTH, RANGE 6 EAST OF THE WILLAMETTE MERIDIAN.

SITUATE IN THE COUNTY OF SNOHOMISH, STATE OF WASHINGTON.

VERTICAL DATUM

NORTH AMERICAN VERTICAL DATUM–1988

HORIZONTAL DATUM

NAD 83/91
WASHINGTON STATE COORDINATES–NORTH ZONE

BASIS OF BEARING

NAD83/91 FROM GPS OBSERVATION
MONUMENTED NORTH LINE OF THE NORTHEAST QUARTER OF SECTION 36 AS SHOWN HEREON (BEARING = N 89°36'44" W)

SITE TBM

PROJECT BENCHMARK:
SET MAG NAIL IN CONCRETE CURB JOINT AS SHOWN HEREON
FOUND ELEVATION = 372.31 FEET

REFERENCES

(R1) RECORD OF SURVEY RECORDED UNDER AUDITOR'S FILE NO. 7802060255

(R2) PLAT OF TROMBLEY HILL RECORDED UNDER AUDITOR'S FILE NO. 9812155001

(R3) SNOHOMISH COUNTY LARGE TRACT SEGREGATION 31(7–80) RECORDED UNDER AUDITOR'S FILE NO. 8103090166

(C) CALCULATED

(M) MEASURED

EQUIPMENT AND PROCEDURES

METHOD OF SURVEY:
SURVEY PERFORMED BY FIELD TRAVERSE
INSTRUMENTATION:
LEICA MS–50 ROBOTIC TOTAL STATION WITH DATA COLLECTOR AND LEICA GS–14 GPS MAINTAINED IN ADJUSTMENT TO MANUFACTURES SPECIFICATIONS AS REQUIRED BY WAC 332–130–100
PRECISION:
MEETS OR EXCEEDS STATE STANDARDS WAC 332–130–090

SURVEY NOTES

THIS SURVEY HAS BEEN PREPARED FOR THE EXCLUSIVE USE OF PARTIES WHOSE NAMES APPEAR HEREON ONLY, AND DOES NOT EXTEND TO ANY UNNAMED THIRD PARTIES WITHOUT EXPRESS RECERTIFICATION BY THE LAND SURVEYOR.

BOUNDARY LINES SHOWN AND CORNERS SET REPRESENT DEED LOCATIONS; OWNERSHIP LINES MAY VARY. NO GUARANTEE OF OWNERSHIP IS EXPRESSED OR IMPLIED. THIS SURVEY WAS PERFORMED WITH THE BENEFIT OF A TITLE REPORT FROM CHICAGO TITLE INSURANCE COMPANY (COMMITMENT NO. 500076500 / COMMITMENT DATE: SEPTEMBER 14, 2018 AT 08:00 AM).

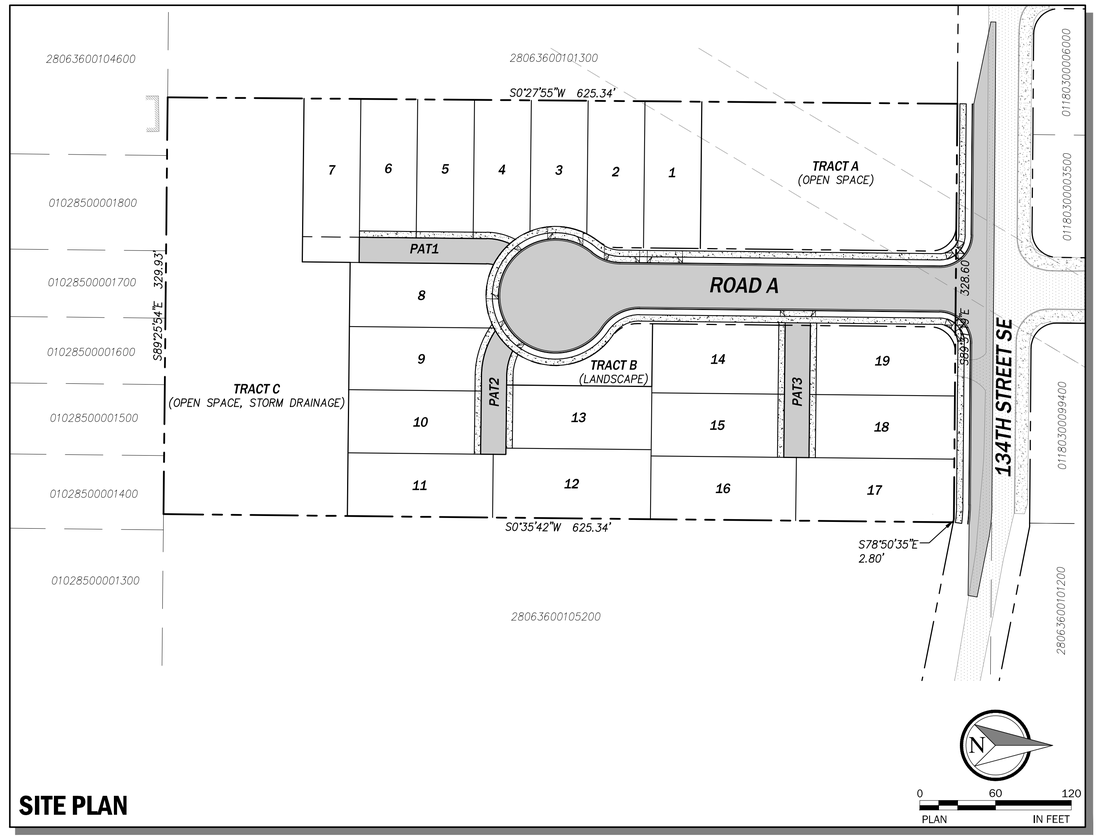

SITE PLAN

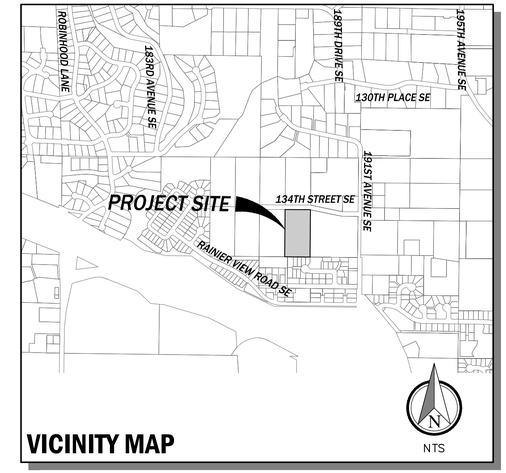

VICINITY MAP

PROJECT INFORMATION

GENERAL	
PARCEL NOS:	*28063600101900*
SITE ADDRESS:	*18830 134TH ST SE*
	MONROE, WA 98272-9753
EXISTING ZONING:	*UR9600*
SITE DEVELOPMENT	
TOTAL SITE AREA	*4.75 AC*
TOTAL DEVELOPABLE AREA	*4.75 AC*
UNDISTURBED AREA	*0.00 AC*
IMPERVIOUS AREAS:	
BUILDINGS AND DRIVEWAYS	*1.45 AC*
ROADWAY AND SIDEWALKS	*2.31 AC*
POND SURFACE	*0.41 AC*
PERVIOUS AREAS:	
PLANTER STRIP LANDSCAPING	*0.07 AC*
PARK AND YARD LANDSCAPING	*1.96 AC*
ALLOWABLE RESIDENTIAL DENSITY:	
ALLOWABLE BASE DENISTY	*4.75 AC x 3.63 DU/AC = 17 LOTS*
PRD DENSITY BONUS	*0.30 x 17 = 5 LOTS*
TOTAL ALLOWABLE UNITS	*22 LOTS*
PROPOSED NO. LOTS	*19 LOTS*
MINIMUM LOT SIZE	*4,562 SF*
MINIMUM LOT WIDTH	*45 FT*
MAX LOT COVERAGE	*60%*
RESIDENTIAL LOT MIX (MMC 18.84.080.0)	*0% ≤ 4,000 SF*
	21% 4,001 TO 5,000 SF
	79% > 5,000 SF
BUILDING SETBACKS	*10 FT - FRONT*
	20 FT - GARAGE
	10 FT - REAR
	5 FT - SIDE

PARK AND RECREATION OPEN SPACE

MINIMUM REQUIRED (975 SF/LOT x BASE DENSITY): 975 x 17 = 16,575 SF
PARK AND RECREATION OPEN SPACE PROVIDED:

TRACT A	*23,498 SF*
TOTAL	*23,498 SF*

UTILITY PURVEYORS

WATER	*CITY OF MONROE*
SANITARY SEWER	*CITY OF MONROE*
STORM DRAINAGE	*CITY OF MONROE*
FIRE DISTRICT	*FIRE DISTRICT NO. 3*
SCHOOL DISTRICT	*MONROE SCHOOL DISTRICT NO. 103*
POWER	*SNOHOMISH CO. PUD*
NATURAL GAS	*PUGET SOUND ENERGY*

PROJECT TEAM

OWNER
MATEO & BELLA BARAJAS
21020 CALHOUN RD
MONROE, WA 98272
PHONE: (425) 239-8462

APPLICANT
SSHI, LLC dba D.R. HORTON
CONTACT: JENNIFER REINER
11241 SLATER AVENUE NE
SUITE 200
KIRKLAND, WA 98033
PHONE: (425) 825-3186

CIVIL ENGINEER/PLANNER
CPH CONSULTANTS
CONTACT: MATT HOUGH, PE
11431 WILLOWS ROAD NE, SUITE 120
REDMOND, WA 98052
PHONE: (425) 285-2390
FAX: (425) 285-2389

SURVEYOR
LDC
CONTACT: MICHAEL MERRITT, PLS
20210 142ND AVENUE NE
WOODINVILLE, WA 98072
PHONE: (425) 806-1869

LANDSCAPE ARCHITECT
CRAMER DESIGN CONSULTANTS
CONTACT: GAYLE CRAMER, RLA
1909 242ND STREET SE
BOTHELL, WA 98021
PHONE: (425) 241-6258

GEOTECHNICAL ENGINEER
TERRA ASSOCIATES, INC.
CONTACT: CAROLYN DECKER, PE
12220 113TH AVENUE NE
KIRKLAND, WA 98034
PHONE: (425) 821-7777

TRAFFIC ENGINEER
GIBSON TRAFFIC, INC
CONTACT: BRAD LINCOLN, PE
2802 WETMORE AVENUE, SUITE 220
EVERETT, WA 98201
PHONE: (425) 339-8266

DRAWING INDEX

SHEET	*DWG*	*DESCRIPTION*
1	P0.00	COVER
2	P0.10	EXISTING CONDITIONS
3	P1.00	PRELIMINARY CLEARING AND TESC PLAN
4	P2.00	PRELIMINARY SUBDIVISON AND PRD SITE PLAN
5	P2.10	TYPICAL ROADWAY SECTIONS
6	P3.00	PRELIMINARY GRADING PLAN
7	P3.01	PRELIMINARY STORM DRAINAGE PLAN
8	P3.05	FRONTAGE ROADWAY IMPROVMENTS
9	P3.10	PRELIMINARY ROAD PROFILES
10	P3.11	PRELIMINARY ROAD PROFILES
11	P3.20	STORM POND PLAN AND SECTIONS
12	P6.00	PRELIMINARY UTILITY PLAN
13	P7.00	PARK, RECREATION AND OPEN SPACE PLAN
14	L-1	LANDSCAPE PLAN
15	L-2	LANDSCAPE PLAN
16	L-3	LANDSCAPE PLAN
17	L-4	LANDSCAPE PLAN
18	L-5	LANDSCAPE PLAN

811
Know what's **below.**
Call before you dig.

CP|H
CONSULTANTS
Site Planning • Civil Engineering
Land Use Consulting • Project Management
11431 Willows Rd. NE, Suite 120
Redmond, WA 98052
Phone: (425) 285-2390 | FAX: (425) 285-2389
www.cphconsultants.com

Copyright © 2019 CPH Consultants, LLC. All Rights Reserved.

P:\project\0035\18027\Dwg\Sheets\Preliminary Plat\P0.00.dwg
2/4/2019 5:07 PM PETER EVANS

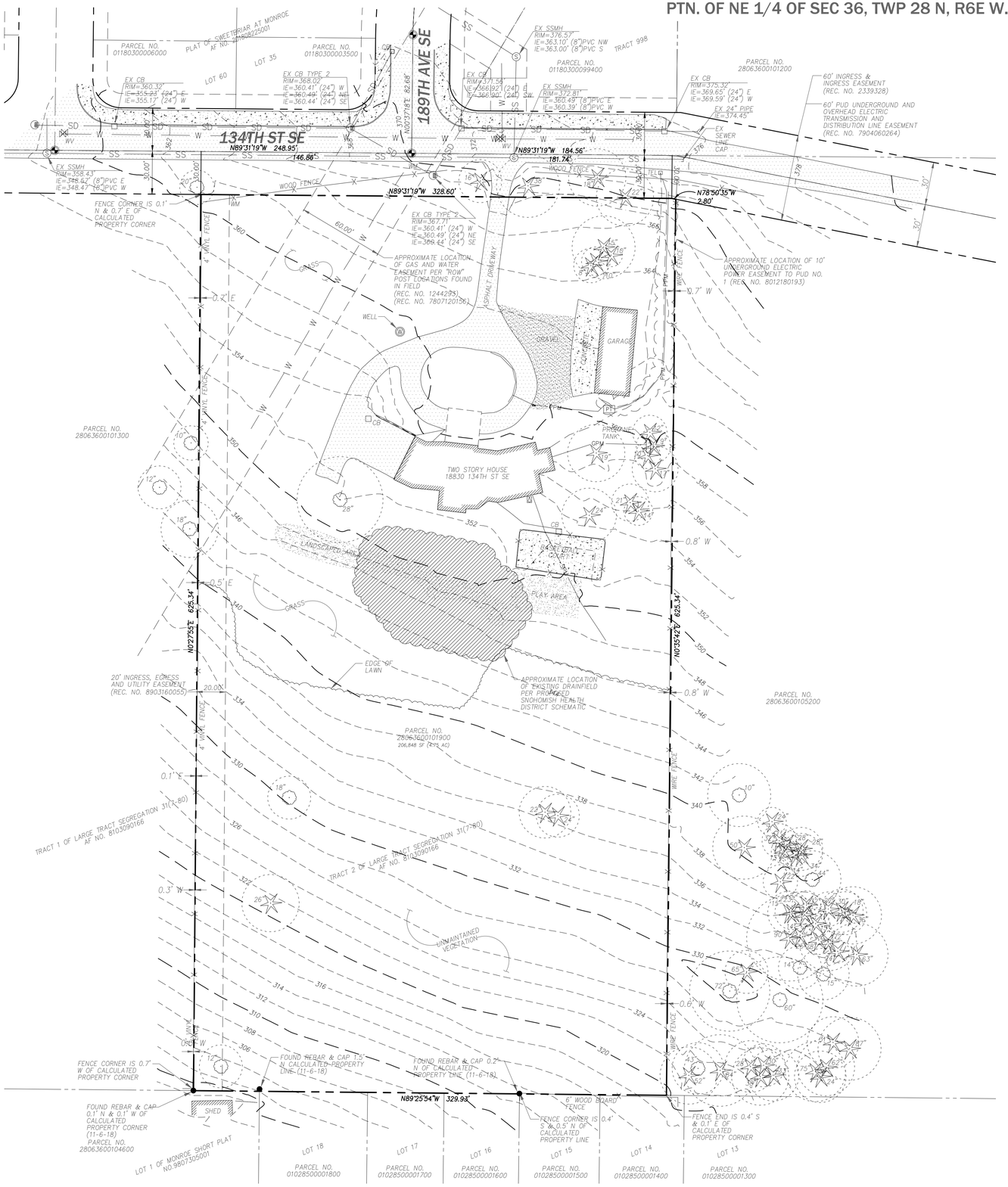

SURVEY DATA

EXISTING BOUNDARY, TOPOGRAPHIC, AND PLANIMETRIC INFORMATION SHOWN ON THIS PLAN AND OTHERS IN THIS SET WERE USED AS A BASIS FOR DESIGN AND REPRESENT FIELD SURVEY DATA AND MAPPING PREPARED BY LDC (LDC PROJECT NO. V18-139), AS PROVIDED BY THE PROJECT OWNER, AND DOES NOT REPRESENT WORK BY CPH CONSULTANTS. THE FOLLOWING SURVEY DATA WAS PROVIDED WITH THE TOPOGRAPHIC MAP BY LDC:

LEGAL DESCRIPTION

TRACT 2 OF SNOHOMISH COUNTY LARGE TRACT SEGREGATION 31(7-80) RECORDED UNDER AUDITOR'S FILE NO. 8103090166, RECORDS OF SNOHOMISH COUNTY, WASHINGTON, BEING A PORTION OF THE NORTHWEST QUARTER OF THE NORTHEAST QUARTER OF SECTION 36, TOWNSHIP 28 NORTH, RANGE 6 EAST OF THE WILLAMETTE MERIDIAN.

SITUATE IN THE COUNTY OF SNOHOMISH, STATE OF WASHINGTON.

VERTICAL DATUM

NORTH AMERICAN VERTICAL DATUM–1988

HORIZONTAL DATUM

NAD 83/91
WASHINGTON STATE COORDINATES–NORTH ZONE

BASIS OF BEARING

NAD83/91 FROM GPS OBSERVATION
MONUMENTED NORTH LINE OF THE NORTHEAST QUARTER OF SECTION 36 AS SHOWN HEREON (BEARING = N 89°36'44" W)

SITE TBM

PROJECT BENCHMARK:
SET MAG NAIL IN CONCRETE CURB JOINT AS SHOWN HEREON
FOUND ELEVATION = 372.31 FEET

REFERENCES

(R1) RECORD OF SURVEY RECORDED UNDER AUDITOR'S FILE NO. 7802060255

(R2) PLAT OF TROMBLEY HILL RECORDED UNDER AUDITOR'S FILE NO. 9812155001

(R3) SNOHOMISH COUNTY LARGE TRACT SEGREGATION 31(7–80) RECORDED UNDER AUDITOR'S FILE NO. 8103090166

(C) CALCULATED

(M) MEASURED

EQUIPMENT AND PROCEDURES

METHOD OF SURVEY:
SURVEY PERFORMED BY FIELD TRAVERSE
INSTRUMENTATION:
LEICA MS–50 ROBOTIC TOTAL STATION WITH DATA COLLECTOR AND LEICA GS–14 GPS MAINTAINED IN ADJUSTMENT TO MANUFACTURES SPECIFICATIONS AS REQUIRED BY WAC 332–130–100
PRECISION:
MEETS OR EXCEEDS STATE STANDARDS WAC 332–130–090

SURVEY NOTES

THIS SURVEY HAS BEEN PREPARED FOR THE EXCLUSIVE USE OF PARTIES WHOSE NAMES APPEAR HEREON ONLY, AND DOES NOT EXTEND TO ANY UNNAMED THIRD PARTIES WITHOUT EXPRESS RECERTIFICATION BY THE LAND SURVEYOR.

BOUNDARY LINES SHOWN AND CORNERS SET REPRESENT DEED LOCATIONS; OWNERSHIP LINES MAY VARY. NO GUARANTEE OF OWNERSHIP IS EXPRESSED OR IMPLIED. THIS SURVEY WAS PERFORMED WITH THE BENEFIT OF A TITLE REPORT FROM CHICAGO TITLE INSURANCE COMPANY (COMMITMENT NO. 500076500 / COMMITMENT DATE: SEPTEMBER 14, 2018 AT 08:00 AM).

0 40 80
PLAN IN FEET

Know what's **below.** **Call** before you dig.

Copyright © 2019 CPH Consultants, LLC. All Rights Reserved.

NO.	DATE	REVISION	BY	CK.
1	1/31/19	PRELIMINARY PRD SUBMITTAL	CMT	MJH

MATTHEW J. HEBER — STATE OF WASHINGTON — 38364 — REGISTERED PROFESSIONAL ENGINEER — 1/31/2019

BELMONT HEIGHTS PRD

PRELIMINARY SUBDIVISION AND PRD APPLICATION

EXISTING CONDITIONS

CITY OF MONROE — SNOHOMISH COUNTY, WA

CLIENT

D.R. HORTON
11241 SLATER AVENUE NE
SUITE 200
KIRKLAND, WA 98033
PHONE: (425) 825-3186

CPH CONSULTANTS
Site Planning • Civil Engineering
Land Use Consulting • Project Management
11431 Willows Rd. NE, Suite 120
Redmond, WA 98052
Phone: (425) 285-2390 | FAX: (425) 285-2389
www.cphconsultants.com

PROJECT NO. 0035-18-27

DRAWING P0.10

SHEET 2 OF 18

P:\project\0035\18027\Dwg\Sheets\Preliminary Plat\P0.10.dwg
2/4/2019 5:07 PM PETER EVANS

PTN. OF NE 1/4 OF SEC 36, TWP 28 N, R6E W.M.

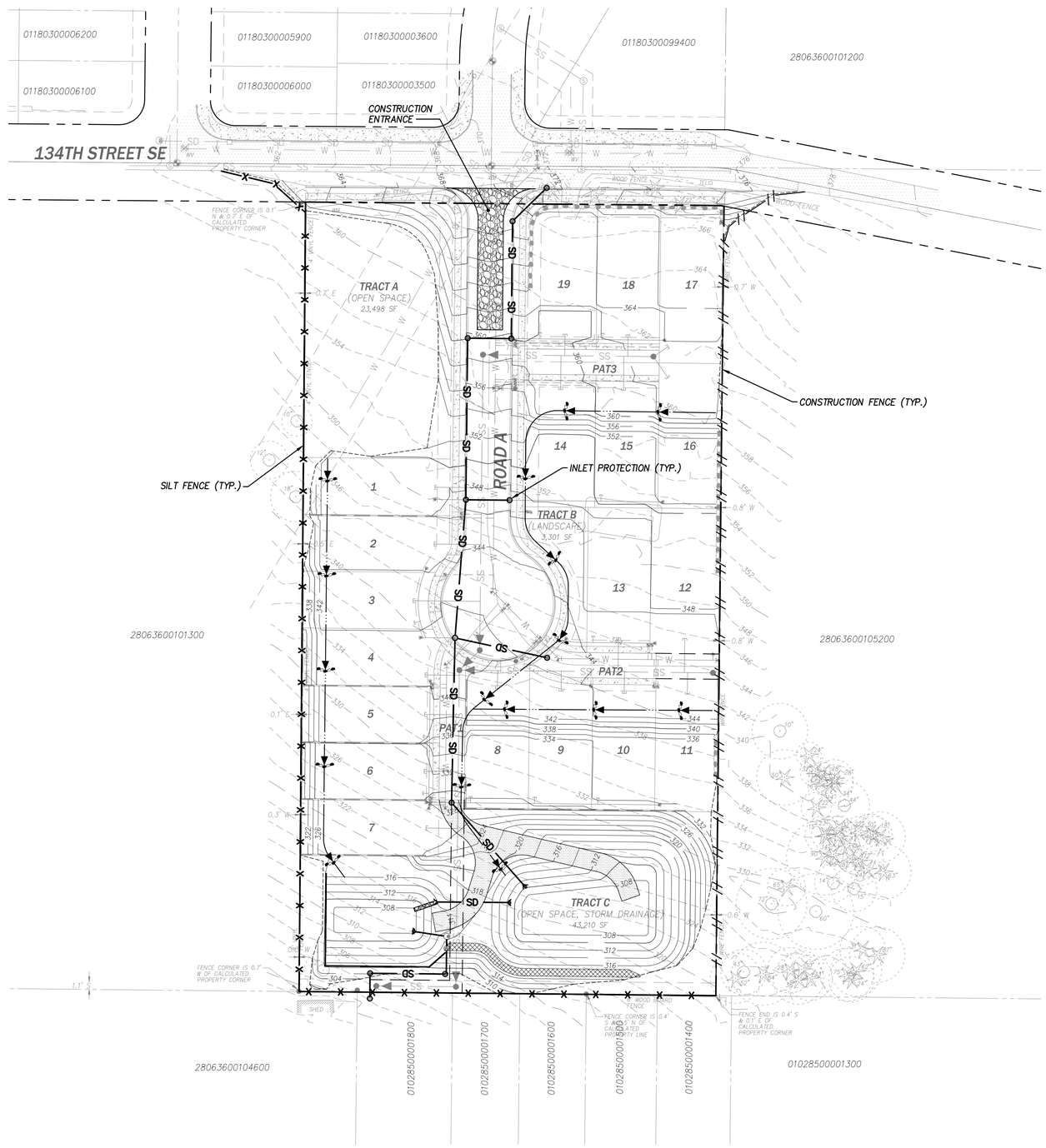

LEGEND

- APPROX. LIMIT OF GRADING
- SILT FENCE
- CONSTRUCTION FENCE
- TEMPORARY INTERCEPTOR DITCH WITH ROCK CHECK DAM
- SD — PERMANENT STORM DRAIN PIPE
- TYPE 1 CATCH BASIN W/STANDARD GRATE
- TYPE 2 CATCH BASIN W/STANDARD GRATE
- STORM DRAINAGE PROTECTION INSERT
- CONSTRUCTION ENTRANCE

NOTE:

1. THE TEMPORARY EROSION AND SEDIMENT CONTROL FACILITIES SHOWN ON THIS PLAN ILLUSTRATE THE MINIMUM AND TYPICAL BMPs NECESSARY. ADDITIONAL FACILITIES AND SPECIFICATIONS WILL BE PROVIDED WITH THE FINAL ENGINEERING DESIGN AND CONSTRUCTION PLANS FOR THE PROJECT.
2. ANY EXISTING DOMESTIC WATER WELLS LOCATED ON-SITE SHALL BE ABANDONED AND DECOMMISSIONED IN ACCORDANCE WITH DEPARTMENT OF ECOLOGY STANDARDS.
3. EXISTING PRIVATE SEPTIC TANKS AND DRAINFIELDS ON THE SITE SHALL BE ABANDONED IN ACCORDANCE WITH SNOHOMISH COUNTY DEPARTMENT OF HEALTH STANDARDS.
4. A SEPARATE DEMOLITION PERMIT WILL REMOVE ALL EXISTING ON-SITE STRUCTURES.

NO.	DATE	REVISION	BY	CK.
1	1/31/19	PRELIMINARY PRD SUBMITTAL	CMT	MJH

MATTHEW J. HEBER — STATE OF WASHINGTON — 36364 — REGISTERED PROFESSIONAL ENGINEER — 1/31/2019

BELMONT HEIGHTS PRD

PRELIMINARY SUBDIVISION AND PRD APPLICATION

PRELIMINARY CLEARING AND TESC PLAN

CITY OF MONROE — SNOHOMISH COUNTY, WA

CLIENT

D.R. HORTON
11241 SLATER AVENUE NE
SUITE 200
KIRKLAND, WA 98033
PHONE: (425) 825-3186

CP|H CONSULTANTS
Site Planning • Civil Engineering
Land Use Consulting • Project Management
11431 Willows Rd. NE, Suite 120
Redmond, WA 98052
Phone: (425) 285-2390 | FAX: (425) 285-2389
www.cphconsultants.com

PROJECT NO. 0035-18-27

DRAWING P1.00

SHEET 3 OF 18

0 50 100 IN FEET — PLAN

Know what's below. Call before you dig.

Copyright © 2019 CPH Consultants, LLC. All Rights Reserved.

P:\project\0035\18027\Dwg\Sheets\Preliminary Plat\P1.00.dwg
2/4/2019 5:07 PM PETER EVANS

PTN. OF NE 1/4 OF SEC 36, TWP 28 N, R6E W.M.

PROJECT INFORMATION

GENERAL	
PARCEL NOS:	28063600101900
SITE ADDRESS:	18830 134TH ST SE MONROE, WA 98272-9753
EXISTING ZONING:	UR9600
SITE DEVELOPMENT	
TOTAL SITE AREA	4.75 AC
TOTAL DEVELOPABLE AREA	4.75 AC
UNDISTURBED AREA	0.00 AC
IMPERVIOUS AREAS:	
BUILDINGS AND DRIVEWAYS	1.45 AC
ROADWAY AND SIDEWALKS	2.31 AC
POND SURFACE	0.41 AC
PERVIOUS AREAS:	
PLANTER STRIP LANDSCAPING	0.07 AC
PARK AND YARD LANDSCAPING	1.96 AC
ALLOWABLE RESIDENTIAL DENSITY:	
ALLOWABLE BASE DENISTY	4.75 AC x 3.63 DU/AC = 17 LOTS
PRD DENSITY BONUS	0.30 x 17 = 5 LOTS
TOTAL ALLOWABLE UNITS	22 LOTS
PROPOSED NO. LOTS	19 LOTS
MINIMUM LOT SIZE	4,562 SF
MINIMUM LOT WIDTH	45 FT
MAX LOT COVERAGE	60%
RESIDENTIAL LOT MIX (MMC 18.84.080.O)	0% ≤ 4,000 SF 21% 4,001 TO 5,000 SF 79% > 5,000 SF
BUILDING SETBACKS	10 FT - FRONT 20 FT - GARAGE 10 FT - REAR 5 FT - SIDE

PARK AND RECREATION OPEN SPACE

MINIMUM REQUIRED (975 SF/LOT x BASE DENSITY): 975 x 17 = 16,575 SF

PARK AND RECREATION OPEN SPACE PROVIDED:

TRACT A	23,498 SF
TOTAL	23,498 SF

UTILITY PURVEYORS

WATER	CITY OF MONROE
SANITARY SEWER	CITY OF MONROE
STORM DRAINAGE	CITY OF MONROE
FIRE DISTRICT	FIRE DISTRICT NO. 3
SCHOOL DISTRICT	MONROE SCHOOL DISTRICT NO. 103
POWER	SNOHOMISH CO. PUD
NATURAL GAS	PUGET SOUND ENERGY

ROADWAY ALIGNMENT AND TRACT DATA

LINE TABLE			CURVE TABLE			
LINE #	LENGTH	DIRECTION	CURVE #	Δ	RADIUS	LENGTH
L5	111.57'	S89°22'42"E	C2	S62°55'20"E	55.00'	50.79'
L4	57.70'	S36°27'59"E	C1	N3°40'06"W	53.00'	7.94'
L3	180.00'	S89°22'42"E	C3	N20°16'49"E	35.00'	24.02'
L2	125.41'	N7°57'29"W				
L1	284.18'	N0°37'18"E				
L7	125.72'	N0°37'18"E				
L6	67.48'	N39°56'19"E				

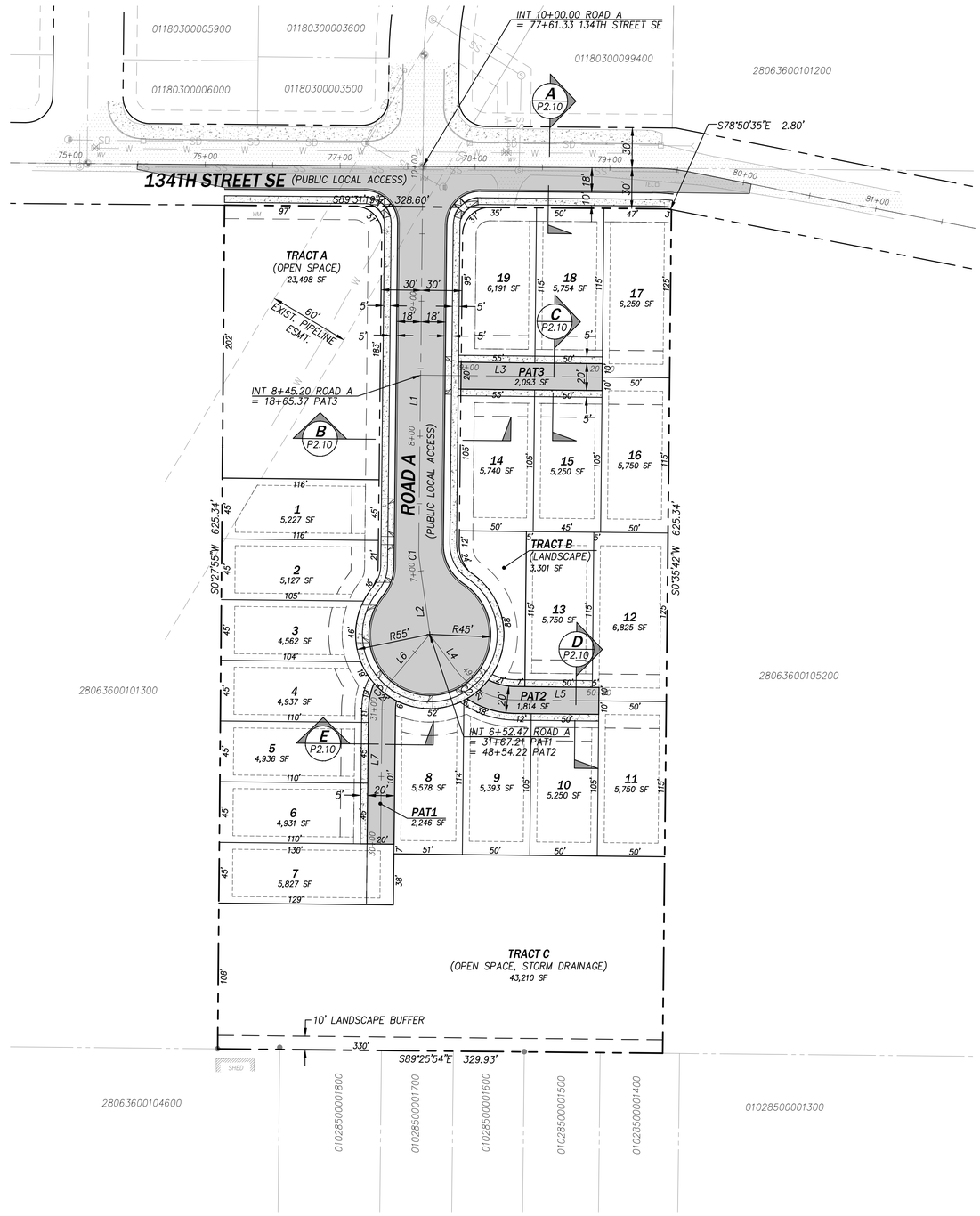

SURVEY DATA

EXISTING BOUNDARY, TOPOGRAPHIC, AND PLANIMETRIC INFORMATION SHOWN ON THIS PLAN AND OTHERS IN THIS SET WERE USED AS A BASIS FOR DESIGN AND REPRESENT FIELD SURVEY DATA AND MAPPING PREPARED BY LDC, AS PROVIDED BY THE PROJECT OWNER, AND DOES NOT REPRESENT WORK BY CPH CONSULTANTS. THE FOLLOWING SURVEY DATA WAS PROVIDED WITH THE TOPOGRAPHIC MAP BY LDC:

LEGAL DESCRIPTION

CHICAGO TITLE INSURANCE COMPANY
COMMITMENT NO. 500076500
COMMITMENT DATE: SEPTEMBER 14, 2018 AT 08:00 AM

TRACT 2 OF SNOHOMISH COUNTY LARGE TRACT SEGREGATION 31(7-80) RECORDED UNDER AUDITOR'S FILE NO. 8103090166, RECORDS OF SNOHOMISH COUNTY, WASHINGTON, BEING A PORTION OF THE NORTHWEST QUARTER OF THE NORTHEAST QUARTER OF SECTION 36, TOWNSHIP 28 NORTH, RANGE 6 EAST OF THE WILLAMETTE MERIDIAN.

SITUATE IN THE COUNTY OF SNOHOMISH, STATE OF WASHINGTON.

VERTICAL DATUM

NORTH AMERICAN VERTICAL DATUM–1988

HORIZONTAL DATUM

NAD 83/91
WASHINGTON STATE COORDINATES–NORTH ZONE

BASIS OF BEARING

NAD83/91 FROM GPS OBSERVATION
MONUMENTED NORTH LINE OF THE NORTHEAST QUARTER OF SECTION 36 AS SHOWN HEREON (BEARING = N 89°36'44" W)

SITE TBM

PROJECT BENCHMARK:
SET MAG NAIL IN CONCRETE CURB JOINT AS SHOWN HEREON
FOUND ELEVATION = 372.31 FEET

REFERENCES

(R1) RECORD OF SURVEY RECORDED UNDER AUDITOR'S FILE NO. 7802060255

(R2) PLAT OF TROMBLEY HILL RECORDED UNDER AUDITOR'S FILE NO. 9812155001

(R3) SNOHOMISH COUNTY LARGE TRACT SEGREGATION 31(7–80) RECORDED UNDER AUDITOR'S FILE NO. 8103090166

(C) CALCULATED

(M) MEASURED

EQUIPMENT AND PROCEDURES

METHOD OF SURVEY:
SURVEY PERFORMED BY FIELD TRAVERSE
INSTRUMENTATION:
LEICA MS–50 ROBOTIC TOTAL STATION WITH DATA COLLECTOR AND LEICA GS–14 GPS MAINTAINED IN ADJUSTMENT TO MANUFACTURES SPECIFICATIONS AS REQUIRED BY WAC 332–130–100
PRECISION:
MEETS OR EXCEEDS STATE STANDARDS WAC 332–130–090

SURVEY NOTES

THIS SURVEY HAS BEEN PREPARED FOR THE EXCLUSIVE USE OF PARTIES WHOSE NAMES APPEAR HEREON ONLY, AND DOES NOT EXTEND TO ANY UNNAMED THIRD PARTIES WITHOUT EXPRESS RECERTIFICATION BY THE LAND SURVEYOR.

BOUNDARY LINES SHOWN AND CORNERS SET REPRESENT DEED LOCATIONS; OWNERSHIP LINES MAY VARY. NO GUARANTEE OF OWNERSHIP IS EXPRESSED OR IMPLIED. THIS SURVEY WAS PERFORMED WITH THE BENEFIT OF A TITLE REPORT FROM CHICAGO TITLE INSURANCE COMPANY (COMMITMENT NO. 500076500 / COMMITMENT DATE: SEPTEMBER 14, 2018 AT 08:00 AM).

0 50 100
PLAN IN FEET

Know what's below. Call before you dig.

Copyright © 2019 CPH Consultants, LLC. All Rights Reserved.

NO.	DATE	REVISION	BY	CK.
1	1/31/19	PRELIMINARY PRD SUBMITTAL	CMT	MJH

MATTHEW J. HEBER — STATE OF WASHINGTON — 36400 — REGISTERED PROFESSIONAL ENGINEER — 1/31/2019

BELMONT HEIGHTS PRD

PRELIMINARY SUBDIVISION AND PRD APPLICATION

PRELIMINARY SUBDIVISON AND PRD SITE PLAN

SNOHOMISH COUNTY, WA

CITY OF MONROE

CLIENT

D.R. HORTON
11241 SLATER AVENUE NE
SUITE 200
KIRKLAND, WA 98033
PHONE: (425) 825-3186

CP|H CONSULTANTS
Site Planning • Civil Engineering
Land Use Consulting • Project Management
11431 Willows Rd. NE, Suite 120
Redmond, WA 98052
Phone: (425) 285-2390 | FAX: (425) 285-2389
www.cphconsultants.com

PROJECT NO. 0035-18-27

DRAWING P2.00

SHEET 4 OF 18

P:\project\0035\18027\Dwg\Sheets\Preliminary Plat\P2.00.dwg
2/4/2019 5:08 PM PETER EVANS

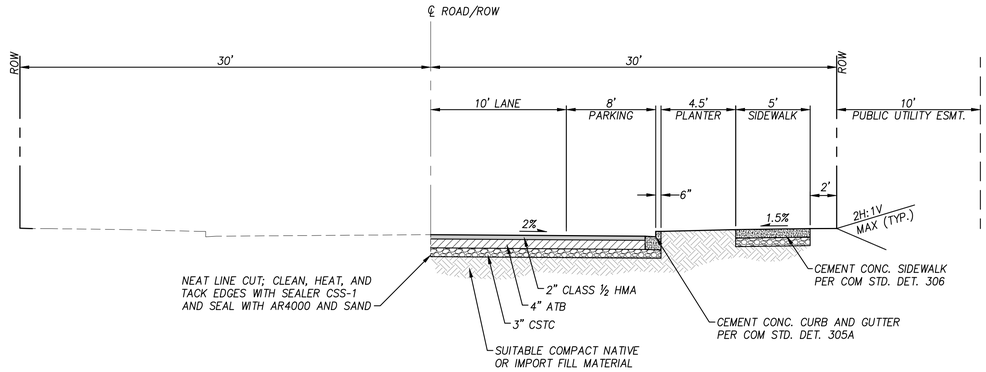

A P2.00 TYPICAL ROAD SECTION - 134TH STREET SE

NOT TO SCALE (LOCAL ACCESS)

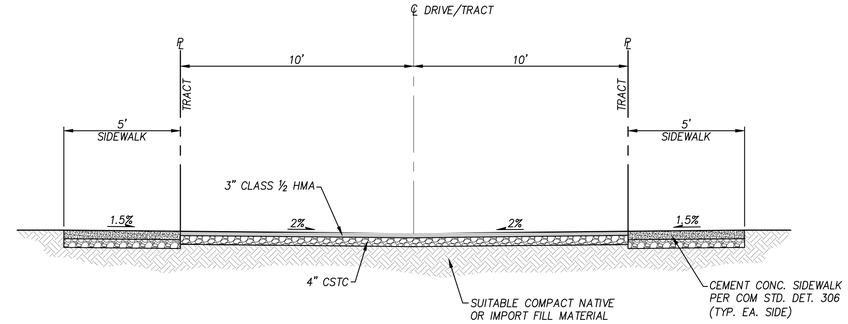

D P2.00 TYPICAL SECTION - PAT2

NOT TO SCALE (PRIVATE ACCESS)

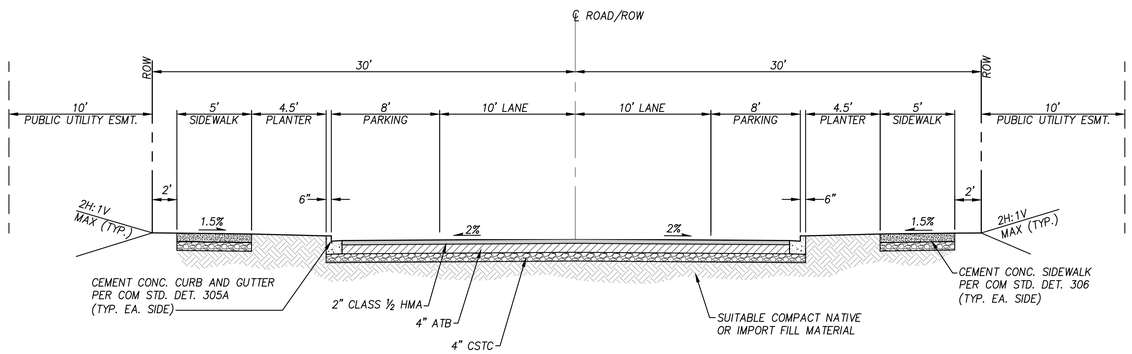

B P2.00 TYPICAL ROAD SECTION - ROAD A

NOT TO SCALE (LOCAL ACCESS)

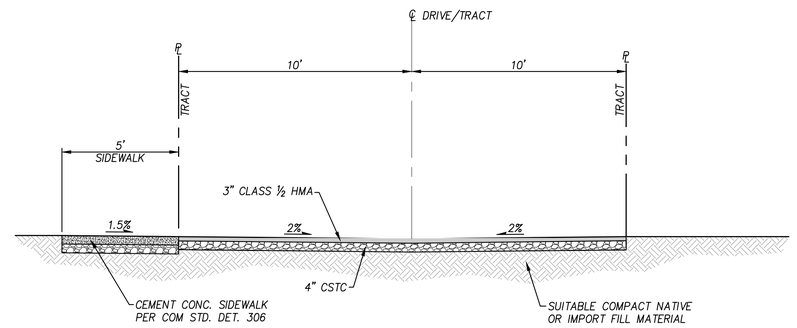

E P2.00 TYPICAL SECTION - PAT1

NOT TO SCALE (PRIVATE ACCESS)

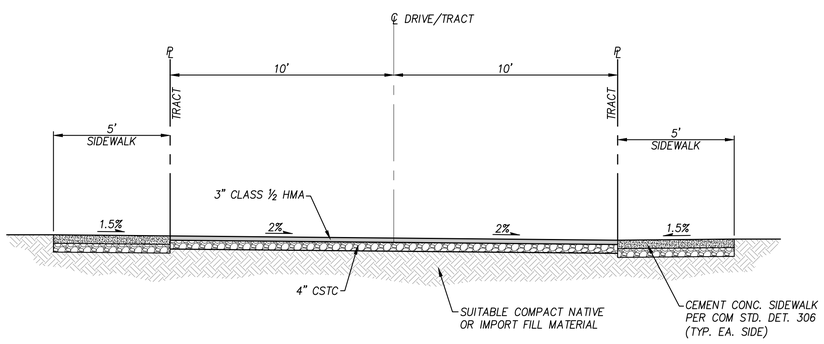

C P2.00 TYPICAL SECTION - PAT3

NOT TO SCALE (PRIVATE ACCESS)

NO.	DATE	REVISION	BY	CK.
1	1/31/19	PRELIMINARY PRD SUBMITTAL	CMT	MJH

MATTHEW J. HIRCH — STATE OF WASHINGTON — 36364 — REGISTERED PROFESSIONAL ENGINEER — 1/31/2019

BELMONT HEIGHTS PRD

PRELIMINARY SUBDIVISION AND PRD APPLICATION

TYPICAL ROADWAY SECTIONS

CITY OF MONROE — SNOHOMISH COUNTY, WA

CLIENT

D.R. HORTON
11241 SLATER AVENUE NE
SUITE 200
KIRKLAND, WA 98033
PHONE: (425) 825-3186

CPH CONSULTANTS
Site Planning • Civil Engineering
Land Use Consulting • Project Management
11431 Willows Rd. NE, Suite 120
Redmond, WA 98052
Phone: (425) 285-2390 | FAX: (425) 285-2389
www.cphconsultants.com

PROJECT NO. 0035-18-27

DRAWING P2.10

SHEET 5 OF 18

811 Know what's **below.** **Call** before you dig.

Copyright © 2019 CPH Consultants, LLC. All Rights Reserved.

P:\project\0035\18027\Dwg\Sheets\Preliminary Plat\P2.10.dwg
2/4/2019 5:08 PM PETER EVANS

PTN. OF NE 1/4 OF SEC 36, TWP 28 N, R6E W.M.

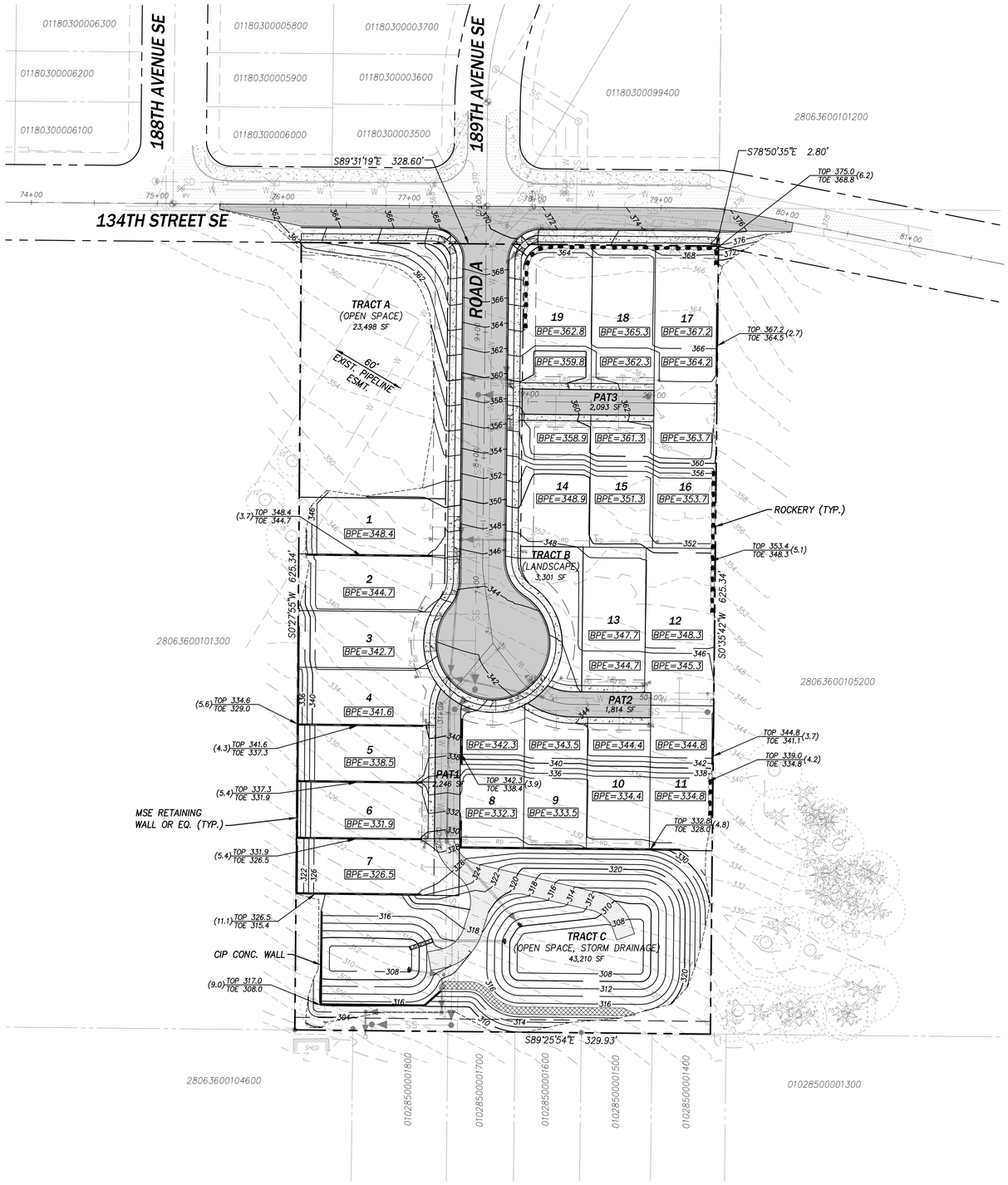

LEGEND

- MSE RETAINING WALL
- ROCKERY
- GRADE BREAK
- APPROX. LIMITS OF GRADING
- BPE=500.00 — BEARING PAD ELEVATION
- 160 — EXIST. TOPOGRAPHIC CONTOUR
- 160 — PROPOSED GRADE CONTOUR
- TYPE 1 STORM DRAINAGE CATCH BASIN
- TYPE 2 STORM DRAINAGE CATCH BASIN
- SD — STORM DRAINAGE PIPE
- TOP 246 TOE 242 (4) — FINISHED GRADE AT TOP/TOE OF WALL

APPROXIMATE EARTHWORK QUANTITIES

THE FOLLOWING EARTHWORK QUANTITIES ARE APPROXIMATE BASED ON PRELIMINARY FINISHED DESIGN GRADES AND ARE PROVIDED TO ILLUSTRATE THE GENERAL EARTHWORK EFFORTS FOR THE PROJECT EXCLUDING VOLUMES PAVEMENT SECTIONS AND TRENCH DISPLACEMENT:

8" STRIPPING:	4,597 CY
CUT:	10,845 CY
FILL:	12,154 CY
NET (FILL):	1,300 CY

0 50 100
PLAN IN FEET

Know what's below. Call before you dig.

Copyright © 2019 CPH Consultants, LLC. All Rights Reserved.

NO.	DATE	REVISION	BY	CK.
1	1/31/19	PRELIMINARY PRD SUBMITTAL	CMT	MJH

MATTHEW J. HEBDEN — STATE OF WASHINGTON — 36400 — REGISTERED PROFESSIONAL ENGINEER — 1/31/2019

BELMONT HEIGHTS PRD

PRELIMINARY SUBDIVISION AND PRD APPLICATION

PRELIMINARY GRADING PLAN

CITY OF MONROE

SNOHOMISH COUNTY, WA

CLIENT

D.R. HORTON
11241 SLATER AVENUE NE
SUITE 200
KIRKLAND, WA 98033
PHONE: (425) 825-3186

CPH CONSULTANTS
Site Planning • Civil Engineering
Land Use Consulting • Project Management
11431 Willows Rd. NE, Suite 120
Redmond, WA 98052
Phone: (425) 285-2390 | FAX: (425) 285-2389
www.cphconsultants.com

PROJECT NO. 0035-18-27

DRAWING P3.00

SHEET 6 OF 18

P:\project\0035\18027\Dwg\Sheets\Preliminary Plat\P3.00.dwg
2/4/2019 5:08 PM PETER EVANS

PTN. OF NE 1/4 OF SEC 36, TWP 28 N, R6E W.M.

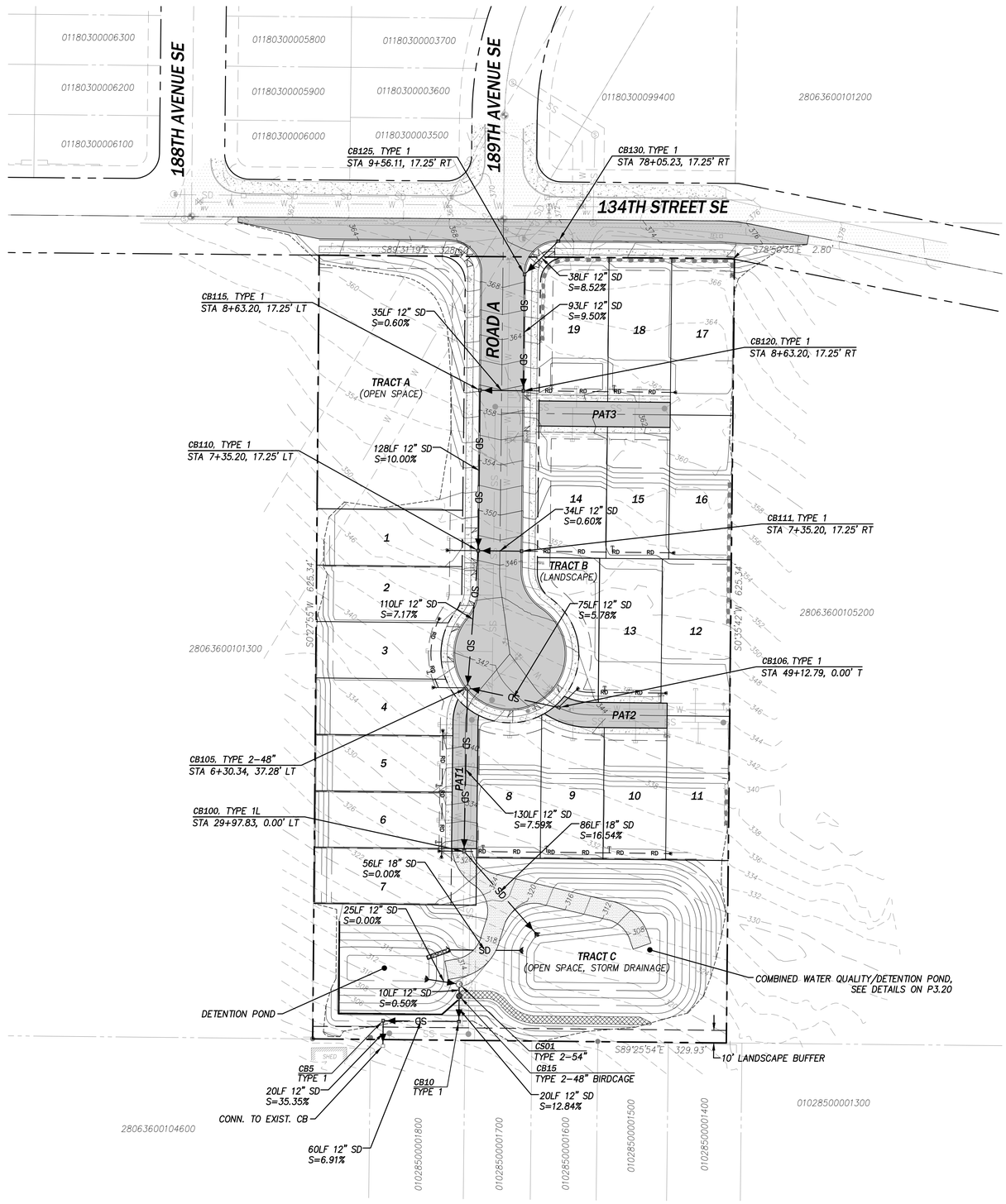

LEGEND

- MSE RETAINING WALL
- ROCKERY
- EXIST. TOPOGRAPHIC CONTOUR
- PROPOSED GRADE CONTOUR
- TYPE 1 STORM DRAINAGE CATCH BASIN
- TYPE 2 STORM DRAINAGE CATCH BASIN
- SD — STORM DRAINAGE PIPE
- RD — RD — ROOF DRAIN CONNECTION

0 50 100
PLAN IN FEET

811 Know what's below. Call before you dig.

Copyright © 2019 CPH Consultants, LLC. All Rights Reserved.

NO.	DATE	REVISION	BY	CK.
1	1/31/19	PRELIMINARY PRD SUBMITTAL	CMT	MJH

MATTHEW J. HOUGH
STATE OF WASHINGTON
REGISTERED PROFESSIONAL ENGINEER
1/31/2019

BELMONT HEIGHTS PRD

PRELIMINARY SUBDIVISION AND PRD APPLICATION

PRELIMINARY STORM DRAINAGE PLAN

CITY OF MONROE SNOHOMISH COUNTY, WA

CLIENT

D.R. HORTON
11241 SLATER AVENUE NE
SUITE 200
KIRKLAND, WA 98033
PHONE: (425) 825-3186

CPH CONSULTANTS
Site Planning • Civil Engineering
Land Use Consulting • Project Management
11431 Willows Rd. NE, Suite 120
Redmond, WA 98052
Phone: (425) 285-2390 | FAX: (425) 285-2389
www.cphconsultants.com

PROJECT NO. 0035-18-27

DRAWING P3.01

SHEET 7 OF 18

P:\project\0035\18027\Dwg\Sheets\Preliminary Plat\P3.01.dwg
2/4/2019 5:08 PM PETER EVANS

PTN. OF NE 1/4 OF SEC 36, TWP 28 N, R6E W.M.

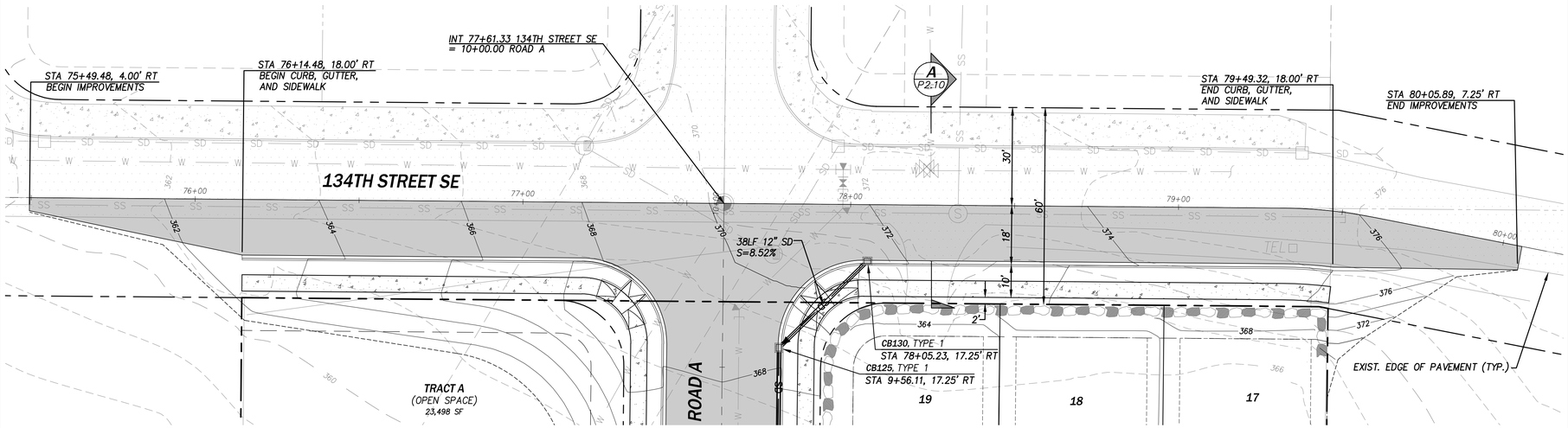

SEE SHEET C3.01

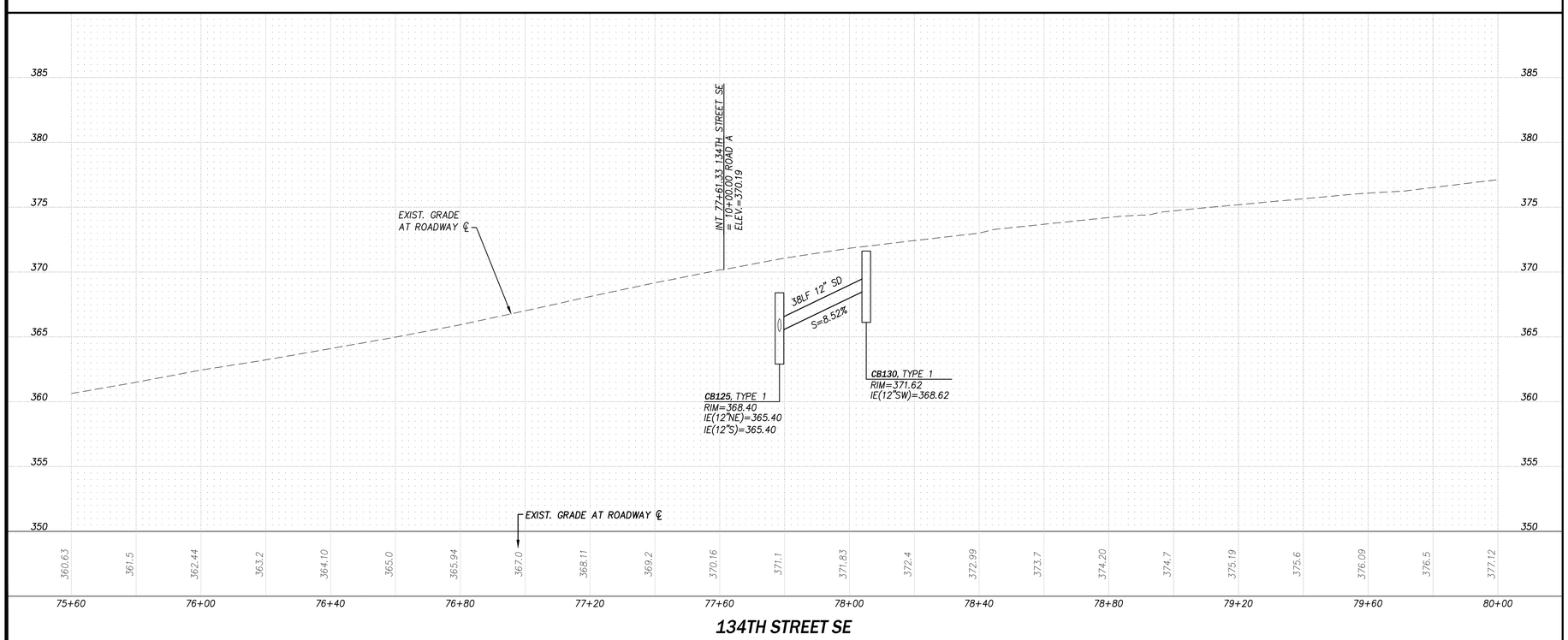

134TH STREET SE

N

0 5 10
VERT. IN FEET
0 20 40
HORIZ. IN FEET

811
Know what's below.
Call before you dig.

Copyright © 2019 CPH Consultants, LLC. All Rights Reserved.

NO.	DATE	REVISION	BY	CK.
0	1/31/19	PRELIMINARY PRD SUBMITTAL	CMT	MJH

MATTHEW J. HOUGH
STATE OF WASHINGTON
36495
REGISTERED
PROFESSIONAL ENGINEER
1/31/2019

BELMONT HEIGHTS PRD

PRELIMINARY SUBDIVISION AND PRD APPLICATION

FRONTAGE ROADWAY IMPROVMENTS

CITY OF MONROE SNOHOMISH COUNTY, WA

CLIENT

D.R. HORTON
11241 SLATER AVENUE NE
SUITE 200
KIRKLAND, WA 98033
PHONE: (425) 825-3186

CPH CONSULTANTS
Site Planning • Civil Engineering
Land Use Consulting • Project Management
11431 Willows Rd. NE, Suite 120
Redmond, WA 98052
Phone: (425) 285-2390 | FAX: (425) 285-2389
www.cphconsultants.com

PROJECT NO.
0035-18-27

DRAWING
P3.05

SHEET 8 OF 18

P:\project\0035\18027\Dwg\Sheets\Preliminary Plat\P3.05.dwg
2/4/2019 5:08 PM PETER EVANS

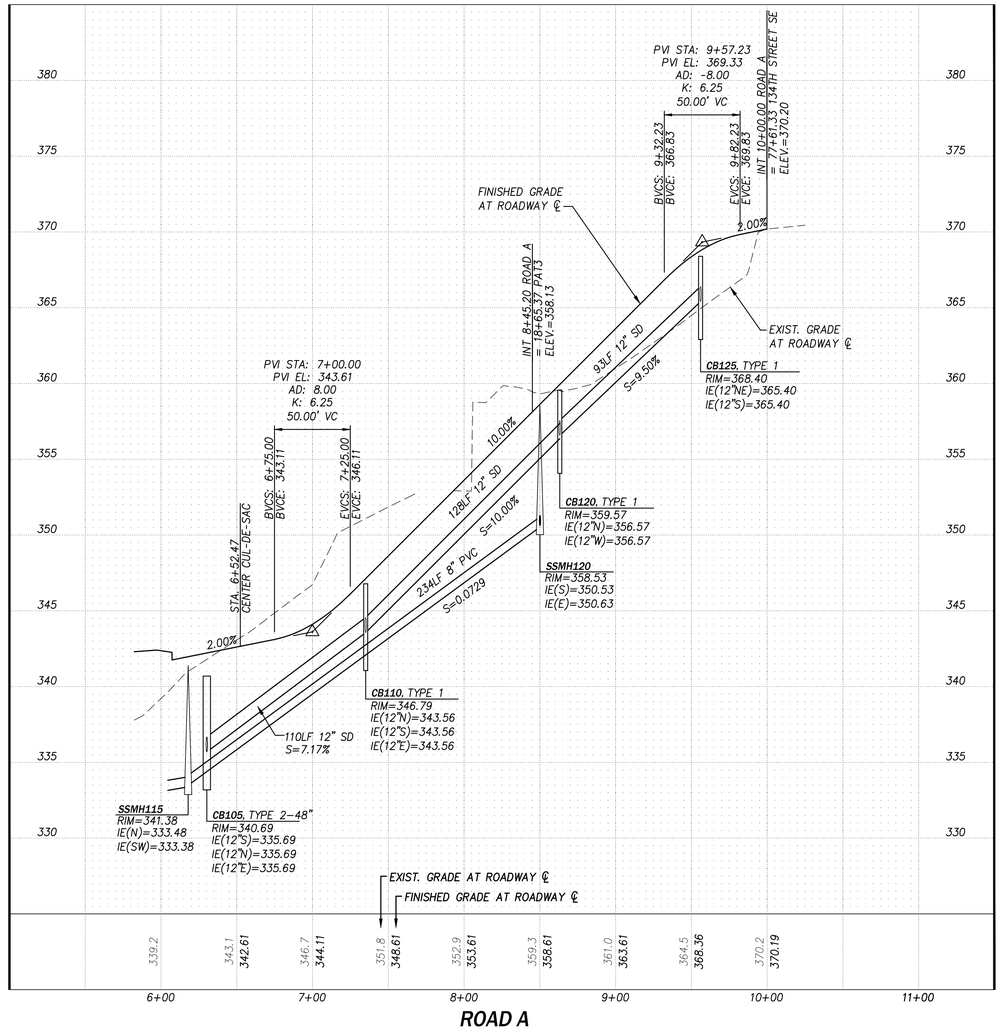

NO.	DATE	REVISION	BY	CK.
1	1/31/19	PRELIMINARY PRD SUBMITTAL	CMT	MJH

MATTHEW J. HIRCHE — STATE OF WASHINGTON — 36364 — REGISTERED PROFESSIONAL ENGINEER — 1/31/2019

BELMONT HEIGHTS PRD

PRELIMINARY SUBDIVISION AND PRD APPLICATION

PRELIMINARY ROAD PROFILES

CITY OF MONROE

SNOHOMISH COUNTY, WA

CLIENT

D.R. HORTON
11241 SLATER AVENUE NE
SUITE 200
KIRKLAND, WA 98033
PHONE: (425) 825-3186

CP|H CONSULTANTS
Site Planning • Civil Engineering
Land Use Consulting • Project Management
11431 Willows Rd. NE, Suite 120
Redmond, WA 98052
Phone: (425) 285-2390 | FAX: (425) 285-2389
www.cphconsultants.com

PROJECT NO. 0035-18-27

DRAWING P3.10

SHEET 9 OF 18

0 5 10 VERT. IN FEET
0 50 100 HORIZ. IN FEET

811 Know what's **below.** **Call** before you dig.

Copyright © 2019 CPH Consultants, LLC. All Rights Reserved.

P:\project\0035\18027\Dwg\Sheets\Preliminary Plat\P3.10.dwg
2/4/2019 5:09 PM PETER EVANS

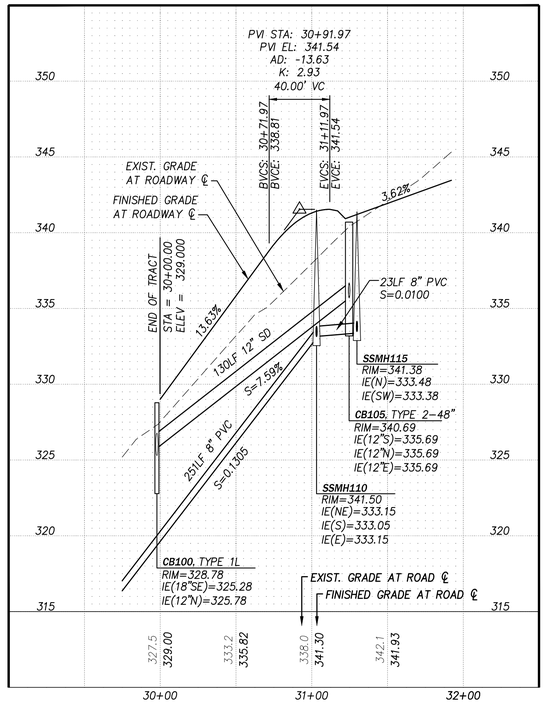

PAT1

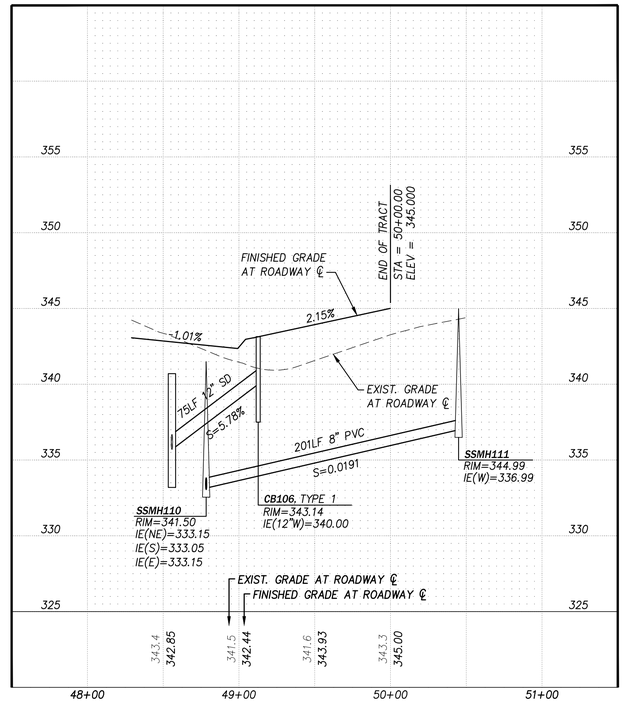

PAT2

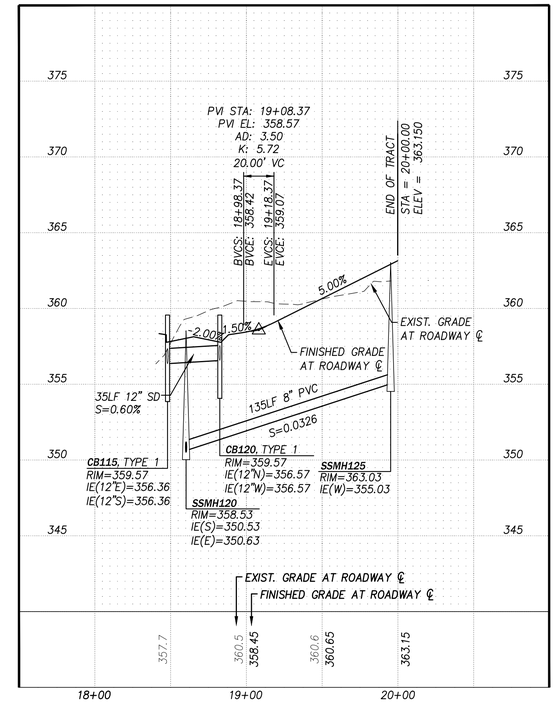

PAT3

NO.	DATE	REVISION	BY	CK.
1	1/31/19	PRELIMINARY PRD SUBMITTAL	CMT	MJH

MATTHEW J. HIRCHE
STATE OF WASHINGTON
36364
REGISTERED PROFESSIONAL ENGINEER
1/31/2019

BELMONT HEIGHTS PRD

PRELIMINARY SUBDIVISION AND PRD APPLICATION

PRELIMINARY ROAD PROFILES

CITY OF MONROE

SNOHOMISH COUNTY, WA

CLIENT

D.R. HORTON
11241 SLATER AVENUE NE
SUITE 200
KIRKLAND, WA 98033
PHONE: (425) 825-3186

0 5 10 VERT. IN FEET
0 50 100 HORIZ. IN FEET

811 Know what's **below.** **Call** before you dig.

Copyright © 2019 CPH Consultants, LLC. All Rights Reserved.

CP|H CONSULTANTS
Site Planning • Civil Engineering
Land Use Consulting • Project Management
11431 Willows Rd. NE, Suite 120
Redmond, WA 98052
Phone: (425) 285-2390 | FAX: (425) 285-2389
www.cphconsultants.com

PROJECT NO. 0035-18-27

DRAWING P3.11

SHEET 10 OF 18

P:\project\0035\18027\Dwg\Sheets\Preliminary Plat\P3.11.dwg
2/4/2019 5:09 PM PETER EVANS

PTN. OF NE 1/4 OF SEC 36, TWP 28 N, R6E W.M.

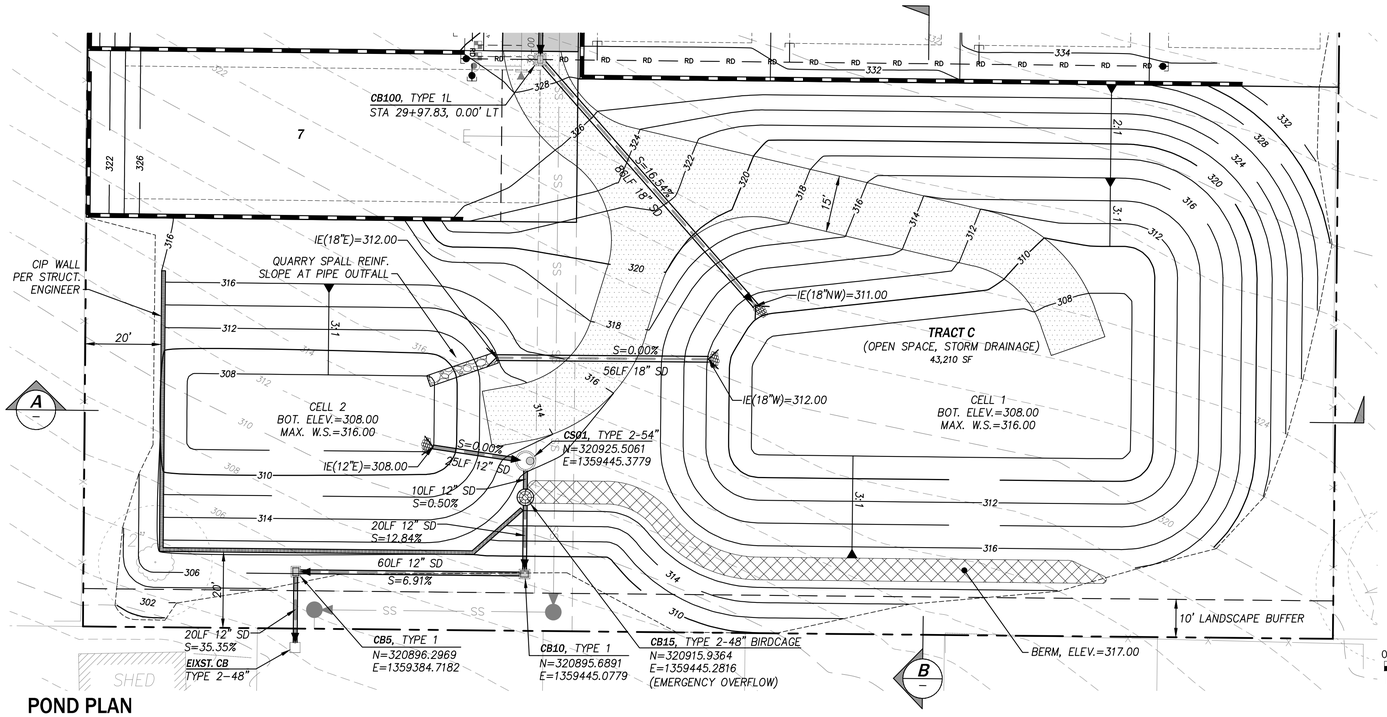

POND PLAN

SCALE: AS NOTED

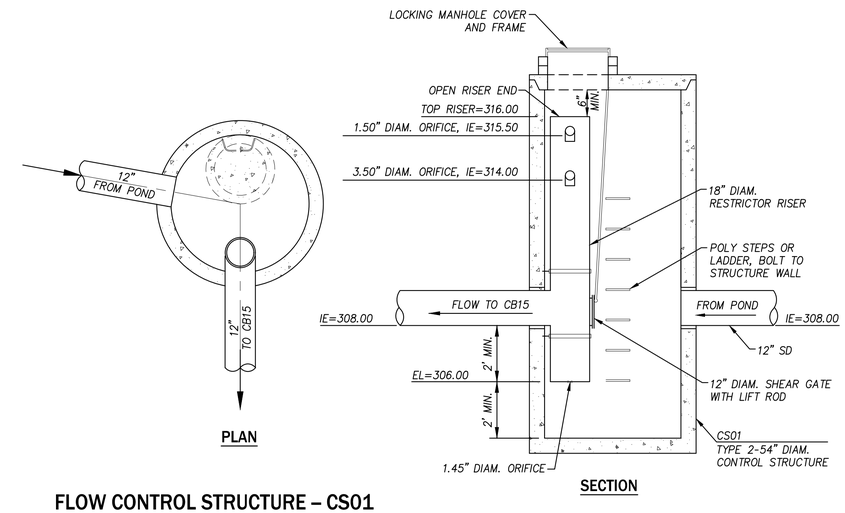

FLOW CONTROL STRUCTURE – CS01

NOT TO SCALE

0 20 40
PLAN IN FEET

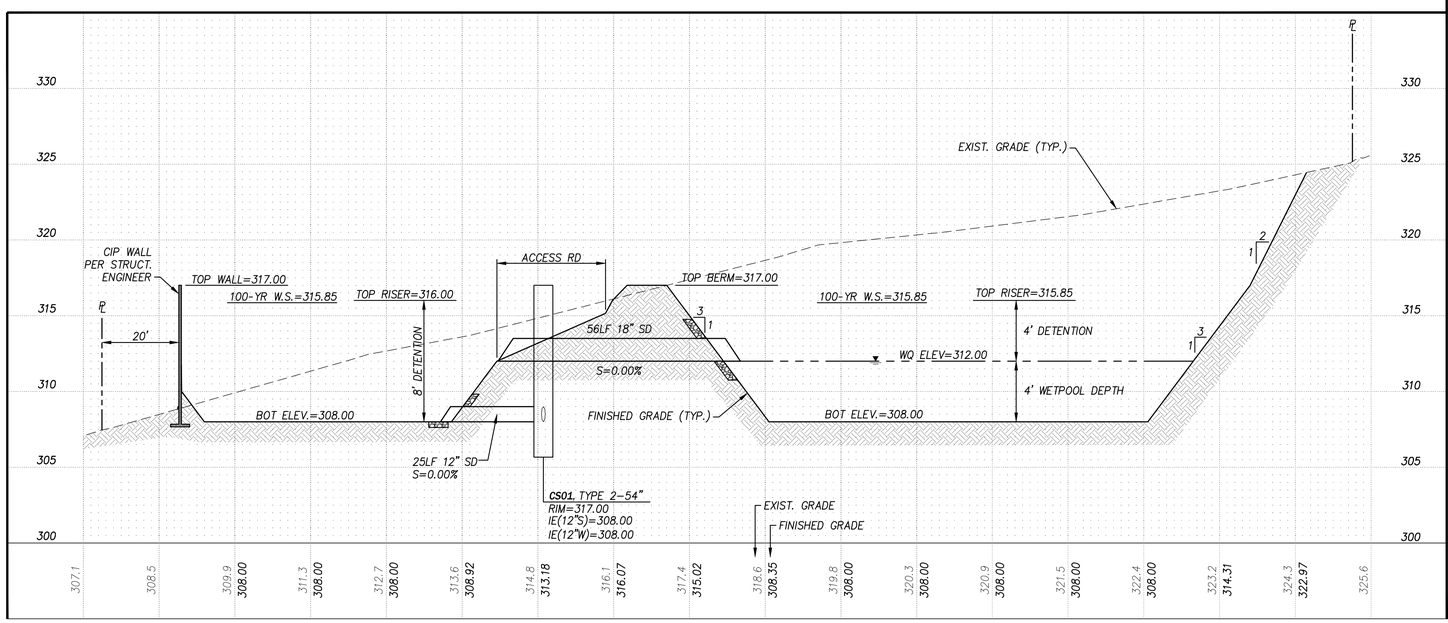

SECTION A

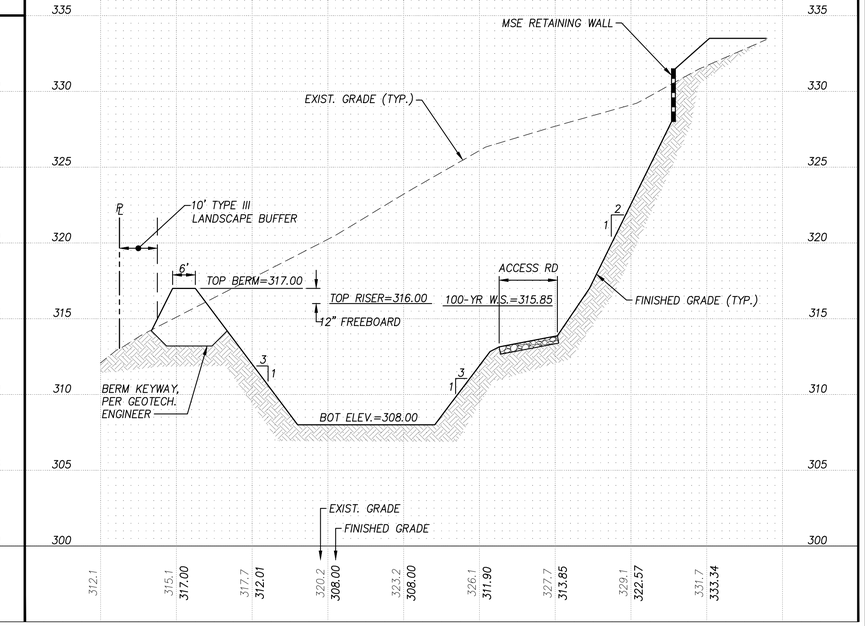

SECTION B

0 5 10
VERT. IN FEET
0 20 40
HORIZ. IN FEET

811 Know what's below. Call before you dig.

Copyright © 2019 CPH Consultants, LLC. All Rights Reserved.

NO.	DATE	REVISION	BY	CK.
1	1/31/19	PRELIMINARY PRD SUBMITTAL	CMT	MJH

MATTHEW J. HEBDEN · STATE OF WASHINGTON · 36364 · REGISTERED PROFESSIONAL ENGINEER · 1/31/2019

BELMONT HEIGHTS PRD

PRELIMINARY SUBDIVISION AND PRD APPLICATION

STORM POND PLAN AND SECTIONS

SNOHOMISH COUNTY, WA

CITY OF MONROE

CLIENT

D.R. HORTON
11241 SLATER AVENUE NE
SUITE 200
KIRKLAND, WA 98033
PHONE: (425) 825-3186

CPH CONSULTANTS
Site Planning • Civil Engineering
Land Use Consulting • Project Management
11431 Willows Rd. NE, Suite 120
Redmond, WA 98052
Phone: (425) 285-2390 | FAX: (425) 285-2389
www.cphconsultants.com

PROJECT NO. 0035-18-27

DRAWING P3.20

SHEET 11 OF 18

P:\project\0035\18027\Dwg\Sheets\Preliminary Plat\P3.20.dwg
2/4/2019 5:10 PM PETER EVANS

PTN. OF NE 1/4 OF SEC 36, TWP 28 N, R6E W.M.

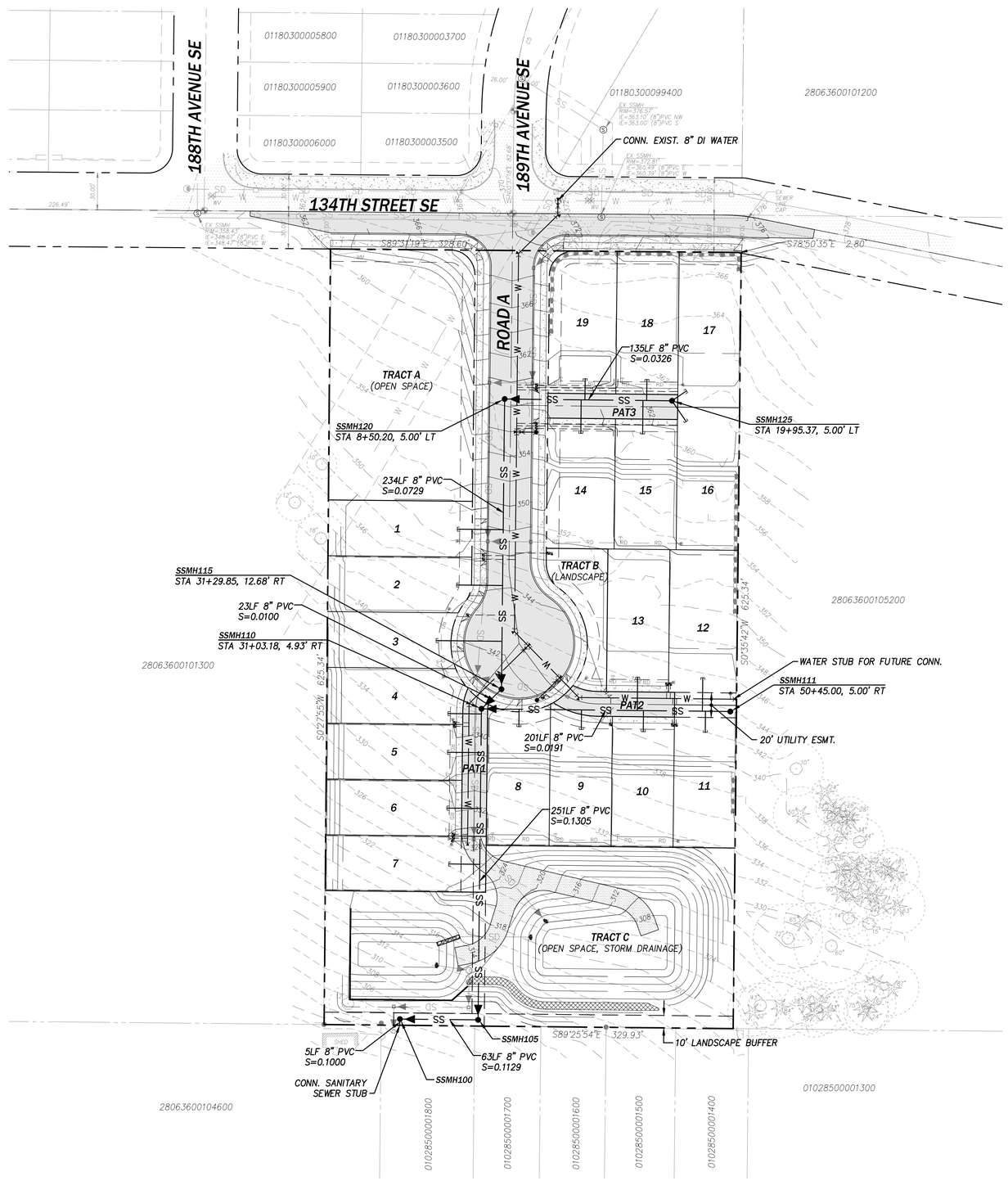

LEGEND

- STORM DRAIN
- TYPE 1 SD CATCH BASIN
- TYPE 2 SD CATCH BASIN
- SANITARY SEWER MAIN
- STANDARD PRECAST SEWER MANHOLE
- SIDE SEWER SERVICE W/CLEANOUT
- WATER MAIN
- WATER SERVICE (PIPE)
- WATER METER
- FIRE HYDRANT (FH)
- GATE VALVE
- BLOWOFF ASSEMBLY

0 50 100
PLAN IN FEET

811 Know what's below. Call before you dig.

Copyright © 2019 CPH Consultants, LLC. All Rights Reserved.

NO.	DATE	REVISION	BY	CK.
1	1/31/19	PRELIMINARY PRD SUBMITTAL	CMT	MJH

MATTHEW J. HOUGH
STATE OF WASHINGTON
REGISTERED PROFESSIONAL ENGINEER
1/31/2019

BELMONT HEIGHTS PRD

PRELIMINARY SUBDIVISION AND PRD APPLICATION

PRELIMINARY UTILITY PLAN

CITY OF MONROE SNOHOMISH COUNTY, WA

CLIENT

D.R. HORTON
11241 SLATER AVENUE NE
SUITE 200
KIRKLAND, WA 98033
PHONE: (425) 825-3186

CPH CONSULTANTS
Site Planning • Civil Engineering
Land Use Consulting • Project Management
11431 Willows Rd. NE, Suite 120
Redmond, WA 98052
Phone: (425) 285-2390 | FAX: (425) 285-2389
www.cphconsultants.com

PROJECT NO. 0035-18-27

DRAWING P6.00

SHEET 12 OF 18

P:\project\0035\18027\Dwg\Sheets\Preliminary Plat\P6.00.dwg
2/4/2019 5:10 PM PETER EVANS

PTN. OF NE 1/4 OF SEC 36, TWP 28 N, R6E W.M.

LEGEND

- COMMON LANDSCAPE AND OPEN SPACE
- PARK AND RECREATION TRACTS

OPEN SPACE AND RECREATION

COMMON LANDSCAPE AND OPEN SPACE:	49,584 SF
PARK AND RECREATION REQUIRED:	
17 DU(BASE DENSITY) x 975 SF/DU=	16,575 SF
PARK AND RECREATION PROVIDED:	
TRACT A	23,498 SF
TOTAL	23,498 SF

NOTE: SEE LANDSCAPE PLANS FOR PARK AND RECREATION AREA PLANTING AND AMENITY DETAILS.

NO.	DATE	REVISION	BY	CK.
1	1/31/19	PRELIMINARY PRD SUBMITTAL	CMT	MJH

MATTHEW J. HIRCH — STATE OF WASHINGTON — 36364 — REGISTERED PROFESSIONAL ENGINEER — 1/31/2019

BELMONT HEIGHTS PRD

PRELIMINARY SUBDIVISION AND PRD APPLICATION

PARK, RECREATION AND OPEN SPACE PLAN

CITY OF MONROE — SNOHOMISH COUNTY, WA

CLIENT

D.R. HORTON
11241 SLATER AVENUE NE
SUITE 200
KIRKLAND, WA 98033
PHONE: (425) 825-3186

CP|H CONSULTANTS
Site Planning • Civil Engineering
Land Use Consulting • Project Management
11431 Willows Rd. NE, Suite 120
Redmond, WA 98052
Phone: (425) 285-2390 | FAX: (425) 285-2389
www.cphconsultants.com

PROJECT NO. 0035-18-27

DRAWING P7.00

SHEET 13 OF 18

0 50 100
PLAN IN FEET

811 Know what's below. Call before you dig.

Copyright © 2019 CPH Consultants, LLC. All Rights Reserved.

P:\project\0035\18027\Dwg\Sheets\Preliminary Plat\P7.00.dwg
2/4/2019 5:10 PM PETER EVANS

PTN. OF NE ¼ OF SEC 36, TWP 28 N, R6E W.M.

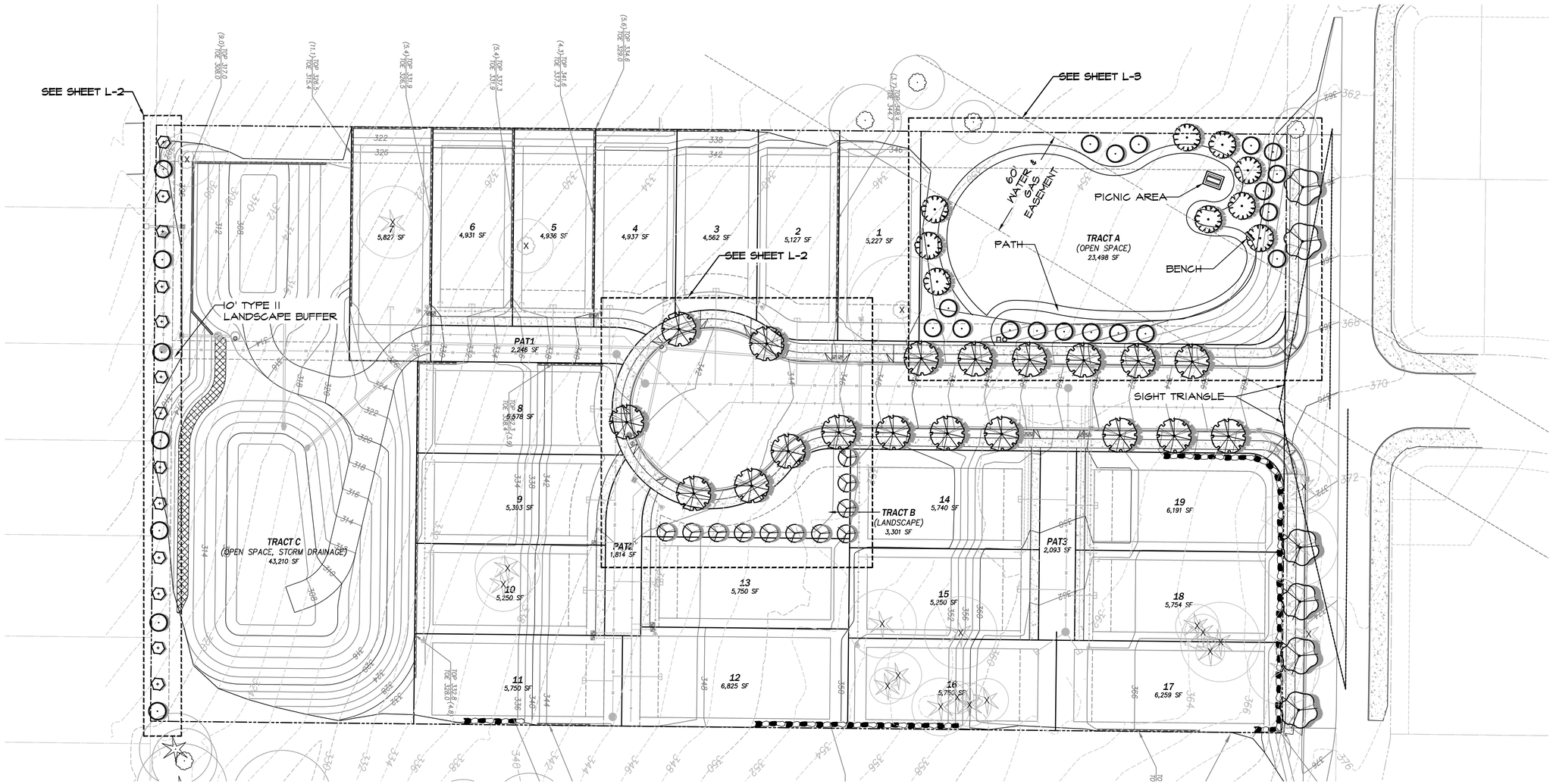

PLANT SCHEDULE ENTIRE SITE

DECIDUOUS TREES	BOTANICAL NAME / COMMON NAME	SIZE	QTY
	Acer circinatum / Vine Maple	1.5"Cal	13
	Acer rubrum 'Bowhall' / Bowhall Maple	1.5" Cal.	11
	Cercidiphyllum japonicum / Katsura Tree	1.5"Cal	9
EVERGREEN TREES	**BOTANICAL NAME / COMMON NAME**	**SIZE**	**QTY**
	Thuja plicata 'Excelsa' / Excelsa Cedar	6'-8' Ht	25
STREET TREE	**BOTANICAL NAME / COMMON NAME**	**SIZE**	**QTY**
	Pyrus calleryana 'Capital' / Capital Callery Pear	2"Cal	19
	Zelkova serrata 'Musashino' / Musashino Zelkova	2"Cal	6

LANDSCAPE PLAN
SCALE: 1" = 30' - 0"

GRAPHIC SCALE
-30 0 15 30 60
(IN FEET)
1 inch = 30 feet

IRRIGATION PLAN NOTE:

PARK AND OTHER MAINTAINED LANDSCAPE AREAS WITHIN THE PROJECT, INCLUDING PLANTER STRIP AREAS, SHALL BE IRRIGATED IN ACCORDANCE WITH APPLICABLE CITY OF MONROE MUNICIPAL CODE (MMC) AND PUBLIC WORKS STANDARDS. COMPLETE IRRIGATION PLANS AND SYSTEM DETAILS CONFORMING WITH THE PROVISIONS OF MMC 18.18.060 WILL BE SUBMITTED TO THE CITY FOR REVIEW AND APPROVAL WITH THE FINAL ENGINEERING PERMIT SUBMITTAL.

Drawn: E.K.
Created: 1/31/19

CRAMER DESIGN CONSULTANTS, INC.
LANDSCAPE ARCHITECT
1909 242ND STREET SE
BOTHELL, WA 98021
425-241-6258

STATE OF WASHINGTON REGISTERED LANDSCAPE ARCHITECT
KYLE L. CRAMER
CERTIFICATE NO. 634

BELMONT HEIGHTS
18830 134TH STREET SE
MONROE WASHINGTON

SHEET
L-1
OF 5 SHEETS

PTN. OF NE ¼ OF SEC 36, TWP 28 N, R6E W.M.

IRRIGATION PLAN NOTE:

PARK AND OTHER MAINTAINED LANDSCAPE AREAS WITHIN THE PROJECT,
INCLUDING PLANTER STRIP AREAS, SHALL BE IRRIGATED IN ACCORDANCE WITH APPLICABLE CITY OF MONROE MUNICIPAL CODE (MMC) AND PUBLIC WORKS STANDARDS. COMPLETE IRRIGATION PLANS AND SYSTEM DETAILS CONFORMING WITH THE PROVISIONS OF MMC 18.78.060 WILL BE SUBMITTED TO THE CITY FOR REVIEW AND APPROVAL WITH THE FINAL ENGINEERING PERMIT SUBMITTAL.

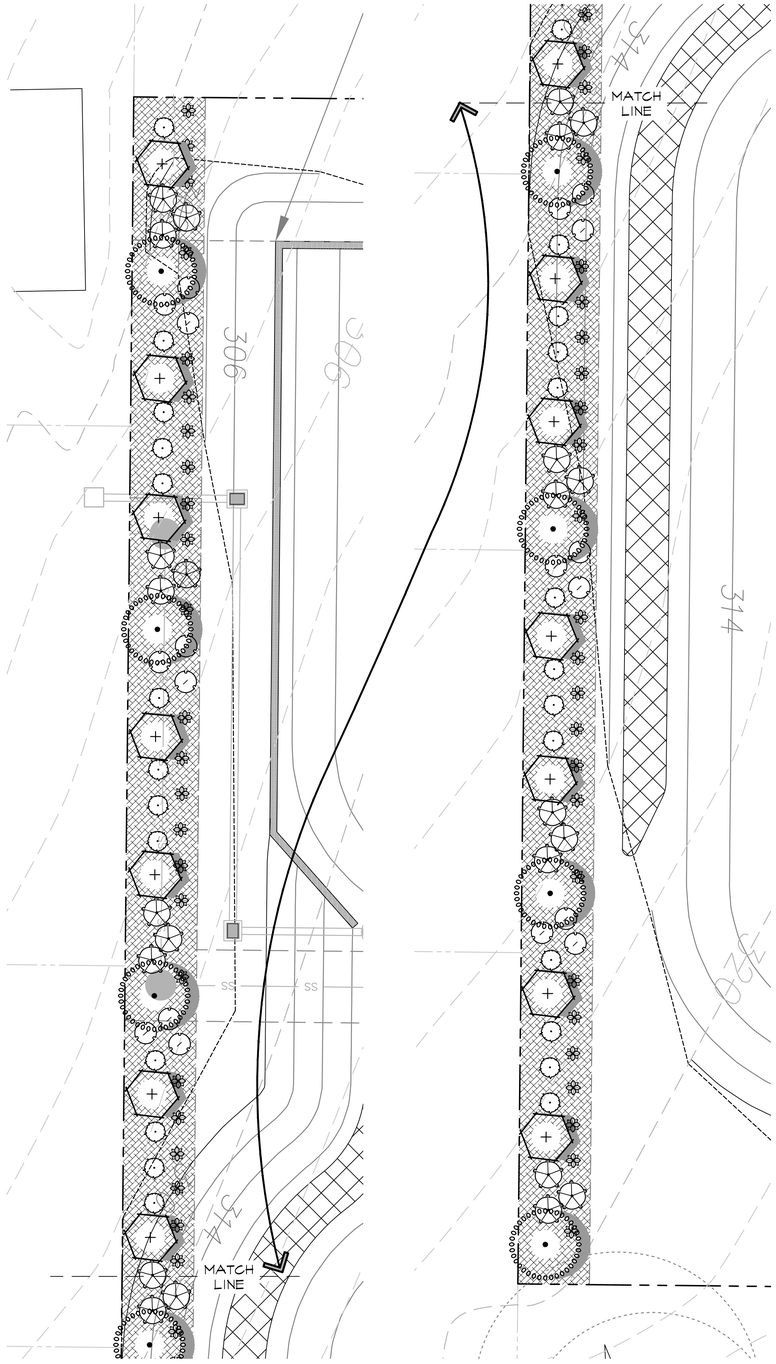

LANDSCAPE BUFFER PLAN
SCALE: 1" = 10' - 0"

GRAPHIC SCALE
-10 0 5 10 20
(IN FEET)
1 inch = 10 feet

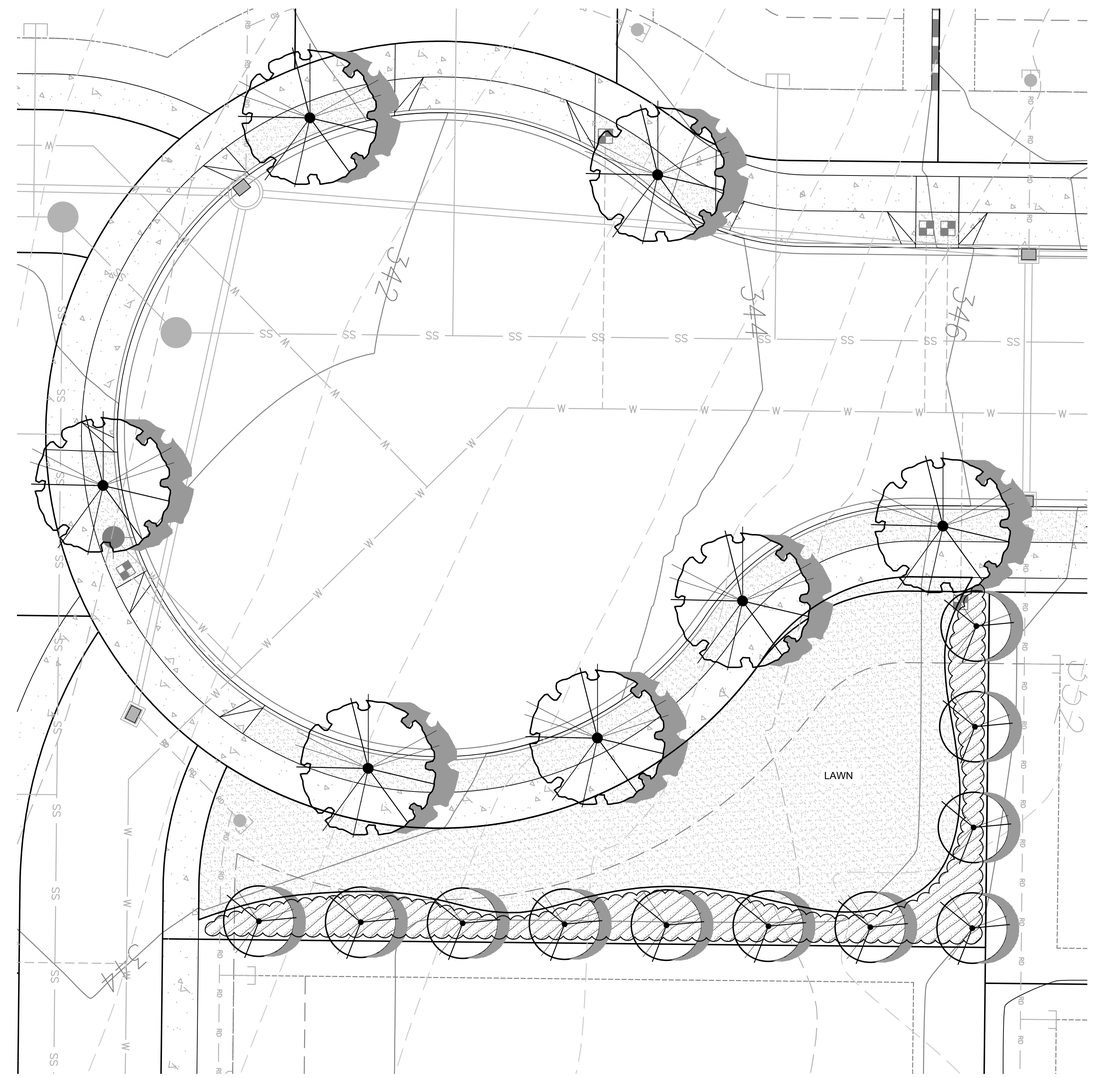

TRACT B LANDSCAPE PLAN
SCALE: 1" = 10' - 0"

GRAPHIC SCALE
-10 0 5 10 20
(IN FEET)
1 inch = 10 feet

Created: 1/31/19
Drawn: ELK.

CRAMER DESIGN CONSULTANTS, INC.
LANDSCAPE ARCHITECT
1909 242ND STREET SE
BOTHELL, WA 98021
425-241-6258

STATE OF WASHINGTON REGISTERED LANDSCAPE ARCHITECT
LOYLE L. CRAMER
CERTIFICATE NO. 634

BELMONT HEIGHTS
18830 134TH STREET SE
MONROE WASHINGTON

SHEET
L-2
OF 5 SHEETS

PTN. OF NE $\frac{1}{4}$ OF SEC 36, TWP 28 N, R6E W.M.

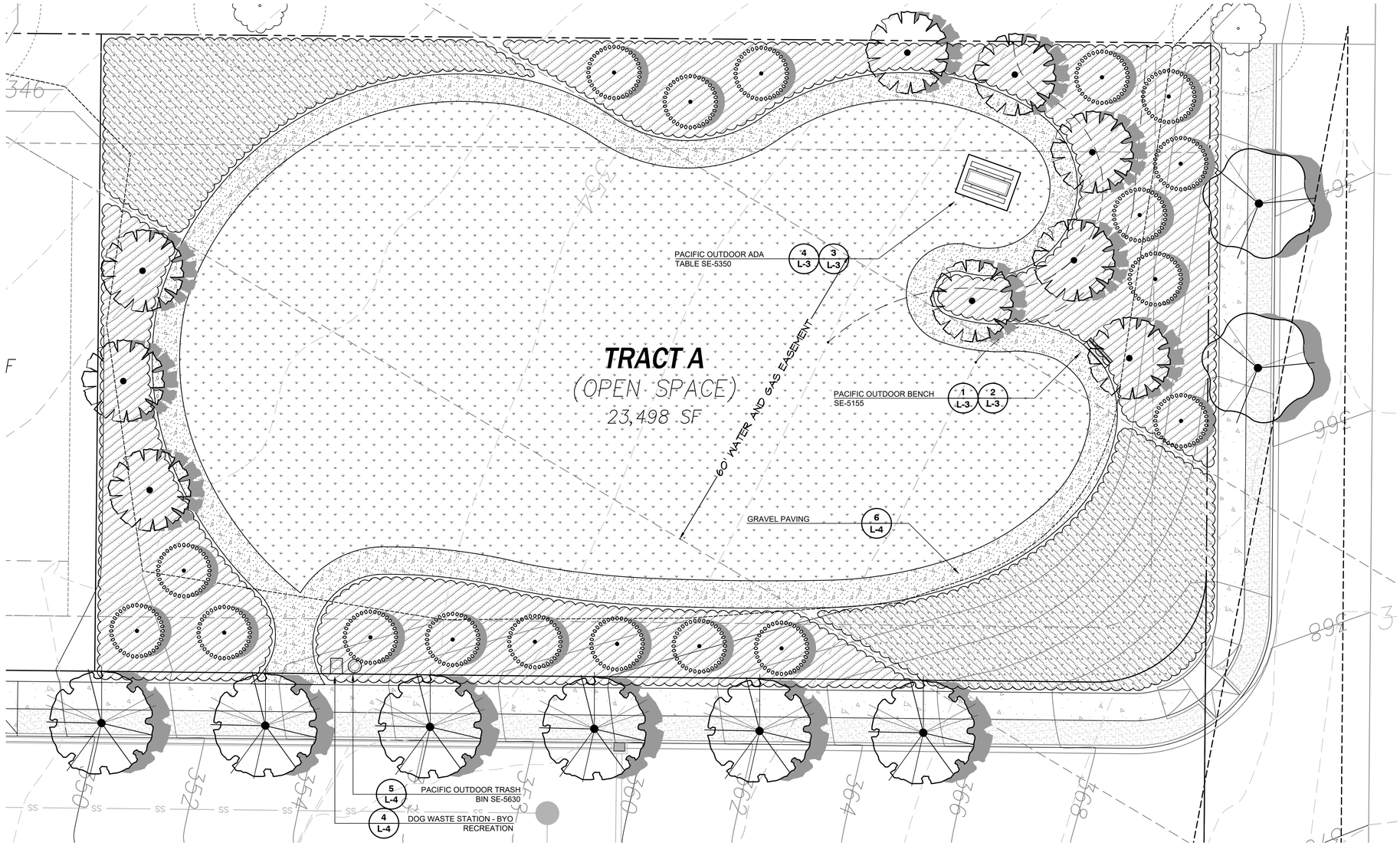

IRRIGATION PLAN NOTE:

PARK AND OTHER MAINTAINED LANDSCAPE AREAS WITHIN THE PROJECT,
INCLUDING PLANTER STRIP AREAS, SHALL BE IRRIGATED IN ACCORDANCE WITH APPLICABLE CITY OF MONROE MUNICIPAL CODE (MMC) AND PUBLIC WORKS STANDARDS. COMPLETE IRRIGATION PLANS AND SYSTEM DETAILS CONFORMING WITH THE PROVISIONS OF MMC 18.78.060 WILL BE SUBMITTED TO THE CITY FOR REVIEW AND APPROVAL WITH THE FINAL ENGINEERING PERMIT SUBMITTAL.

TRACT A LANDSCAPE PLAN
SCALE: 1" = 10' - 0"

GRAPHIC SCALE

-10 0 5 10 20

(IN FEET)
1 inch = 10 feet

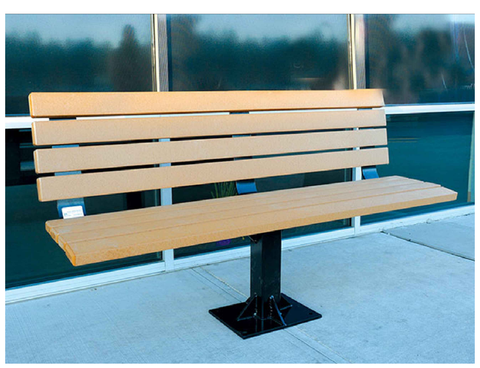

1 PACIFIC OUTDOOR BENCH SE-5155

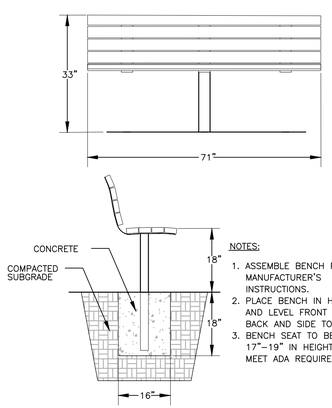

NOTES:
1. ASSEMBLE BENCH PER MANUFACTURER'S INSTRUCTIONS.
2. PLACE BENCH IN HOLE AND LEVEL FRONT TO BACK AND SIDE TO SIDE.
3. BENCH SEAT TO BE 17"–19" IN HEIGHT TO MEET ADA REQUIREMENTS.

2 IN-GROUND BENCH INSTALLATION
NTS

3 PACIFIC OUTDOOR ADA TABLE SE-5350

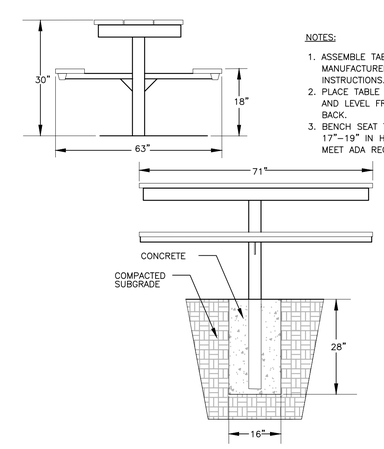

NOTES:
1. ASSEMBLE TABLE PER MANUFACTURER'S INSTRUCTIONS.
2. PLACE TABLE IN HOLE AND LEVEL FRONT TO BACK.
3. BENCH SEAT TO BE 17"–19" IN HEIGHT TO MEET ADA REQUIREMENTS.

4 IN-GROUND TABLE INSTALLATION
NTS

Drawn: E.K.
Created: 1/31/19

CRAMER DESIGN CONSULTANTS, INC.
LANDSCAPE ARCHITECT
1909 242ND STREET SE
BOTHELL, WA 98021
425-241-6258

STATE OF WASHINGTON
REGISTERED
LANDSCAPE ARCHITECT
LOYLE L. CRAMER
CERTIFICATE NO. 634

BELMONT HEIGHTS
18830 134TH STREET SE
MONROE WASHINGTON

SHEET
L-3
OF 5 SHEETS

IRRIGATION PLAN NOTE:

PARK AND OTHER MAINTAINED LANDSCAPE AREAS WITHIN THE PROJECT,
INCLUDING PLANTER STRIP AREAS, SHALL BE IRRIGATED IN ACCORDANCE WITH APPLICABLE CITY OF MONROE MUNICIPAL CODE (MMC) AND PUBLIC WORKS STANDARDS. COMPLETE IRRIGATION PLANS AND SYSTEM DETAILS CONFORMING WITH THE PROVISIONS OF MMC 18.78.060 WILL BE SUBMITTED TO THE CITY FOR REVIEW AND APPROVAL WITH THE FINAL ENGINEERING PERMIT SUBMITTAL.

1 DOG WASTE STATION - BYO RECREATION
NTS

2 PACIFIC OUTDOOR TRASH BIN SE-5630

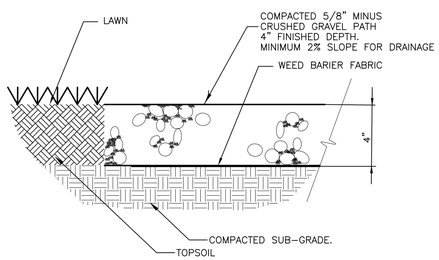

3 GRAVEL PAVING
NTS

INSTALLATION SEQUENCE:

1. Prepare base and subgrade
2. Trench to appropriate depth for installation of root barrier so that top of barrier is 2" (5cm) below finish grade of top of curb.
3. Place root barrier in trench, vertical ribs must face toward tree roots.
4. Backfill and compact to requirements.

For additional information please visit our website at www.deeproot.com

For information regarding distributors please call: 1 800 ILV ROOT (458.7668). For help with drainage or other difficult installation questions please call DeepRoot Technical Support at: 1 800 ROOT TEK (766.8835).

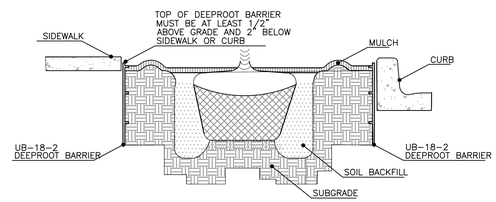

4 18" TREE ROOT BARRIER FOR PLANTING STRIP
NTS

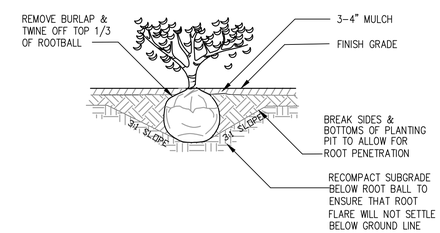

5 TYPICAL SHRUB PLANTING DETAIL
NTS

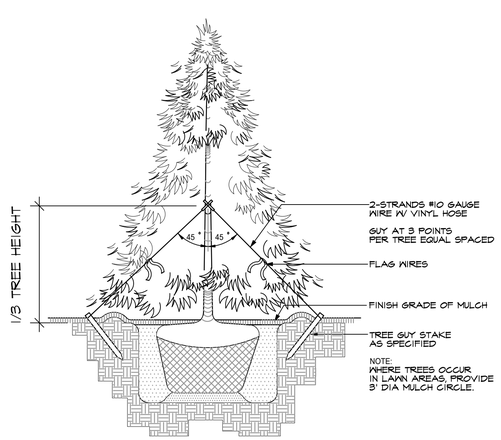

6 TYPICAL EVERGREEN TREE PLANTING DETAIL
NTS

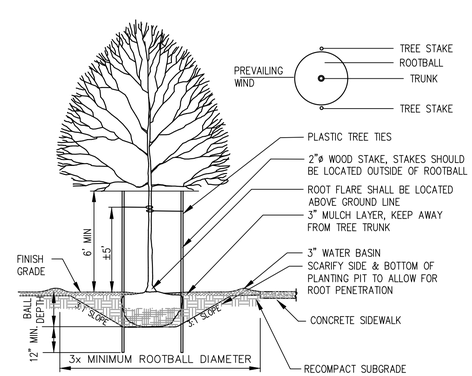

NOTES:

1. TREE PIT SHALL NOT BE LESS THAN (3) TIMES ROOT BALL DIA.
2. CUT ALL TIES AND FOLD BACK BURLAP FROM UPPER 1/3 OF ROOT BALL
3. REMOVE ALL PLASTIC AND TWINE
4. TREE STAKES PERPENDICULAR TO THE PREVAILING WIND
5. PLANT TREES 2" HIGHER THAN DEPTH GROWN IN NURSERY

7 TYPICAL DECIDUOUS TREE PLANTING DETAIL
NTS

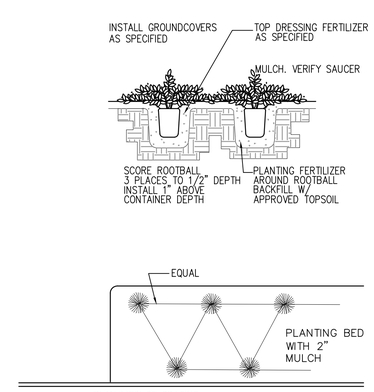

8 TYPICAL GROUNDCOVER PLANTING DETAIL
NTS

Drawn: E.K.
Created: 1/31/19

CRAYER DESIGN CONSULTANTS, INC.
LANDSCAPE ARCHITECT
1909 242ND STREET SE
BOTHELL, WA 98021
425-241-6258

STATE OF
WASHINGTON
REGISTERED
LANDSCAPE ARCHITECT
LYLE L. CRAMER
CERTIFICATE NO. 634

BELMONT HEIGHTS
18830 134TH STREET SE
MONROE WASHINGTON

SHEET
L-4
OF 5 SHEETS

PLANT SCHEDULE 10' BUFFER

DECIDUOUS TREES	BOTANICAL NAME / COMMON NAME	SIZE		QTY
	Acer circinatum / Vine Maple	1.5"Cal		13
EVERGREEN TREES	**BOTANICAL NAME / COMMON NAME**	**SIZE**		**QTY**
	Thuja plicata 'Excelsa' / Excelsa Cedar	6'-8' Ht		7
SHRUBS	**BOTANICAL NAME / COMMON NAME**	**SIZE**		**QTY**
	Cornus sericea 'Elegantissima' / Variegated Redtwig Dogwood	18" Ht. min.		21
	Mahonia aquifolium 'Compacta' / Compact Oregon Grape	18" Ht. min.		25
	Polystichum munitum / Western Sword Fern	12" Ht. min.		46
	Symphoricarpos x 'Bokrabright' / Bright Fantasy Snowberry	18" Ht. min.		18
GROUND COVERS	**BOTANICAL NAME / COMMON NAME**	**SIZE**	**SPACING**	**QTY**
	Arctostaphylos uva-ursi / Kinnikinnick	1 gal	36" o.c.	270

PLANT SCHEDULE STREET TREE & PLANTING STRIP

STREET TREE	BOTANICAL NAME / COMMON NAME	SIZE		QTY
	rus calleryana 'Capital' / Capital Callery Pear	2"Cal		19
	Zelkova serrata 'Musashino' / Musashino Zelkova	2"Cal		6
LAWN	**BOTANICAL NAME / COMMON NAME**	**SIZE**	**SPACING**	**QTY**
	Lawn	sod		3,986 sf

IRRIGATION PLAN NOTE:

PARK AND OTHER MAINTAINED LANDSCAPE AREAS WITHIN THE PROJECT,
INCLUDING PLANTER STRIP AREAS, SHALL BE IRRIGATED IN ACCORDANCE WITH APPLICABLE CITY OF MONROE MUNICIPAL CODE (MMC) AND PUBLIC WORKS STANDARDS. COMPLETE IRRIGATION PLANS AND SYSTEM DETAILS CONFORMING WITH THE PROVISIONS OF MMC 18.78.060 WILL BE SUBMITTED TO THE CITY FOR REVIEW AND APPROVAL WITH THE FINAL ENGINEERING PERMIT SUBMITTAL.

PLANT SCHEDULE TRACT A

DECIDUOUS TREES	BOTANICAL NAME / COMMON NAME	SIZE		QTY
	Cercidiphyllum japonicum / Katsura Tree	1.5"Cal		9
EVERGREEN TREES	**BOTANICAL NAME / COMMON NAME**	**SIZE**		**QTY**
	Thuja plicata 'Excelsa' / Excelsa Cedar	6'-8' Ht		18
LANDSCAPE	**BOTANICAL NAME / COMMON NAME**	**SIZE**	**SPACING**	**QTY**
	Groundcover Only	---		2,984 sf
	Shrubs and Groundcovers	---		5,889 sf
SEED	**BOTANICAL NAME / COMMON NAME**	**SIZE**	**SPACING**	**QTY**
	Sun & Shade Lawn Blend JB Sod 70% Perennial Ryegrass 30% Fine Fescue Apply April - Oct with Irrigation 7 lbs per 1,000 sq ft	Hydroseed		11,726 sf
SITE	**BOTANICAL NAME / COMMON NAME**	**SIZE**	**SPACING**	**QTY**
	5/8 (-) Crushed Rock	N/A		2,637 sf

PLANT SCHEDULE TRACT B

DECIDUOUS TREES	BOTANICAL NAME / COMMON NAME	SIZE		QTY
	Acer rubrum 'Bowhall' / Bowhall Maple	1.5" Cal.		11
LANDSCAPE	**BOTANICAL NAME / COMMON NAME**	**SIZE**	**SPACING**	**QTY**
	Shrubs and Groundcovers	---		700 sf
LAWN	**BOTANICAL NAME / COMMON NAME**	**SIZE**	**SPACING**	**QTY**
	Lawn	sod		2,320 sf

LANDSCAPE NOTES

1. CONTRACTOR SHALL BE RESPONSIBLE FOR FAMILIARIZING THEMSELVES WITH ALL OTHER SITE IMPROVEMENTS AND CONDITIONS PRIOR TO STARTING LANDSCAPE WORK.

2. CONTRACTOR SHALL USE CAUTION WHILE EXCAVATING TO AVOID DISTURBING ANY UTILITIES ENCOUNTERED. CONTRACTOR IS TO PROMPTLY ADVISE OWNER OF ANY DISTURBED UTILITIES. LOCATION SERVICE PHONE 1-800-424-5555.

3. CONTRACTOR SHALL MAINTAIN AND WATER ALL PLANT MATERIAL FOR 1 YEAR OR UNTIL FINAL INSPECTION AND ACCEPTANCE BY OWNER.

4. CONTRACTOR SHALL BE RESPONSIBLE FOR PROVIDING QUANTITIES OF PLANTS THAT ARE REPRESENTED BY SYMBOLS ON THE DRAWING.

5. SUBGRADE IS TO BE WITHIN $\frac{1}{10}$ INCH OF 1 FOOT AS PROVIDED BY OTHERS. ALL PLANTING AREAS TO BE CLEARED OF ALL CONSTRUCTION MATERIAL AND ROCKS & STICKS LARGER THAN 2 INCH DIAMETER.

6. 4 INCH DEPTH TOPSOIL IN LANDSCAPE AREA.

7. 2 INCH DEPTH, 3 FOOT DIAMETER BARK RING AROUND BASE OF STREET TREES AND OTHER TREES LOCATED IN LAWN.

8. TREES SHOULD BE PLANTED SO THAT THE CENTER OF EACH TRUNK IS 3 FEET FROM THE BACK OF CURB OR IF PLANTED BEHIND A SIDEWALK 3 FEET FROM THE BACK OF A SIDEWALK WHERE TREES ARE TO BE PLANTED ADJACENT TO A SIDEWALK.

9. GROUND COVERS SHALL BE PLANTED IN AN EQUILATERAL TRIANGULAR SPACING PATTERN AT THE ON-CENTER DISTANCES SHOWN ON THE PLAN OR IN THE PLANT SCHEDULE. WHERE GROUND COVER ABUTS CURBING, SIDEWALKS, SIGNS OR POLES, MINIMUM PLANTING DISTANCES SHALL BE 12" FROM CENTER OF PLANT TO CURB, SIDEWALK, ETC. MINIMUM PLANTING DISTANCE SHALL BE 24" FROM CENTER OF TREES AND SHRUBS.

10. ALL PLANT MATERIAL SHALL BE FERTILIZED WITH AGRO TRANSPLANT FERTILIZER 4-2-2 PER MANUFACTURERS SPECIFICATIONS.

11. ALL PLANT MATERIAL SHALL CONFORM TO AAN STANDARDS FOR NURSERY STOCK LATEST EDITION. ALL PLANT MATERIAL FURNISHED SHALL BE HEALTHY REPRESENTATIVES, TYPICAL OF THEIR SPECIES OF VARIETY AND SHALL HAVE A NORMAL GROWTH HABIT. THEY SHALL BE FULL, WELL BRANCHED, WELL PROPORTIONED, AND HAVE A VIGOROUS, WELL DEVELOPED ROOT SYSTEM. ALL PLANTS SHALL BE HARDY UNDER CLIMATIC CONDITIONS SIMILAR TO THOSE IN THE LOCALITY OF THE PROJECT. TREES, SHRUBS AND GROUNDCOVER QUANTITIES, SPECIES, VARIETIES, SIZES AND CONDITIONS TO BE AS SHOWN ON THE PLANTING PLAN. PLANTS TO BE FREE OF DISEASE, INJURY, INSECTS, DECAY, HARMFUL DEFECTS AND ALL WEEDS. NO SUBSTITUTIONS SHALL BE MADE WITHOUT WRITTEN APPROVAL FROM LANDSCAPE ARCHITECT OR OWNER.

12. IRRIGATION PLANS FOR PARK AND MAINTAINED LANDSCAPE AREAS, INCLUDING PLANTER STRIP AREAS, WILL BE PROVIDED WITH FINAL ENGINEERING REVIEW PLAN SET FOR CITY REVIEW AND APPROVAL (SEE LANDSCAPE PLAN NOTE).

13. TREES TO BE PLANTED MINIMUM 5 FEET FROM PROJECT BOUNDARIES.

14. THE AVERAGE SPACING FOR STREET TREES SHOULD BE 30 FEET ON CENTER AND ADJUSTED TO ALLOW FOR SIGHT LINES, UTILITIES, TRAFFIC SIGNS, LIGHT STANDARDS, DRIVEWAYS AND OTHER STREET APPURTENANCES.

15. DO NOT PLANT STREET TREES WITHIN TWENTY FEET OF STREET LIGHTS.

16. LANDSCAPING SHALL BE PLANTED AND MAINTAINED IN A MANNER SO AS TO PROVIDE 36" CLEARANCE AROUND THE CIRCUMFERENCE OF FIRE HYDRANTS.

17. PROVIDE UB-18-2 DEEP ROOT BARRIER ADJACENT TO SIDEWALK AND CURB WITHIN PLANTER STRIPS. PROVIDE ROOT BARRIER BETWEEN TREE AND DRIVEWAY APRONS, WATER METERS AND FIRE HYDRANTS WHERE DISTANCE IS LESS THAN 8'. ROOT BARRIER IS TO BE 16' IN LENGTH WITH TREE CENTERED ON THIS LENGTH.

Drawn: E.K.
Created: 1/31/19

CRAMER DESIGN CONSULTANTS, INC.
LANDSCAPE ARCHITECT
1909 242ND STREET SE
BOTHELL, WA 98021
425-241-6258

STATE OF WASHINGTON
REGISTERED
LANDSCAPE ARCHITECT
KYLE L. CRAMER
CERTIFICATE NO. 634

BELMONT HEIGHTS
18830 134TH STREET SE
MONROE WASHINGTON

SHEET
L-5
OF 5 SHEETS