Drainage Report
Kestrel Ridge
PFN: M2018-

for

Prospect Development, LLC
Attn: Mark Holland
2913 5th Ave NE
Puyallup, WA 98372

SITE LOCATION:
13217 & 13305 Chain Lake Rd
Monroe, WA 98272

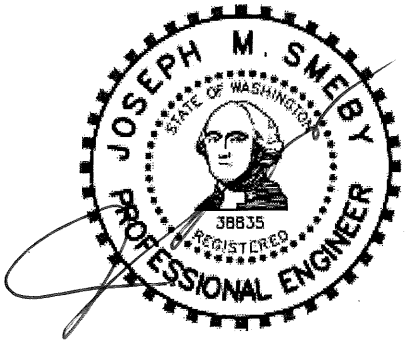

Prepared by:
Joseph M. Smeby, P.E.

Job No: 18-0614
July 2018

TABLE OF CONTENTS

ITEM **PAGE**

TABLE OF CONTENTS 1

LIST OF FIGURES 2

1. INTRODUCTION 3

2. DRAINAGE INFORMATION SUMMARY FORM 4

3. EXISTING SITE CHARACTERISTICS and ASSUMPTIONS 6

4. NARRATIVE OF DEVELOPED SITE CHARACTERISTICS 7
   - A. DOE Minimum Requirements 8

5. DESCRIPTION OF PROPOSED EROSION CONTROL BMP'S 8
   - A. Erosion Control Risk Assessment 9
   - B. SWPPP Minimum Elements 10

6. OFFSITE DRAINAGE ANALYSIS - UPSTREAM 10

7. OFFSITE DRAINAGE ANALYSIS - DOWNSTREAM 10

8. DETENTION STORAGE CALCULATIONS 12
   - A. SUMMARY OF DETENTION CALCULATION RESULTS 13
   - B. SCS CURVE NUMBER CALCULATION 13

9. WATER QUALITY DESIGN 14

10. CONVEYANCE CALCULATIONS 14

11. MAINTENANCE AND OPERATIONS MANUAL 14

APPENDIX A - STORMWATER CALCULATION A-1

APPENDIX B – OPERATIONS AND MAINTENANCE MANUAL B-1

APPENDIX C – GEOTECHNICAL REPORT C-1

LIST OF FIGURES

ITEM **PAGE**

FIGURE 1 VICINITY MAP 15

FIGURE 2 EXISTING DRAINAGE BASIN MAP 16

FIGURE 3 DEVELOPED DRAINAGE BASIN MAP 17

FIGURE 4 SNOHOMISH COUNTY SOILS MAP 19

FIGURE 5 UPSTREAM/DOWNSTREAM TRIBUTARY AREA MAP 20

1. INTRODUCTION

This document is intended to provide the preliminary engineering information necessary to support the construction plan application to the City of Monroe for the 31 lot sub-division proposed on this site. The site covers 14.05 acres, all of which will be cleared as a result of this project. Improvements to the north side of Chain Lake Rd along this projects frontage along with new internal roads and a new road connection to the east for 132nd St SE will be part of the application.

This project proposes to construct new public roads within the plat to serve the future lots. In addition, frontage improvements along the north side of Chain Lake Rd including new pavement, curb, planter and sidewalk will be constructed along the south side of the plat. This project will require the construction of driveways for each future lot, stormwater facilities and other utilities. The existing on-site soils are silty sand with a shallow water table at 1-2' so infiltration will not be viable for this project. The proposed detention system will provide detention while a Contech Storm Filter will provide the required water quality treatment.

2. DRAINAGE INFORMATION SUMMARY FORM

Project: **Kestrel Ridge**
PFN: **M2018-**
Engineer: **Omega Engineering, Inc.**
2707 Wetmore Ave
Everett, WA 98201
Attention: Joseph Smeby, P.E.

Total site area: **11.40 acres**
Offsite area: **0.12 acres**
Disturbed area: **9.00 acres**

Applicant: **Prospect Development, LLC**
2913 5th Ave NE
Puyallup, WA 98372

Number of lots/Bldg: **31**

Drainage Basin Information	**East Basin**
On-site Developed Area	4.05 acres
Off-site Improved Area	0.40 acres
Types of storage proposed	Detention Pond
Approximate total storage volume	160,736 cf per calc
Soil Types	Type C
Basin Data	
Pre-developed run-off rates: 2-year	0.30 cfs
50-year	0.88 cfs
Post-developed run-off rates: 2-year	0.15 cfs
50-year	0.42 cfs

3. EXISTING SITE CHARACTERISTICS and ASSUMPTIONS

The site is located north of Chain Lake Rd and east of Brown Road, and in Section 31, Township 28N, Range 7E, Willamette Meridian. See Figure 1 - Vicinity Map. The entire property consists of multiple lots totaling 4.05 acres.

Land use around the site is single-family residential. This site currently contains some single-family buildings which are to be removed as a result of this project. Frontage improvements will be required along Chain Lake Road which will include pavement widening, curb, gutter, planter and sidewalk

The existing site is irregular in shape approximately 1,000-feet long running east-west and 173 to 470-feet running north-south. The grades on the site are moderate. The vegetation found on the existing property is a mixture of landscaping including grasses and shrubs and some large trees.

Grades on the site generally run from northwest to southeast. The existing soils on this site are sandy loam, which is considered Till. Please refer to the attached geotechnical report in Appendix C for further discussion of the existing on-site soils. A site visit was conducted on July 10, 2018. The weather was clear with temperatures in the 70's. No surface water was observed on this site.

The soil hydrologic types for this site have been identified as Type C or Till from the Snohomish County Soil Survey Map, see figure 5. The soil type mapped for this site is Tokul gravelly loam. Soil tests on this site found weathered till under 6" of topsoil. With groundwater at 1-2'. Refer to Geotechnical Report in Appendix C. The project Geotech therefore has not recommended that infiltration be used for this project.

4. NARRATIVE OF DEVELOPED SITE CHARACTERISTICS

This development proposes to create 31 new lots. The detention system will be designed in the southeast corner of the project in Tract 999. This is near the natural downstream discharge location for the site.

The areas to be developed/disturbed will be collected in the on-site conveyance system and directed to Tract 999 for treatment and detention. The storm drainage system for this project has been designed to collect, treat and detain all of the new landscaping and impervious areas on this site. The off-site new impervious areas within Chain Lake Rd will be collected to the maximum extent feasible as well and conveyed to the vault for treatment and flow control.

The detention and water quality system has been designed using the WWHM2012 software and meet the current State and City standards.

4A. DOE MINIMUM REQUIREMENTS

MINIMUM REQUIREMENT #1: PREPARATION OF STORMWATER SITE PLANS

This project proposes to construct new impervious surfaces in excess of the minimum threshold so a stormwater site plan has been prepared with the engineering plans for this project.

MINIMUM REQUIREMENT #2: CONSTRUCTION STORMWATER POLLUTION PREVENTION (SWPPP)

1: Mark Clearing Limits
One of the first steps in the "Construction Sequence" included on the clearing and grading plan sheets is for a surveyor to stake the limits of clearing and to have construction or silt fencing placed along the limits prior to any other construction activity.

2: Establish Construction Access
The SWPPP calls for the proposed construction entrance to be installed as the second step after the staking of clearing limits. For this project two access points are proposed. A detail is provided on the plans.

3: Control Flow Rates
This project will construct a detention vault as a first step. This will be used as a sediment pond during construction and the control structure will be in place to attenuate flows throughout construction.

4: Install Sediment Controls
This site and SWPPP proposes to construct two construction entrances to collect and contain the sediment on this site. In addition, inlet filters will be installed in the existing catch basins adjacent to the site and all new catch basins on-sit, and straw bale check dams will be installed in the ditch along the north side of Chain Lake Rd. Interceptor swales with check dams will be used on-site to capture runoff and direct it to the necessary sediment pond/vault. These features are intended to minimize the opportunity for sediment to leave the site via stormwater or on vehicles. The construction of these features is one of the first items required in the "Construction Sequence".

5: Stabilize Soils
The "Construction Sequence" and "TESC Notes" call for the stabilization of soils that remain unworked for certain lengths of time based on the time of year. Stabilization techniques may include but not limited to mulching, plastic sheeting or hydroseeding, notes have been added to the plan regarding protection for the stock pile area if necessary.

6: Protect Slopes
No permanent slopes are expected on this site; however, any temporary cut and stockpile areas will be protected as noted above.

7: Protect Drain Inlets
All existing & proposed catch basins and area drains will have inlet filters installed to protect the conveyance system.

8: Stabilize Channels and Outlets
Straw bale check dams will be used in the ditch along the north side of Chain Lake Rd. Also, interceptor swales with check dams will be used to convey on-site runoff to the vault. These features will protect the existing and proposed channels from erosion.

9: Control Pollutants
No outside chemicals are expected to be necessary for the construction of this project. All vehicles working on and around the site would need to meet the State requirements for emissions.

10: Control DeWatering
Dewatering runoff will be directed to the detention/water quality system. The contractor shall monitor the sediment vault to ensure no erosion or excessive sedimentation occurs in the disposal areas.

11: Maintain BMPs
The construction supervisor will be responsible for maintaining all BMPs during construction and working with the City to relocate or add BMPs as necessary as site conditions change.

12: Manage the Project
It will be the responsibility of the Contractor and Developer to manage this project and coordinate with the City Inspector and Engineer.

Inspection and Monitoring:
Site inspections shall be done by a person who is knowledgeable in the principles and practices of erosion and sediment control. The person must have skills to first assess the site conditions and construction activities that could impact the quality of stormwater, and second assess the effectiveness of erosion and sediment control measures used to control the quality of stormwater discharges.
Whenever inspection and/or monitoring reveals that the BMPs identified in the Construction SWPPP are inadequate, due to the actual discharge of or potential to discharge a significant amount of any pollutant, appropriate BMPs or design changes shall be implemented as soon as possible.

Maintaining an Updated Construction SWPPP:
The construction SWPPP shall be retained on-site or within reasonable access to the site.

The SWPPP shall be modified whenever there is a change in the design, construction, operation, or maintenance at the construction site that has, or could have, a significant effect on the discharge of pollutants to waters of the state.

The SWPPP shall be modified if, during inspections or investigations conducted by the owner/operator, or the applicable local or state regulatory authority, it is determined that the SWPPP is ineffective in eliminating or significantly minimizing pollutants in stormwater discharges from the site. The SWPPP shall be modified as necessary to include additional or modified BMPs designed to correct problems identified. Revisions to the SWPPP shall be completed within seven days following inspection.

MINIMUM REQUIREMENT #3: SOURCE CONTROL OF POLLUTANTS

The improvements proposed on this site will create 31-lots and new public roads. Residential sub-divisions do not require additional source control BMPS, but basic water quality is proposed on this site.

MINIMUM REQUIREMENT #4: PRESERVATION OF NATURAL DRAINAGE SYSTEMS AND OUTFALLS

The pond outfall will be connected to the downstream ditch system within the Chain Lake Rd right-of-way. This is the natural downstream location since all runoff from the existing site either drains directly to the ditch or across the neighboring property and into the ditch.

MINIMUM REQUIREMENT #5: ON-SITE STORMWATER MANAGEMENT

Runoff from the new public road and future lots will be collected CBs and conveyed to a detention/water quality system for this project. Roof runoff from each future SFR will be directed to an individual perforated stubout connection before discharging into the conveyance system within the future road right-of-way. The landscaping will be graded to drain toward the lot yard drains to the maximum extent feasible.

MINIMUM REQUIREMENT #6: RUNOFF TREATMENT

A Contech Storm Filter is proposed for this project. This design meets the basic water quality treatment requirement for residential projects.

MINIMUM REQUIREMENT #7: FLOW CONTROL

The design and analysis for this project requires the construction of a vault system which was sized using the WWHM2012 software.

MINIMUM REQUIREMENT #8: WETLAND PROTECTION

No on-site wetlands were identified on or adjacent to this project.

MINIMUM REQUIREMENT #9: BASIN/WATERSHED PLANNING

The scope of this project is too small to justify a Watershed Plan.

MINIMUM REQUIREMENT #10: OPERATION AND MAINTENANCE

A complete O&M manual will be provided with the full drainage report.

5. DESCRIPTION OF PROPOSED EROSION CONTROL BMP's

Clearing, grading, and temporary erosion and sediment control plans have be prepared for all phases of this project. However, since a construction site is dynamic it will be necessary to re-assess the erosion control BMP's during construction and install additional measures when and if necessary.

Proposed temporary measures for this project will include the following BMP's:
-Installation of stabilized rock construction entrance(s).
-Interceptor swales
-Rip-Rap check dams
-Straw mulch, hydroseed or other mulching and planting method to stabilized unworked areas.
-Silt Fencing
-Sediment Vault

Permanent measures to reduce or eliminate erosion or water quality degradation will include the following BMP's: (Under Future Phase/Permit)
-Paving all traffic areas
-Drainage collection system, including catch basins and floatable material separators
-Permanent landscaping in pervious areas.
-Limiting cut and fill slopes to 2:1 maximum
-Routine maintenance and inspection of the grounds and response to developing problems.

These proposed erosion control BMP's have been engineered for anticipated conditions in compliance with DOE guidelines. With proper installation, maintenance and inspection the proposed BMP's should result in minimal impact to the surrounding environment. The City retains the authority by code to require additional measures should the existing measures prove insufficient.

A. SITE GRADING/EROSION CONTROL RISK ASSESSMENT

SLOPE: Existing grades onsite slope down from north to south to northwest to southeast ranging from 2.0% to approximately 10.0%. The proposed internal road grades will be no greater than 7%.
CRITICAL AREAS: None on-site.
SOILS: In the development area of the site soils are hydrologic group C, (from Geotechnical Report).
GROUND MOVEMENT POTENTIAL: N/A
SOURCES OF WATER FOR EROSION: Rainfall will be the only significant source of onsite runoff.
MEASURES PROPOSED TO PREVENT/MINIMIZE EROSION:
TEMPORARY MEASURES: Mulch cover, rock construction entrance(s), diversion swales, silt fencing are all proposed to be used to prevent or minimize erosion and siltation during construction.
PERMANENT MEASURES: Future measures will include permanent vegetative cover in pervious areas, limiting permanent cut and fill slopes to 2:1 maximum unless protected with a rockery face, asphalt pavement to stabilize all vehicle traffic areas and a piped conveyance system to control the location of runoff release. Routine maintenance of the grounds and response to developing problems will be a function of the property owner.
CONCLUSION: Proposed erosion control BMP's in compliance with DOE guidelines have been engineered for anticipated conditions. Civil construction plans include a detailed ESC plan that provides details and notes for the proposed BMP's. With proper installation, maintenance and inspection, the proposed BMP's should result in minimal impact to the surrounding environment. Based on the above information the Erosion Risk for this site is Low to Moderate. Reports, studies and designs for this site include:

SEPA Checklist, by Others
Preliminary Engineering Construction Plans, by Omega Engineering, Inc.
Getechnical Report, by Earth Solutions NW

B. Minimum Elements

1: Mark Clearing Limits
One of the first steps in the "Construction Sequence" included on the clearing and grading plan sheets is for a surveyor to stake the limits of clearing and to have construction or silt fencing placed along the limits prior to any other construction activity.

2: Establish Construction Access
The SWPPP calls for the proposed construction entrance to be installed as the second step after the staking of clearing limits. For this project two access points are proposed. A detail is provided on the plans.

3: Control Flow Rates
This project will construct a detention vault as a first step. This will be used as a sediment pond during construction and the control structure will be in place to attenuate flows throughout construction.

4: Install Sediment Controls
This site and SWPPP proposes to construct two construction entrances to collect and contain the sediment on this site. In addition, inlet filters will be installed in the existing catch basins adjacent to the site and all new catch basins on-sit, and straw bale check dams will be installed in the ditch along the north side of Chain Lake Rd. Interceptor swales with check dams will be used on-site to capture runoff and direct it to the necessary sediment pond/vault. These features are intended to minimize the opportunity for sediment to leave the site via stormwater or on vehicles. The construction of these features is one of the first items required in the "Construction Sequence".

5: Stabilize Soils
The "Construction Sequence" and "TESC Notes" call for the stabilization of soils that remain unworked for certain lengths of time based on the time of year. Stabilization techniques may include but not limited to mulching, plastic sheeting or hydroseeding, notes have been added to the plan regarding protection for the stock pile area if necessary.

6: Protect Slopes
No permanent slopes are expected on this site; however, any temporary cut and stockpile areas will be protected as noted above.

7: Protect Drain Inlets
All existing & proposed catch basins and area drains will have inlet filters installed to protect the conveyance system.

8: Stabilize Channels and Outlets
Straw bale check dams will be used in the ditch along the north side of Chain Lake Rd. Also, interceptor swales with check dams will be used to convey on-site runoff to the vault. These features will protect the existing and proposed channels from erosion.

9: Control Pollutants

No outside chemicals are expected to be necessary for the construction of this project. All vehicles working on and around the site would need to meet the State requirements for emissions.

10: Control DeWatering
Dewatering runoff will be directed to the detention/water quality system. The contractor shall monitor the sediment vault to ensure no erosion or excessive sedimentation occurs in the disposal areas.

11: Maintain BMPs
The construction supervisor will be responsible for maintaining all BMPs during construction and working with the City to relocate or add BMPs as necessary as site conditions change.

12: Manage the Project
It will be the responsibility of the Contractor and Developer to manage this project and coordinate with the City Inspector and Engineer.

Inspection and Monitoring:
Site inspections shall be done by a person who is knowledgeable in the principles and practices of erosion and sediment control. The person must have skills to first assess the site conditions and construction activities that could impact the quality of stormwater, and second assess the effectiveness of erosion and sediment control measures used to control the quality of stormwater discharges.
Whenever inspection and/or monitoring reveals that the BMPs identified in the Construction SWPPP are inadequate, due to the actual discharge of or potential to discharge a significant amount of any pollutant, appropriate BMPs or design changes shall be implemented as soon as possible.

Maintaining an Updated Construction SWPPP:
The construction SWPPP shall be retained on-site or within reasonable access to the site.

The SWPPP shall be modified whenever there is a change in the design, construction, operation, or maintenance at the construction site that has, or could have, a significant effect on the discharge of pollutants to waters of the state.

The SWPPP shall be modified if, during inspections or investigations conducted by the owner/operator, or the applicable local or state regulatory authority, it is determined that the SWPPP is ineffective in eliminating or significantly minimizing pollutants in stormwater discharges from the site. The SWPPP shall be modified as necessary to include additional or modified BMPs designed to correct problems identified. Revisions to the SWPPP shall be completed within seven days following inspection.

6. OFFSITE DRAINAGE ANALYSIS - UPSTREAM

From field observation and review of the available topography, it appears that some small areas to the north of this project will drain onto the site but the majority of the offsite area to the north is collected in the Milqaukee Hill Estates drainage system. The upstream flows mainly consist of some backyard landscaped areas. These flows are negligible in the existing condition and will be collected on-site and passed through the site in the developed condition.

7. OFFSITE DRAINAGE ANALYSIS - DOWNSTREAM

The project is bordered to the south by Chain Lake Rd. Since the proposed plat either drains directly into the Chain Lake R/W or to the east through an adjacent parcel and then into the Chain Lake conveyance system. The roadside ditch system continues along the north and then east side of Chain Lake Rd (as the road turns south) and is then collected by a new piped conveyance system for a new sub-division. Due to the site construction for that project it was not immediately clear where the outfall from the road runoff left that site. However, based on aerial topography it appears the flows continue south through an adjacent parcel and eventually into a large wetland complex that flows south through The Farm at Woods Creek sub-division.

The flows continue south down a ravine/embankment through a residential lot and are collected by a culvert passing beneath 197th Ave SE. The flows then turn south within the R/W until they reach the east side of Chain Lake Estates where the flow turn west within an open channel and then pass through a portion of that site and through neighboring properties to the northwest before being collected again by a large diameter culvert within the Chain Lake Rd R/W. This is past the ½ mile downstream point for this project.

8. DETENTION STORAGE CALCULATIONS

Current City code requires this site be analyzed using the 2012 with 2014 updates DOE manual and the WWHM2012 stormwater software. Since this site proposes using a combined detention vault followed by a Contech storm filter the software will be used to size the system.

The vault has been sized to accommodate the developed conditions for this project and will release the flows to the southeast into the existing ditch system. At this time a pipe outfall to rock pad is proposed.

Refer to appendix 'A' for the full output from the WWHM2012 software.

9. WATER QUALITY DESIGN

Water quality for this project will be provided in the form of a Contech Storm Filter downstream of the detention vault. The WWHM2012 software was used to calculate the required treatment flow rate.

10. CONVEYANCE CALCULATIONS

The majority of the pipes designed for this project will receive less than 2.5 cfs peak flows from the 100-year storm event. These pipes are designed as 12" pipes (S=0.5%, min.) with a peak flowing full capacity of over 2.7 cfs and therefore ore then adequate capacity to handle the expected flows.

However, final pipe conveyance designs will be provided with the construction permit submittal to the City once the over layout for the project has been finalized.

11. OPERATIONS AND MAINTENANCE MANUAL

The Property Owners and HOA will be responsible for maintaining the stormwater and landscaping facilities within this development. Included in this manual are checklists for each feature specific to this project. Copies should be made of the checklists as necessary during routine inspections and required maintenance. Specific problems can be recorded along with the appropriate action taken.

These checklists are a guide for inspections and maintenance. The frequency of the inspections/maintenance is identified in the left hand column with the following abbreviations:

A = Annual (March or April preferred)
M = Monthly
S = After Major Storms (Use 1-inch in 24 hours as a guideline)

Routine inspections and maintenance will improve the long-term performance of the stormwater facilities. If at any time you are unsure if a problem exists or how to address a specific problem, contact a Professional Engineer.

Refer to Appendix B for a list of each facility to be maintained and the appropriate maintenance checklist. (To be provided with construction permit application)

APPENDIX A

STORMWATER CALCULATIONS

Manning Pipe Calculator

Given Input Data:

Shape ..... Circular

Solving for ..... Flowrate

Diameter ..... 18.0000 in

Depth ..... 16.9000 in

Slope ..... 0.0050 ft/ft

Manning's n 0.0120

Computed Results:

Flowrate ..... 8.6558 cfs

Area 1.7671 ft2

Wetted Area 1.7227 ft2

Wetted Perimeter ..... 47.5560 in

Perimeter ..... 56.5487 in

Velocity ..... 5.0247 fps

Hydraulic Radius ..... 5.2162 in

Percent Full ..... 93.8889 %

Full flow Flowrate ..... 8.0467 cfs

Full flow velocity ..... 4.5535 fps

Manning Pipe Calculator

Given Input Data:

Shape ..... Circular

Solving for ..... Flowrate

Diameter ..... 12.0000 in

Depth ..... 11.4000 in

Slope ..... 0.0050 ft/ft

Manning's n 0.0120

Computed Results:

Flowrate ..... 2.9326 cfs

Area 0.7854 ft2

Wetted Area 0.7707 ft2

Wetted Perimeter ..... 32.2868 in

Perimeter ..... 37.6991 in

Velocity ..... 3.8050 fps

Hydraulic Radius ..... 3.4374 in

Percent Full ..... 95.0000 %

Full flow Flowrate ..... 2.7292 cfs

Full flow velocity ..... 3.4750 fps

WWHM2012

PROJECT REPORT

General Model Information

Project Name:	vault
Site Name:	Kestrel Ridge
Site Address:	13217 Chain Lk Rd
City:	Monroe
Report Date:	7/31/2018
Gage:	Everett
Data Start:	1948/10/01
Data End:	2009/09/30
Timestep:	15 Minute
Precip Scale:	1.200
Version Date:	2017/04/17
Version:	4.2.13

POC Thresholds

Low Flow Threshold for POC1:	50 Percent of the 2 Year
High Flow Threshold for POC1:	50 Year

Landuse Basin Data

Predeveloped Land Use

Basin 1

Bypass:	No
GroundWater:	No
Pervious Land Use	acre
C, Forest, Mod	4.45
Pervious Total	4.45
Impervious Land Use	acre
Impervious Total	0
Basin Total	4.45

Element Flows To:

Surface	Interflow	Groundwater

Mitigated Land Use

Basin 1

Bypass:	No
GroundWater:	No
Pervious Land Use	acre
C, Lawn, Mod	0.96
Pervious Total	0.96
Impervious Land Use	acre
ROADS MOD	1.58
ROOF TOPS FLAT	1.91
Impervious Total	3.49
Basin Total	4.45

Element Flows To:

Surface	Interflow	Groundwater
Vault 1	Vault 1	

Routing Elements
Predeveloped Routing

Mitigated Routing

Vault 1

Width: 50.4439171006494 ft.
Length: 252.219585503245 ft.
Depth: 8 ft.
Discharge Structure
Riser Height: 7 ft.
Riser Diameter: 18 in.
Notch Type: Rectangular
Notch Width: 0.014 ft.
Notch Height: 3.947 ft.
Orifice 1 Diameter: 1.3484455942783 in. Elevation: 0 ft.
Element Flows To:
Outlet 1 Outlet 2

Vault Hydraulic Table

Stage(feet)	Area(ac.)	Volume(ac-ft.)	Discharge(cfs)	Infilt(cfs)
0.0000	0.292	0.000	0.000	0.000
0.0889	0.292	0.026	0.014	0.000
0.1778	0.292	0.051	0.020	0.000
0.2667	0.292	0.077	0.025	0.000
0.3556	0.292	0.103	0.029	0.000
0.4444	0.292	0.129	0.032	0.000
0.5333	0.292	0.155	0.036	0.000
0.6222	0.292	0.181	0.038	0.000
0.7111	0.292	0.207	0.041	0.000
0.8000	0.292	0.233	0.044	0.000
0.8889	0.292	0.259	0.046	0.000
0.9778	0.292	0.285	0.048	0.000
1.0667	0.292	0.311	0.051	0.000
1.1556	0.292	0.337	0.053	0.000
1.2444	0.292	0.363	0.055	0.000
1.3333	0.292	0.389	0.057	0.000
1.4222	0.292	0.415	0.058	0.000
1.5111	0.292	0.441	0.060	0.000
1.6000	0.292	0.467	0.062	0.000
1.6889	0.292	0.493	0.064	0.000
1.7778	0.292	0.519	0.065	0.000
1.8667	0.292	0.545	0.067	0.000
1.9556	0.292	0.571	0.069	0.000
2.0444	0.292	0.597	0.070	0.000
2.1333	0.292	0.623	0.072	0.000
2.2222	0.292	0.649	0.073	0.000
2.3111	0.292	0.675	0.075	0.000
2.4000	0.292	0.701	0.076	0.000
2.4889	0.292	0.727	0.077	0.000
2.5778	0.292	0.752	0.079	0.000
2.6667	0.292	0.778	0.080	0.000
2.7556	0.292	0.804	0.081	0.000
2.8444	0.292	0.830	0.083	0.000
2.9333	0.292	0.856	0.084	0.000
3.0222	0.292	0.882	0.085	0.000
3.1111	0.292	0.908	0.087	0.000
3.2000	0.292	0.934	0.090	0.000

3.2889	0.292	0.960	0.094	0.000
3.3778	0.292	0.986	0.099	0.000
3.4667	0.292	1.012	0.103	0.000
3.5556	0.292	1.038	0.108	0.000
3.6444	0.292	1.064	0.113	0.000
3.7333	0.292	1.090	0.118	0.000
3.8222	0.292	1.116	0.123	0.000
3.9111	0.292	1.142	0.129	0.000
4.0000	0.292	1.168	0.134	0.000
4.0889	0.292	1.194	0.140	0.000
4.1778	0.292	1.220	0.146	0.000
4.2667	0.292	1.246	0.153	0.000
4.3556	0.292	1.272	0.160	0.000
4.4444	0.292	1.298	0.167	0.000
4.5333	0.292	1.324	0.196	0.000
4.6222	0.292	1.350	0.205	0.000
4.7111	0.292	1.376	0.215	0.000
4.8000	0.292	1.402	0.225	0.000
4.8889	0.292	1.427	0.235	0.000
4.9778	0.292	1.453	0.245	0.000
5.0667	0.292	1.479	0.256	0.000
5.1556	0.292	1.505	0.266	0.000
5.2444	0.292	1.531	0.277	0.000
5.3333	0.292	1.557	0.288	0.000
5.4222	0.292	1.583	0.299	0.000
5.5111	0.292	1.609	0.311	0.000
5.6000	0.292	1.635	0.323	0.000
5.6889	0.292	1.661	0.334	0.000
5.7778	0.292	1.687	0.346	0.000
5.8667	0.292	1.713	0.358	0.000
5.9556	0.292	1.739	0.371	0.000
6.0444	0.292	1.765	0.383	0.000
6.1333	0.292	1.791	0.396	0.000
6.2222	0.292	1.817	0.409	0.000
6.3111	0.292	1.843	0.422	0.000
6.4000	0.292	1.869	0.435	0.000
6.4889	0.292	1.895	0.448	0.000
6.5778	0.292	1.921	0.462	0.000
6.6667	0.292	1.947	0.475	0.000
6.7556	0.292	1.973	0.489	0.000
6.8444	0.292	1.999	0.503	0.000
6.9333	0.292	2.025	0.517	0.000
7.0222	0.292	2.051	0.581	0.000
7.1111	0.292	2.077	1.117	0.000
7.2000	0.292	2.103	1.934	0.000
7.2889	0.292	2.128	2.905	0.000
7.3778	0.292	2.154	3.918	0.000
7.4667	0.292	2.180	4.858	0.000
7.5556	0.292	2.206	5.630	0.000
7.6444	0.292	2.232	6.183	0.000
7.7333	0.292	2.258	6.549	0.000
7.8222	0.292	2.284	6.961	0.000
7.9111	0.292	2.310	7.300	0.000
8.0000	0.292	2.336	7.624	0.000
8.0889	0.292	2.362	7.933	0.000
8.1778	0.000	0.000	8.229	0.000

Analysis Results
POC 1

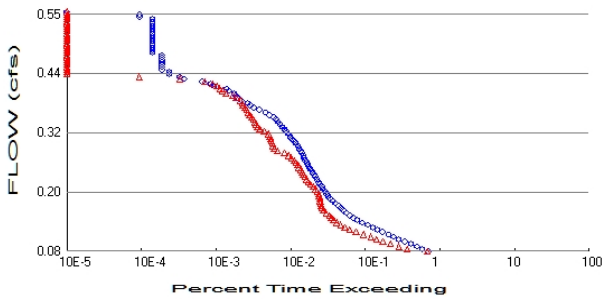

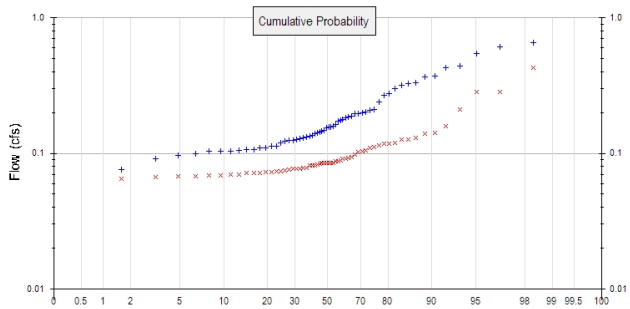

+ Predeveloped x Mitigated

Predeveloped Landuse Totals for POC #1
Total Pervious Area: 4.45
Total Impervious Area: 0

Mitigated Landuse Totals for POC #1
Total Pervious Area: 0.96
Total Impervious Area: 3.49

Flow Frequency Method: Log Pearson Type III 17B

Flow Frequency Return Periods for Predeveloped. POC #1

Return Period	**Flow(cfs)**
2 year	0.164499
5 year	0.263059
10 year	0.341486
25 year	0.456478
50 year	0.554293
100 year	0.663045

Flow Frequency Return Periods for Mitigated. POC #1

Return Period	**Flow(cfs)**
2 year	0.090182
5 year	0.127296
10 year	0.157102
25 year	0.201369
50 year	0.2396
100 year	0.282747

Annual Peaks

Annual Peaks for Predeveloped and Mitigated. POC #1

Year	**Predeveloped**	**Mitigated**
1949	0.183	0.078
1950	0.186	0.085
1951	0.157	0.072
1952	0.128	0.069
1953	0.104	0.070
1954	0.651	0.082
1955	0.197	0.117
1956	0.172	0.127
1957	0.239	0.103
1958	0.208	0.077

1959	0.162	0.083
1960	0.157	0.088
1961	0.326	0.112
1962	0.158	0.073
1963	0.266	0.076
1964	0.210	0.065
1965	0.130	0.086
1966	0.076	0.072
1967	0.154	0.074
1968	0.188	0.093
1969	0.609	0.077
1970	0.107	0.075
1971	0.203	0.141
1972	0.125	0.082
1973	0.123	0.085
1974	0.333	0.083
1975	0.127	0.070
1976	0.134	0.082
1977	0.096	0.077
1978	0.112	0.069
1979	0.373	0.078
1980	0.175	0.068
1981	0.110	0.071
1982	0.142	0.117
1983	0.302	0.073
1984	0.147	0.159
1985	0.196	0.114
1986	0.440	0.285
1987	0.199	0.212
1988	0.103	0.120
1989	0.132	0.068
1990	0.139	0.102
1991	0.143	0.085
1992	0.109	0.091
1993	0.105	0.067
1994	0.100	0.088
1995	0.146	0.126
1996	0.275	0.110
1997	0.546	0.430
1998	0.091	0.072
1999	0.119	0.092
2000	0.103	0.139
2001	0.036	0.058
2002	0.136	0.094
2003	0.106	0.085
2004	0.179	0.131
2005	0.124	0.085
2006	0.429	0.105
2007	0.317	0.098
2008	0.368	0.283
2009	0.112	0.088

Ranked Annual Peaks

Ranked Annual Peaks for Predeveloped and Mitigated. POC #1

Rank	**Predeveloped**	**Mitigated**
1	0.6508	0.4302
2	0.6089	0.2851
3	0.5458	0.2833

4	0.4402	0.2119
5	0.4294	0.1592
6	0.3727	0.1415
7	0.3682	0.1391
8	0.3328	0.1307
9	0.3263	0.1270
10	0.3172	0.1261
11	0.3022	0.1197
12	0.2751	0.1172
13	0.2663	0.1170
14	0.2388	0.1141
15	0.2099	0.1118
16	0.2077	0.1104
17	0.2025	0.1054
18	0.1991	0.1032
19	0.1971	0.1024
20	0.1960	0.0983
21	0.1882	0.0940
22	0.1859	0.0929
23	0.1830	0.0916
24	0.1788	0.0907
25	0.1745	0.0881
26	0.1723	0.0876
27	0.1622	0.0876
28	0.1579	0.0856
29	0.1573	0.0854
30	0.1572	0.0853
31	0.1543	0.0849
32	0.1468	0.0849
33	0.1459	0.0847
34	0.1435	0.0832
35	0.1424	0.0830
36	0.1393	0.0819
37	0.1357	0.0816
38	0.1337	0.0816
39	0.1325	0.0778
40	0.1298	0.0777
41	0.1279	0.0773
42	0.1272	0.0771
43	0.1250	0.0770
44	0.1245	0.0756
45	0.1232	0.0752
46	0.1190	0.0737
47	0.1124	0.0734
48	0.1121	0.0732
49	0.1098	0.0724
50	0.1094	0.0720
51	0.1074	0.0720
52	0.1063	0.0714
53	0.1047	0.0697
54	0.1038	0.0695
55	0.1035	0.0691
56	0.1031	0.0691
57	0.0996	0.0680
58	0.0964	0.0677
59	0.0911	0.0667
60	0.0762	0.0646
61	0.0359	0.0582

Duration Flows

The Facility PASSED

Flow(cfs)	Predev	Mit	Percentage	Pass/Fail
0.0822	14899	14478	97	Pass
0.0870	12356	7751	62	Pass
0.0918	10523	6000	57	Pass
0.0966	8720	4652	53	Pass
0.1013	7217	3675	50	Pass
0.1061	5967	3009	50	Pass
0.1109	5157	2539	49	Pass
0.1156	4359	2018	46	Pass
0.1204	3647	1595	43	Pass
0.1252	3086	1314	42	Pass
0.1299	2706	1130	41	Pass
0.1347	2306	1004	43	Pass
0.1395	1947	883	45	Pass
0.1442	1655	802	48	Pass
0.1490	1467	747	50	Pass
0.1538	1333	705	52	Pass
0.1585	1189	639	53	Pass
0.1633	1079	586	54	Pass
0.1681	1001	556	55	Pass
0.1728	938	549	58	Pass
0.1776	849	540	63	Pass
0.1824	783	532	67	Pass
0.1871	720	523	72	Pass
0.1919	680	516	75	Pass
0.1967	637	508	79	Pass
0.2015	614	486	79	Pass
0.2062	583	462	79	Pass
0.2110	555	429	77	Pass
0.2158	522	395	75	Pass
0.2205	500	366	73	Pass
0.2253	481	348	72	Pass
0.2301	456	330	72	Pass
0.2348	437	318	72	Pass
0.2396	419	305	72	Pass
0.2444	397	291	73	Pass
0.2491	382	275	71	Pass
0.2539	365	265	72	Pass
0.2587	350	251	71	Pass
0.2634	336	237	70	Pass
0.2682	323	219	67	Pass
0.2730	316	201	63	Pass
0.2777	300	176	58	Pass
0.2825	288	141	48	Pass
0.2873	277	127	45	Pass
0.2920	265	124	46	Pass
0.2968	247	122	49	Pass
0.3016	236	118	50	Pass
0.3064	222	115	51	Pass
0.3111	210	112	53	Pass
0.3159	198	109	55	Pass
0.3207	187	94	50	Pass
0.3254	175	82	46	Pass
0.3302	164	77	46	Pass

0.3350	154	73	47	Pass
0.3397	146	70	47	Pass
0.3445	136	68	50	Pass
0.3493	126	64	50	Pass
0.3540	111	60	54	Pass
0.3588	98	57	58	Pass
0.3636	81	55	67	Pass
0.3683	68	52	76	Pass
0.3731	61	49	80	Pass
0.3779	56	48	85	Pass
0.3826	46	45	97	Pass
0.3874	41	40	97	Pass
0.3922	39	36	92	Pass
0.3969	37	29	78	Pass
0.4017	32	26	81	Pass
0.4065	30	24	80	Pass
0.4112	20	22	110	Pass
0.4160	18	19	105	Pass
0.4208	14	15	107	Pass
0.4256	8	7	87	Pass
0.4303	7	2	28	Pass
0.4351	5	0	0	Pass
0.4399	5	0	0	Pass
0.4446	4	0	0	Pass
0.4494	4	0	0	Pass
0.4542	4	0	0	Pass
0.4589	4	0	0	Pass
0.4637	4	0	0	Pass
0.4685	4	0	0	Pass
0.4732	4	0	0	Pass
0.4780	3	0	0	Pass
0.4828	3	0	0	Pass
0.4875	3	0	0	Pass
0.4923	3	0	0	Pass
0.4971	3	0	0	Pass
0.5018	3	0	0	Pass
0.5066	3	0	0	Pass
0.5114	3	0	0	Pass
0.5161	3	0	0	Pass
0.5209	3	0	0	Pass
0.5257	3	0	0	Pass
0.5305	3	0	0	Pass
0.5352	3	0	0	Pass
0.5400	3	0	0	Pass
0.5448	3	0	0	Pass
0.5495	2	0	0	Pass
0.5543	2	0	0	Pass

Water Quality

Water Quality BMP Flow and Volume for POC #1

On-line facility volume:	0 acre-feet
On-line facility target flow:	0 cfs.
Adjusted for 15 min:	0 cfs.
Off-line facility target flow:	0 cfs.
Adjusted for 15 min:	0 cfs.

LID Report

LID Technique	Used for Treatment ?	Total Volume Needs Treatment (ac-ft)	Volume Through Facility (ac-ft)	Infiltration Volume (ac-ft)	Cumulative Volume Infiltration Credit	Percent Volume Infiltrated	Water Quality	Percent Water Quality Treated	Comment
Vault 1 POC	☐	713.95			☐	0.00			
Total Volume Infiltrated		713.95	0.00	0.00		0.00	0.00	0%	No Treat. Credit
Compliance with LID Standard 8% of 2-yr to 50% of 2-yr									Duration Analysis Result = Passed

Model Default Modifications

Total of 0 changes have been made.

PERLND Changes

No PERLND changes have been made.

IMPLND Changes

No IMPLND changes have been made.

Appendix

Predeveloped Schematic

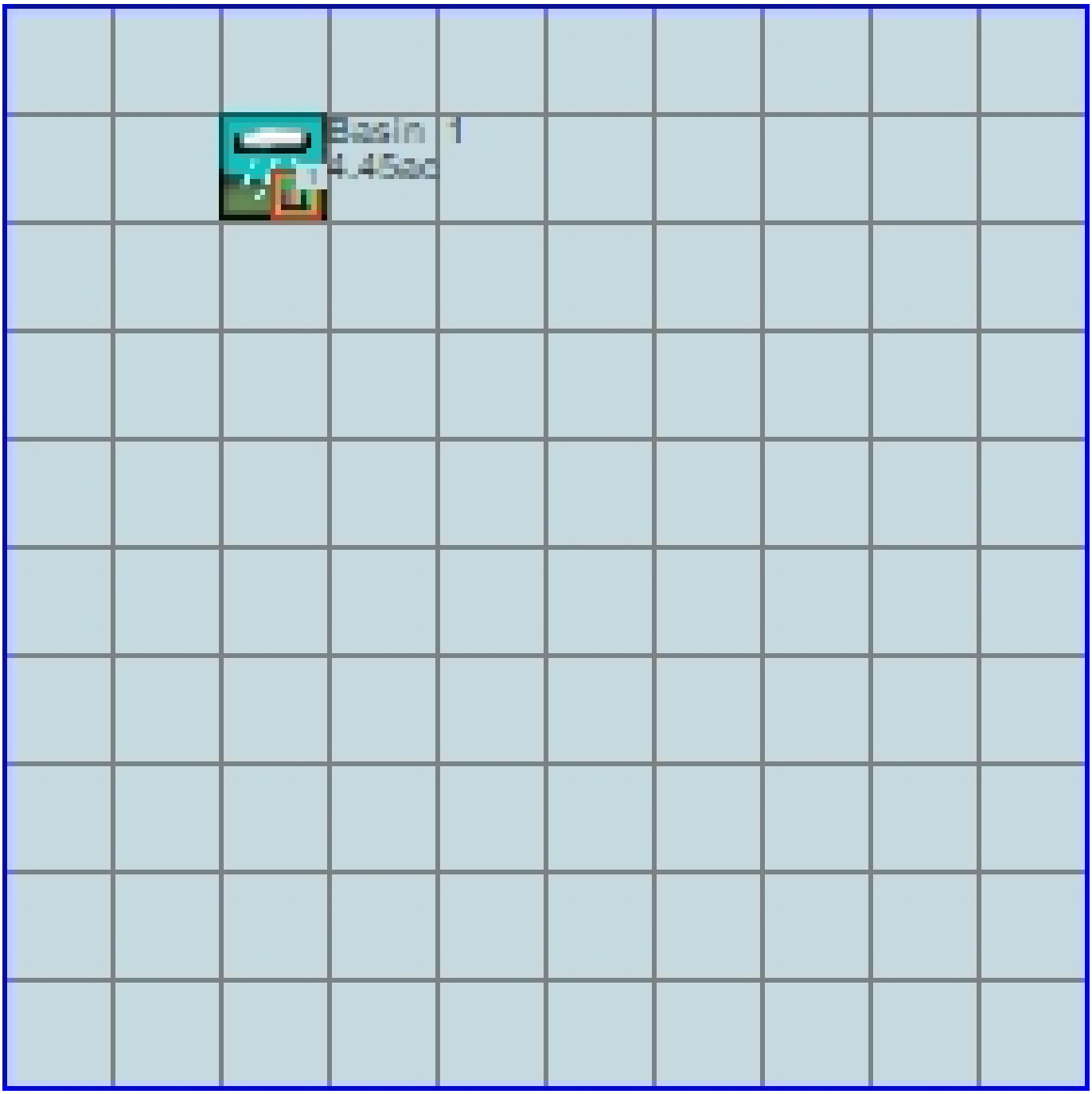

Mitigated Schematic

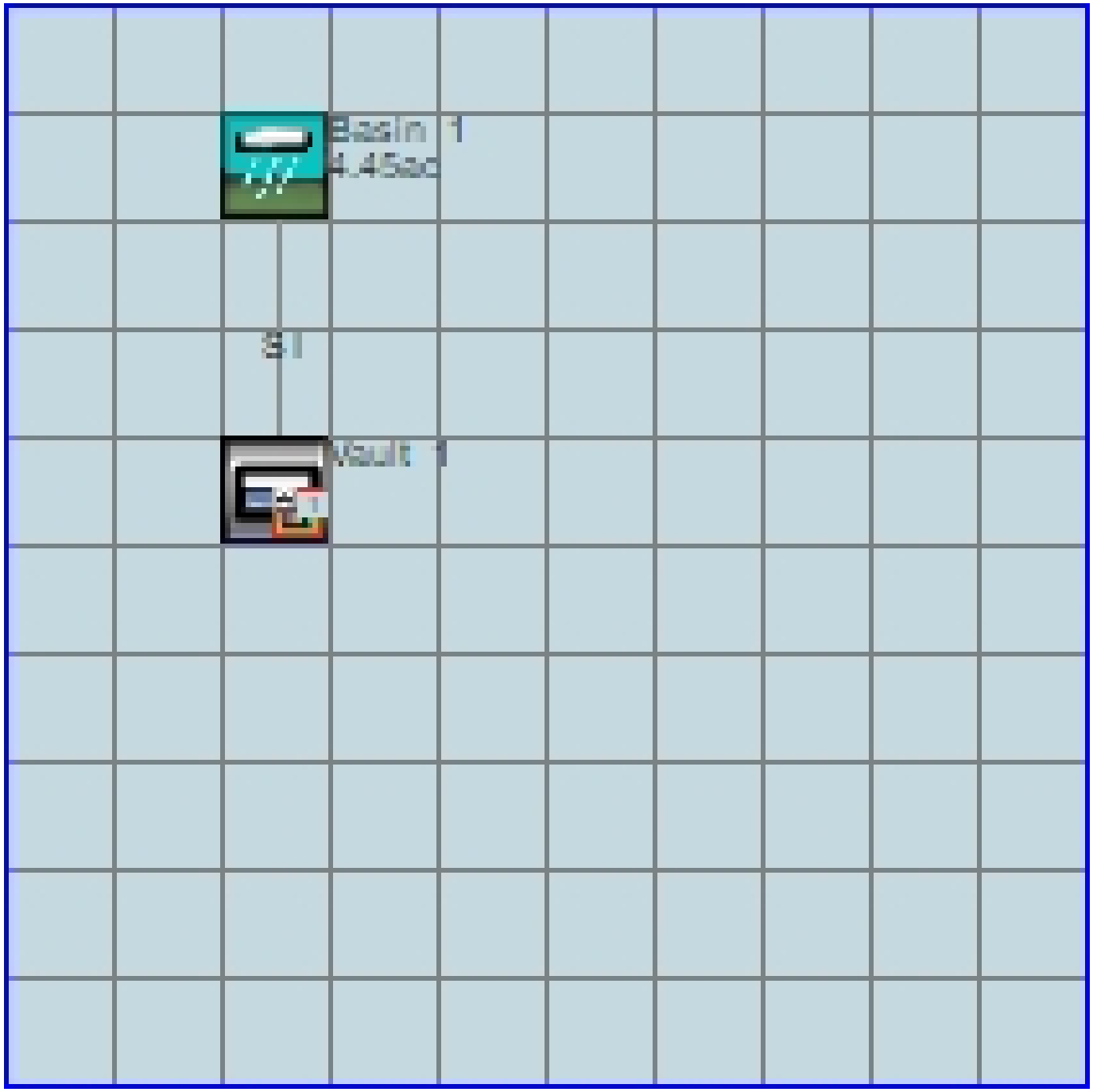

Disclaimer

Legal Notice

This program and accompanying documentation are provided 'as-is' without warranty of any kind. The entire risk regarding the performance and results of this program is assumed by End User. Clear Creek Solutions Inc. and the governmental licensee or sublicensees disclaim all warranties, either expressed or implied, including but not limited to implied warranties of program and accompanying documentation. In no event shall Clear Creek Solutions Inc. be liable for any damages whatsoever (including without limitation to damages for loss of business profits, loss of business information, business interruption, and the like) arising out of the use of, or inability to use this program even if Clear Creek Solutions Inc. or their authorized representatives have been advised of the possibility of such damages. Software Copyright © by : Clear Creek Solutions, Inc. 2005-2018; All Rights Reserved.

Clear Creek Solutions, Inc.
6200 Capitol Blvd. Ste F
Olympia, WA. 98501
Toll Free 1(866)943-0304
Local (360)943-0304

www.clearcreeksolutions.com

APPENDIX B

MAINTENANCE & OPERATIONS MANUAL

(To be Provided with Future Submittal)

APPENDIX C

GEOTECHNICAL REPORT

Earth Solutions NW LLC

Geotechnical Engineering
Geology
Environmental Scientists
Construction Monitoring

GEOTECHNICAL ENGINEERING STUDY
PROPOSED CHAIN LAKE PRD
13217 AND 13305 CHAIN LAKE ROAD
MONROE, WASHINGTON

ES-5859

1805 - 136th Place N.E., Suite 201 Bellevue, WA 98005
(425) 449-4704 Fax (425) 449-4711
www.earthsolutionsnw.com

PREPARED FOR

PROSPECT DEVELOPMENT, LLC

March 8, 2018

Samuel Suruda, G.I.T.
Staff Geologist

Scott S. Riegel, L.G., L.E.G.
Senior Project Manager

KYLE R. CAMPBELL
STATE OF WASHINGTON
27674
REGISTERED
PROFESSIONAL ENGINEER
3/9/18

Kyle R. Campbell, P.E.
Principal Engineer

GEOTECHNICAL ENGINEERING STUDY
PROPOSED CHAIN LAKE PRD
13217 AND 13305 CHAIN LAKE ROAD
MONROE, WASHINGTON

ES-5859

Earth Solutions NW, LLC
1805 – 136th Place Northeast, Suite 201
Bellevue, Washington 98005
Phone: 425-449-4704 | Fax: 425-449-4711
www.earthsolutionsnw.com

Important Information About Your

Geotechnical Engineering Report

Subsurface problems are a principal cause of construction delays, cost overruns, claims, and disputes.

The following information is provided to help you manage your risks.

Geotechnical Services Are Performed for Specific Purposes, Persons, and Projects

Geotechnical engineers structure their services to meet the specific needs of their clients. A geotechnical engineering study conducted for a civil engineer may not fulfill the needs of a construction contractor or even another civil engineer. Because each geotechnical engineering study is unique, each geotechnical engineering report is unique, prepared *solely* for the client. No one except you should rely on your geotechnical engineering report without first conferring with the geotechnical engineer who prepared it. *And no one — not even you* — should apply the report for any purpose or project except the one originally contemplated.

Read the Full Report

Serious problems have occurred because those relying on a geotechnical engineering report did not read it all. Do not rely on an executive summary. Do not read selected elements only.

A Geotechnical Engineering Report Is Based on A Unique Set of Project-Specific Factors

Geotechnical engineers consider a number of unique, project-specific factors when establishing the scope of a study. Typical factors include: the client's goals, objectives, and risk management preferences; the general nature of the structure involved, its size, and configuration; the location of the structure on the site; and other planned or existing site improvements, such as access roads, parking lots, and underground utilities. Unless the geotechnical engineer who conducted the study specifically indicates otherwise, do not rely on a geotechnical engineering report that was:

- not prepared for you,
- not prepared for your project,
- not prepared for the specific site explored, or
- completed before important project changes were made.

Typical changes that can erode the reliability of an existing geotechnical engineering report include those that affect:

- the function of the proposed structure, as when it's changed from a parking garage to an office building, or from a light industrial plant to a refrigerated warehouse,
- elevation, configuration, location, orientation, or weight of the proposed structure,
- composition of the design team, or
- project ownership.

As a general rule, *always* inform your geotechnical engineer of project changes—even minor ones—and request an assessment of their impact. *Geotechnical engineers cannot accept responsibility or liability for problems that occur because their reports do not consider developments of which they were not informed.*

Subsurface Conditions Can Change

A geotechnical engineering report is based on conditions that existed at the time the study was performed. *Do not rely on a geotechnical engineering report* whose adequacy may have been affected by: the passage of time; by man-made events, such as construction on or adjacent to the site; or by natural events, such as floods, earthquakes, or groundwater fluctuations. *Always* contact the geotechnical engineer before applying the report to determine if it is still reliable. A minor amount of additional testing or analysis could prevent major problems.

Most Geotechnical Findings Are Professional Opinions

Site exploration identifies subsurface conditions only at those points where subsurface tests are conducted or samples are taken. Geotechnical engineers review field and laboratory data and then apply their professional judgment to render an opinion about subsurface conditions throughout the site. Actual subsurface conditions may differ—sometimes significantly—from those indicated in your report. Retaining the geotechnical engineer who developed your report to provide construction observation is the most effective method of managing the risks associated with unanticipated conditions.

A Report's Recommendations Are *Not* Final

Do not overrely on the construction recommendations included in your report. *Those recommendations are not final,* because geotechnical engineers develop them principally from judgment and opinion. Geotechnical engineers can finalize their recommendations only by observing actual

subsurface conditions revealed during construction. *The geotechnical engineer who developed your report cannot assume responsibility or liability for the report's recommendations if that engineer does not perform construction observation.*

A Geotechnical Engineering Report Is Subject to Misinterpretation

Other design team members' misinterpretation of geotechnical engineering reports has resulted in costly problems. Lower that risk by having your geotechnical engineer confer with appropriate members of the design team after submitting the report. Also retain your geotechnical engineer to review pertinent elements of the design team's plans and specifications. Contractors can also misinterpret a geotechnical engineering report. Reduce that risk by having your geotechnical engineer participate in prebid and preconstruction conferences, and by providing construction observation.

Do Not Redraw the Engineer's Logs

Geotechnical engineers prepare final boring and testing logs based upon their interpretation of field logs and laboratory data. To prevent errors or omissions, the logs included in a geotechnical engineering report should *never* be redrawn for inclusion in architectural or other design drawings. Only photographic or electronic reproduction is acceptable, *but recognize that separating logs from the report can elevate risk.*

Give Contractors a Complete Report and Guidance

Some owners and design professionals mistakenly believe they can make contractors liable for unanticipated subsurface conditions by limiting what they provide for bid preparation. To help prevent costly problems, give contractors the complete geotechnical engineering report, *but* preface it with a clearly written letter of transmittal. In that letter, advise contractors that the report was not prepared for purposes of bid development and that the report's accuracy is limited; encourage them to confer with the geotechnical engineer who prepared the report (a modest fee may be required) and/or to conduct additional study to obtain the specific types of information they need or prefer. A prebid conference can also be valuable. *Be sure contractors have sufficient time* to perform additional study. Only then might you be in a position to give contractors the best information available to you, while requiring them to at least share some of the financial responsibilities stemming from unanticipated conditions.

Read Responsibility Provisions Closely

Some clients, design professionals, and contractors do not recognize that geotechnical engineering is far less exact than other engineering disciplines. This lack of understanding has created unrealistic expectations that have led to disappointments, claims, and disputes. To help reduce the risk of such outcomes, geotechnical engineers commonly include a variety of explanatory provisions in their reports. Sometimes labeled "limitations" many of these provisions indicate where geotechnical engineers' responsibilities begin and end, to help others recognize their own responsibilities and risks. *Read these provisions closely.* Ask questions. Your geotechnical engineer should respond fully and frankly.

Geoenvironmental Concerns Are Not Covered

The equipment, techniques, and personnel used to perform a *geoenvironmental* study differ significantly from those used to perform a *geotechnical* study. For that reason, a geotechnical engineering report does not usually relate any geoenvironmental findings, conclusions, or recommendations; e.g., about the likelihood of encountering underground storage tanks or regulated contaminants. *Unanticipated environmental problems have led to numerous project failures.* If you have not yet obtained your own geoenvironmental information, ask your geotechnical consultant for risk management guidance. *Do not rely on an environmental report prepared for someone else.*

Obtain Professional Assistance To Deal with Mold

Diverse strategies can be applied during building design, construction, operation, and maintenance to prevent significant amounts of mold from growing on indoor surfaces. To be effective, all such strategies should be devised for the *express purpose* of mold prevention, integrated into a comprehensive plan, and executed with diligent oversight by a professional mold prevention consultant. Because just a small amount of water or moisture can lead to the development of severe mold infestations, a number of mold prevention strategies focus on keeping building surfaces dry. While groundwater, water infiltration, and similar issues may have been addressed as part of the geotechnical engineering study whose findings are conveyed in this report, the geotechnical engineer in charge of this project is not a mold prevention consultant; ***none of the services performed in connection with the geotechnical engineer's study were designed or conducted for the purpose of mold prevention. Proper implementation of the recommendations conveyed in this report will not of itself be sufficient to prevent mold from growing in or on the structure involved.***

Rely, on Your ASFE-Member Geotechncial Engineer for Additional Assistance

Membership in ASFE/The Best People on Earth exposes geotechnical engineers to a wide array of risk management techniques that can be of genuine benefit for everyone involved with a construction project. Confer with you ASFE-member geotechnical engineer for more information.

ASFE
The Best People on Earth

8811 Colesville Road/Suite G106, Silver Spring, MD 20910
Telephone: 301/565-2733 Facsimile: 301/589-2017
e-mail: info@asfe.org www.asfe.org

Copyright 2004 by ASFE, Inc. Duplication, reproduction, or copying of this document, in whole or in part, by any means whatsoever, is strictly prohibited, except with ASFE's specific written permission. Excerpting, quoting, or otherwise extracting wording from this document is permitted only with the express written permission of ASFE, and only for purposes of scholarly research or book review. Only members of ASFE may use this document as a complement to or as an element of a geotechnical engineering report. Any other firm, individual, or other entity that so uses this document without being an ASFE member could be committing negligent or intentional (fraudulent) misrepresentation.

IIGER06045.0M

Earth Solutions NW LLC

• Geotechnical Engineering
• Construction Monitoring
• Environmental Sciences

March 8, 2018
ES-5859

Prospect Development, LLC
2913 – 5th Avenue Northeast, Suite 201
Puyallup, Washington 98372

Attention: Mr. Mark Holland

Dear Mr. Holland:

Earth Solutions NW, LLC (ESNW) is pleased to present this report titled "Geotechnical Engineering Study, Chain Lakes PRD, 13217 and 13305 Chain Lake Road, Monroe, Washington". Based on the results of our investigation, the proposed project is feasible from a geotechnical standpoint. Our study indicates the site is underlain predominately by glacial till deposits. During our subsurface exploration completed on February 2, 2018, groundwater seepage was encountered at shallow depths across much of the site. Mitigation of this groundwater prior to site excavation will be critical during the grading process, and is discussed in greater detail later in this report.

The proposed structures may be constructed on conventional continuous and spread footing foundations bearing on competent native soil, recompacted native soil, or new structural fill placed directly on competent native soil. In general, competent native soil, suitable for support of the new foundations, will likely be encountered beginning at depths of one to three feet below existing grades. Where loose or unsuitable soil conditions are exposed at foundation subgrade elevations, compaction of soils to the specifications of structural fill, or overexcavation and replacement with a suitable structural fill material, will be necessary.

In accordance with the Department of Ecology's Stormwater Management Manual adopted by the City of Monroe, infiltration is not feasible from a geotechnical standpoint. Weakly cemented glacial till deposits were observed roughly two feet below ground surface, as well as heavy groundwater flow at shallow depths. Conceptual plans show a storm detention area in the eastern portion of the site.

We appreciate the opportunity to be of service to you on this project. If you have questions regarding the content of this geotechnical engineering study, please call.

Sincerely,

EARTH SOLUTIONS NW, LLC

Samuel E. Suruda, G.I.T.
Staff Geologist

1805 - 136th Place N.E., Suite 201 • Bellevue, WA 98005 • (425) 449-4704 • FAX (425) 449-4711

Table of Contents

ES-5859

	PAGE
INTRODUCTION	1
General	1
Project Description	1
SITE CONDITIONS	2
Surface	2
Subsurface	2
Topsoil and Fill	2
Native Soil	2
Geologic Setting	3
Groundwater	3
Geologically Hazardous Areas	3
DISCUSSION AND RECOMMENDATIONS	3
General	3
Site Preparation and Earthwork	4
Temporary Erosion Control	4
Construction Dewatering	5
Stripping	5
Excavations and Slopes	5
In-situ and Imported Soils	6
Subgrade Preparation	6
Structural Fill	7
Foundations	7
Seismic Design	7
Slab-on-Grade Floors	8
Retaining Walls	8
Drainage	9
Infiltration Evaluation	9
Preliminary Detention Vault Recommendations	9
Utility Support and Trench Backfill	10
Preliminary Pavement Sections	10
LIMITATIONS	11
Additional Services	11

Table of Contents

Cont'd

ES-5859

GRAPHICS

Plate 1	Vicinity Map
Plate 2	Test Pit Location Plan
Plate 3	Typical Finger Drain Detail
Plate 4	Retaining Wall Drainage Detail
Plate 5	Footing Drain Detail

APPENDICES

Appendix A	Subsurface Exploration Test Pit Logs
Appendix B	Laboratory Test Results

GEOTECHNICAL ENGINEERING STUDY
PROPOSED CHAIN LAKE PRD
13217 AND 13305 CHAIN LAKE ROAD
MONROE, WASHINGTON

ES-5859

INTRODUCTION

General

This geotechnical engineering study (study) was prepared for the proposed residential development to be constructed at 13217 and 13305 Chain Lake Road, in Monroe, Washington. The purpose of this study was to provide geotechnical recommendations for currently proposed development plans. Our scope of services for completing this study included the following:

- Excavation, logging, and sampling of test pits for purposes of characterizing site soils;
- Laboratory testing of soil samples collected at the test pit locations;
- Engineering analyses, and;
- Preparation of this report.

The following documents and maps were reviewed as part of our study preparation:

- Chain Lake Road PRD conceptual layout 1, by RM Homes;
- Surficial geologic map of the Skykomish and Snoqualmie Rivers area, Snohomish and King Counties, Washington, prepared by Booth, 1990;
- Online Web Soil Survey (WSS) resource, provided by the United States Department of Agriculture (USDA), Natural Resources Conservation Service.

Project Description

Preliminary site layout indicates the subject site will be developed with 23 single-family residences, a tract road, a stormwater detention area, and associated infrastructure improvements. At the time of this report submission, specific building load and grading plans were not available for review; however, we anticipate the proposed structures will be two to three stories in height and constructed utilizing relatively lightly loaded wood framing supported on a conventional foundation system. Perimeter footing loads will likely be 1 to 2 kips per lineal foot, and slab-on-grade loading is anticipated to be approximately 150 pounds per square foot (psf).

Stormwater will be managed primarily by a detention facility located in the eastern portion of the site. Given the moderate topography and elevation on the site, cuts and fills ranging up to about ten feet are expected.

If the above design assumptions are incorrect or change, ESNW should be contacted to review the recommendations provided in this report. ESNW should review final designs to confirm that our geotechnical recommendations been incorporated into the plans.

SITE CONDITIONS

Surface

The subject site is located north of Chain Lake Road approximately 300 feet east of the intersection with Brown Road, in Monroe, Washington. The approximate location of the property is illustrated on Plate 1 (Vicinity Map). The property is comprised of two separate tax parcels (Snohomish County Parcel Nos. 2807310020-2500 and -0600) totaling about 5.92 acres. The site is bordered to the north, east, and west by residential houses, and to the south by Chain Lake Road. The site is currently occupied by one single family home and an unoccupied structure. The site topography descends gradually to the east.

Subsurface

A representative of ESNW observed, logged, and sampled five test pits, excavated at accessible locations within the site boundaries, on February 2, 2018 using a mini-trackhoe and operator provided by the client. The explorations were completed for purposes of assessment and classification of site soils as well as characterization of groundwater conditions within areas proposed for new development. The approximate locations of the explorations are depicted on Plate 2 (Test Pit Location Plan). Please refer to the test pit logs provided in Appendix A for a more detailed description of subsurface conditions. Representative soil samples collected at the test pit locations were evaluated in general accordance with Unified Soil Classification System (USCS) and United States Department of Agriculture (USDA) methods and procedures.

Topsoil and Fill

Topsoil was observed extending to depths of about 3 to 12 inches. The topsoil was characterized by the observed dark brown hue, the presence of fine organics, and small root intrusions.

Fill was not encountered at any of the test pit locations. Fill encountered during grading should be evaluated by ESNW during grading activities.

Native Soil

Underlying topsoil, native soils consisted primarily of medium dense to dense silty sand with gravel (USCS: SM). Native soils were primarily encountered in a moist to wet condition. The maximum exploration depth was approximately seven feet below the existing ground surface (bgs).

Geologic Setting

The referenced geologic map resource identifies glacial till (Qvt) deposits as the primary native soil unit underlying the subject site. The till was deposited directly from the glacier as it advanced over bedrock and older Quaternary sediment and is often characterized as a silty sand with gravel. The referenced WSS resource identifies Tokul Medially Gravelly Loam (Map Unit Symbols: 72 and 73) as the primary soil units underlying the subject site. The Tokul was formed in glacial drift settings. Based on our field observations, on-site native soils are generally consistent with glacial till (Qvt) deposits.

Groundwater

During our subsurface exploration completed on February 2, 2018 heavy groundwater seepage was encountered at most locations. Moderate to heavy seepage was encountered from about one to three feet bgs across the site and likely represents interflow where groundwater travels within the shallow weathered zone. Water was observed to be entering excavations from a general northwestern direction, and is likely entering the site from the north side of the 13217 property. It is our opinion the contractor should anticipate and be prepared to respond to perched groundwater seepage during construction, especially within site excavations located within the northern half of the site. Groundwater seepage is common within relatively permeable soil lenses located above more dense to very dense deposits. Temporary measures to control surface water runoff and groundwater during construction would likely involve interceptor trenches, sumps, and dewatering pumps. It should be noted that seepage rates and elevations fluctuate depending on many factors, including precipitation duration and intensity, the time of year, and soil conditions. In general, groundwater flow rates are higher during the wet season (October through April).

Geologically Hazardous Areas

Based on review of geologically hazardous areas in the Monroe Municipal Code 20.05.120, the subject site does not appear to be within, or immediately adjacent to, geologically hazardous areas, with the exception of potentially erodible geology. In our opinion, site susceptibility to erosion hazards may be considered low, provided that groundwater seepage is mitigated appropriately during construction, and temporary erosion control measures are included during grading activities.

DISCUSSION AND RECOMMENDATIONS

General

Based on the results of our investigation, construction of the proposed residential development is feasible from a geotechnical standpoint. The primary geotechnical considerations associated with the proposed development include foundation support, slab-on-grade subgrade support, groundwater drainage, and the suitability of using native soils as structural fill.

The proposed structures may be constructed on conventional continuous and spread footing foundations bearing on competent native soil, recompacted native soil, or new structural fill placed directly on competent native soil. In general, competent native soil, suitable for support of the new foundations, will likely be encountered beginning at depths of one to three feet below existing grades. Where loose or unsuitable soil conditions are exposed at foundation subgrade elevations, compaction of soils to the specifications of structural fill, or overexcavation and replacement with a suitable structural fill material, will be necessary.

Due to the heavy seepage present across most of the subject site, groundwater mitigation should be addressed prior to grading and sitework taking place. In our opinion, an interceptor trench along the upslope margins of the development envelope should be installed prior to the commencement of mass grading.

Glacial till was observed to be in a dense condition and weakly cemented roughly two feet below ground surface. Heavy groundwater flow was observed throughout the site of shallow depths. Given the shallow depths to groundwater and dense, native soils, infiltration is not recommended for this site.

This study has been prepared for the exclusive use of Prospect Development, LLC and their representatives. A warranty is neither expressed nor implied. This study has been prepared in a manner consistent with the level of care and skill ordinarily exercised by other members of the profession currently practicing under similar conditions in this area.

Site Preparation and Earthwork

Initial site preparation activities will consist of installing temporary erosion control measures, establishing grading limits, performing site clearing and site stripping and installation of interceptor drains. Subsequent earthwork procedures will involve grading and related infrastructure improvements.

Temporary Erosion Control

Temporary construction entrances and drive lanes, consisting of at least six inches of quarry spalls, should be considered to both minimize off-site soil tracking and provide a stable access surface for construction vehicles. Geotextile fabric may be placed below the quarry spalls for greater stability of the temporary construction entrance. Erosion control measures should consist of silt fencing placed around appropriate portions of the site perimeter. Soil stockpiles should be covered or otherwise protected to reduce the potential for soil erosion during periods of wet weather. Temporary approaches for controlling surface water runoff should be established prior to beginning earthwork activities. Additional Best Management Practices (BMPs), as specified by the project civil engineer and indicated on the plans, should be incorporated into construction activities.

Construction Dewatering

Diversion of shallow groundwater should be implemented prior to mass grading and excavations on this site. An interception trench installed along the northern and western site boundaries will help control groundwater and should reduce the effects of on-site seepage. Completion of this trench as early as possible into the project will be key to reducing seepage onsite. The interceptor trench should be installed at a minimum depth of four feet below ground surface within dense, native till. A temporary detention pond, Baker tank, or another means of adequate water treatment and storage will be necessary due to the estimated high volume of groundwater. An ESNW representative should be onsite during trench construction and drainage program to confirm that groundwater is being managed adequately and to provide additional recommendations. A typical interceptor trench detail is provided on Plate 3. We recommend that prior to construction of the trench, ESNW should meet on-site with the client and contractor to finalize trench direction and locations. Additional drainage measures may be necessary on the site depending on the groundwater conditions at the time of construction.

Stripping

Topsoil was encountered within the upper approximately 3 to 12 inches of existing grades at the test pit locations. ESNW should be retained to provide site stripping recommendations at the time of construction. Topsoil and/or organic-rich soil is considered suitable for use neither in structural areas nor as structural fill. If desired, topsoil and/or organic-rich soil may be used in non-structural areas. Based on our field observations, for cost-estimating purposes, an average topsoil and organic-rich soil thickness of six inches should be expected across the site.

Excavations and Slopes

Reduction of groundwater flow will be critical to ensure that overall stability of site excavations remain in good condition while open. Based on the soil conditions observed at the test pit locations, the following allowable temporary slope inclinations, as a function of horizontal to vertical (H:V) inclination, may be used. The applicable Federal Occupation Safety and Health Administration (OSHA) and Washington Industrial Safety and Health Act (WISHA) soil classifications are also provided:

- Loose and medium dense soil or fill — 1.5H:1V (Type C)
- Areas exposing groundwater seepage — 1.5H:1V (Type C)
- Medium dense to dense native soil — 1H:1V (Type B)

Permanent slopes should be planted with vegetation to enhance stability and to minimize erosion and should maintain a gradient of 2H:1V or flatter. The presence of perched groundwater may cause localized sloughing of temporary slopes due to excess seepage forces. An ESNW representative should observe temporary and permanent slopes to confirm the slope inclinations are suitable for the exposed soil conditions and to provide additional excavation and slope recommendations, as necessary. If the recommended temporary slope inclinations cannot be achieved, temporary shoring may be necessary to support excavations. This is particularly important where detention vault excavations may be made near property lines.

In-situ and Imported Soils

In-situ soils may not be suitable for use in structural fill applications unless the moisture content of the soil is at (or slightly above) the optimum moisture content at the time of placement and compaction. Successful use of native soils as structural fill will largely be dictated by in-situ moisture contents during construction. A contingency should be added to the budget in the event export of native soil and import of compactible fill is necessary.

Imported soil intended for use as structural fill should consist of a well-graded, granular soil with a moisture content that is at (or slightly above) the optimum level. Imported soil intended for use as structural fill should consist of a well-graded, granular soil with a fines content of 5 percent or less (where the fines content is defined as the percent passing the Number 200 sieve, based on the minus three-quarter-inch fraction).

Subgrade Preparation

Following site stripping, cuts and fills will be completed to establish proposed subgrade elevations across the site. ESNW should observe the subgrade areas during initial site preparation activities to confirm soil conditions are as anticipated and to provide supplementary recommendations for subgrade preparation. Complete restoration of voids resulting from previous grading activities must be executed as part of overall subgrade and building pad preparation activities. The following guidelines for preparing building subgrade areas should be incorporated into the final design:

- Where voids and grading disturbances extend below planned subgrade elevations, restoration of these areas should be completed. Structural fill should be used to restore voids or unstable areas resulting from previous grading.

- Recompact, or over-excavate and replace, areas of existing fill exposed at building subgrade elevations. Over-excavations should extend into competent native soils and structural fill should be utilized to restore subgrade elevations as necessary.

- ESNW should confirm subgrade conditions, as well as the required level of recompaction and/or over-excavation and replacement, during site preparation activities. ESNW should also evaluate the overall suitability of prepared subgrade areas following site preparation activities.

Structural Fill

Structural fill is defined as compacted soil placed in foundation, slab-on-grade, and roadway areas. Fill placed to construct permanent slopes and throughout retaining wall and utility trench backfill areas is considered structural fill as well. Soils placed in structural areas, including slab-on-grade, utility trench, and pavement areas, should be placed in loose lifts of 12 inches or less and compacted to a relative compaction of 95 percent, based on the laboratory maximum dry density as determined by the Modified Proctor Method (ASTM D1557).

Foundations

The proposed structures may be supported on conventional continuous and spread footing foundations bearing on competent native soil, recompacted native soil, or new structural fill placed directly on competent native soil. In general, competent native soil, suitable for support of the new foundations, will likely be encountered at depths of about two to three feet below existing grades. Where loose or unsuitable soil conditions are exposed at foundation subgrade elevations, compaction of soils to the specifications of structural fill, or overexcavation and replacement with a suitable structural fill material, will be necessary. Provided the foundations will be supported as prescribed, the following parameters may be used for design:

- Allowable soil bearing capacity — 2,500 psf
- Passive earth pressure — 300 pcf (equivalent fluid)
- Coefficient of friction — 0.40

A one-third increase in the allowable soil bearing capacity may be assumed for short-term wind and seismic loading conditions. The above passive earth pressure and friction values include a factor-of-safety of 1.5. With structural loading as expected, total settlement in the range of one inch and differential settlement of about one-half inch is anticipated. The majority of the settlements should occur during construction, as dead loads are applied.

Seismic Design

The 2015 International Building Code recognizes the American Society of Civil Engineers (ASCE) for seismic site class definitions. Based on the soil conditions encountered at the test pit locations, in accordance with Table 20.3-1 of the ASCE Minimum Design Loads for Buildings and Other Structures manual, Site Class D should be used for design.

The referenced liquefaction susceptibility map indicates the site maintains a "very low to low" liquefaction susceptibility. Liquefaction is a phenomenon where saturated and loose sandy soils suddenly lose internal strength in response to increased pore water pressures resulting from an earthquake or other intense ground shaking. In our opinion, site susceptibility to liquefaction may be considered low. The relative density and gradation of the site soils is the primary basis for this consideration.

Slab-on-Grade Floors

Slab-on-grade floors for the proposed residential structures should be supported on firm and unyielding subgrades comprised of competent native soil, compacted structural fill, or new structural fill. Unstable or yielding areas of the subgrades should be recompacted, or over-excavated and replaced with suitable structural fill, prior to slab construction.

A capillary break, consisting of a minimum of four inches of free-draining crushed rock or gravel, should be placed below the slabs. The free-draining material should have a fines content of 5 percent or less (where the fines content is defined as the percent passing the Number 200 sieve, based on the minus three-quarter-inch fraction). In areas where slab moisture is undesirable, installation of vapor barriers below the slabs should be considered. If a vapor barrier is to be utilized, it should be a material specifically designed for use as a vapor barrier and should be installed in accordance with the specifications of the manufacturer.

Retaining Walls

Retaining walls must be designed to resist earth pressures and applicable surcharge loads. The following parameters may be used for design:

- Active earth pressure (yielding condition) — 35 pcf (equivalent fluid)
- At-rest earth pressure (restrained condition) — 55 pcf
- Traffic surcharge (passenger vehicles) — 70 psf (rectangular distribution)*
- Passive earth pressure — 300 pcf (equivalent fluid)
- Coefficient of friction — 0.40
- Seismic surcharge — 6H psf**

* ***Where applicable***
** ***Where H equals the retained height (in feet)***

The above design parameters are based on a level backfill condition and level grade at the wall toe. Revised design values will be necessary if sloping grades are to be used above or below retaining walls. Additional surcharge loading from adjacent foundations, sloped backfill, or other loads should be included in the retaining wall design, where applicable.

Retaining walls should be backfilled with free-draining material or suitable sheet drain that extends along the height of the wall and a distance of at least 18 inches behind the wall. The upper 12 inches of the wall backfill can consist of a less permeable soil, if desired. A perforated drainpipe should be placed along the base of the wall and connected to an approved discharge location. A typical retaining wall drainage detail is provided on Plate 4. If drainage is not provided, hydrostatic pressures should be included in the wall design.

Drainage

Heavy seepage was observed across the site during our fieldwork, in our opinion, zones of perched groundwater seepage should be anticipated in general site excavations; however, installing an interceptor trench, as described in this report, will help manage the effects of shallow interflow groundwater. Measures to control surface water runoff and groundwater during construction would likely involve interceptor trenches and sumps. ESNW should be consulted during preliminary grading to identify areas of seepage and to provide recommendations to reduce the potential for instability related to seepage effects.

Finish grades must be designed to direct surface water away from the new structures and/or slopes. Water must not be allowed to pond adjacent to the new structure and/or slopes. In our opinion, foundation drains should be installed along the building perimeter footings. A typical foundation drain detail is provided on Plate 5.

Interception trenches built on-site should be considered as permanent installations. Civil engineering designs for the site should account for shallow groundwater conditions.

Infiltration Evaluation

As indicated in the *Subsurface* section of this study, native soils encountered during our fieldwork were characterized primarily as medium dense to dense, glacial till deposits. Given the cemented nature to the glacial till and shallow depths to heavy, pervasive seepage across the site, infiltration is not feasible from a geotechnical standpoint.

Preliminary Detention Vault Recommendations

Final storm detention design plans had not been finalized at the time of writing this report; however, we understand a detention vault will be constructed in the eastern area of the property. Vault foundations should be supported on competent native soil or crushed rock placed atop competent native soil. Final stormwater vault designs must incorporate adequate buffer space from property boundaries such that temporary excavations to construct the vault structure can be successfully completed or shoring will be required. The presence of perched groundwater seepage should be anticipated during excavation activities for the vault.

The following parameters can be used for preliminary stormwater vault design:

- Allowable soil bearing capacity (dense native soil) 5,000 psf
- Active earth pressure 35 pcf
- Active earth pressure (hydrostatic) 80 pcf
- At-rest earth pressure (restrained) 55 pcf
- At-rest earth pressure (restrained, hydrostatic) 100 pcf
- Coefficient of friction 0.40
- Passive earth pressure 300 pcf
- Seismic surcharge 6H*

Where H equals the retained height

Retaining walls should be backfilled with at least 18 inches of free-draining material or suitable sheet drainage that extends along the height of the walls. The upper one foot of the wall backfill can consist of a less permeable soil, if desired. A perforated drain pipe should be placed along the base of the vault wall and connected to an approved discharge location. If the elevation of the vault bottom is such that gravity flow to an outlet is not possible, the portion of the vault below the drain must be designed to include hydrostatic pressure. Design values accounting for hydrostatic pressure are included above.

ESNW should observe grading operations for the vault and the subgrade conditions prior to concrete forming and pouring to confirm conditions are as anticipated, and to provide supplemental recommendations as necessary. Additionally, ESNW should be contacted to review final vault designs to confirm that appropriate geotechnical parameters have been incorporated.

Utility Support and Trench Backfill

In our opinion, native soils will generally be suitable for support of utilities. Organic-rich soils are not considered suitable for direct support of utilities and may require removal at utility grades if encountered. Remedial measures, such as overexcavation and replacement with structural fill and/or installation of geotextile fabric, may be necessary in some areas in order to provide support for utilities. Groundwater will likely be encountered within utility excavations, and caving of trench walls may occur where groundwater is encountered. Temporary construction dewatering, as well as temporary trench shoring, may be necessary during utility excavation and installation as conditions warrant.

Native soils will not be suitable for use as structural backfill throughout utility trench excavations, unless the soils are at (or slightly above) the optimum moisture content at the time of placement and compaction. Structural trench backfill should not be placed dry of the optimum moisture content. Each section of the site utility lines must be adequately supported in appropriate bedding material. Utility trench backfill should be placed and compacted to the specifications of structural fill as previously detailed in this report, or to the applicable specifications of the City of Monroe or other responsible jurisdiction or agency.

Preliminary Pavement Sections

The performance of site pavements is largely related to the condition of the underlying subgrade. To ensure adequate pavement performance, the subgrade should be in a firm and unyielding condition when subjected to proof rolling with a loaded dump truck. Structural fill in pavement areas should be compacted to the specifications previously detailed in this report. Soft, wet, or otherwise unsuitable subgrade areas may still exist after base grading activities. Areas containing unsuitable or yielding subgrade conditions will require remedial measures, such as over-excavation and/or placement of thicker crushed rock or structural fill sections, prior to pavement. Cement treatment of the subgrade soil can also be considered for stabilizing pavement subgrade areas if allowed by local jurisdictions.

For lightly loaded pavement areas subjected primarily to passenger vehicles, the following preliminary pavement sections may be considered:

- A minimum of two inches of hot mix asphalt (HMA) placed over four inches of crushed rock base (CRB), or;
- A minimum of two inches of HMA placed over three inches of asphalt treated base (ATB).

Heavier traffic areas generally require thicker pavement sections depending on site usage, pavement life expectancy, and site traffic. For preliminary design purposes, the following pavement sections for occasional truck traffic areas may be considered:

- Three inches of HMA placed over six inches of crushed rock base (CRB), or;
- Three inches of HMA placed over four-and-one-half inches of ATB.

The HMA, ATB and CRB materials should conform to WSDOT specifications. All soil base material should be compacted to a relative compaction of 95 percent, based on the laboratory maximum dry density as determined by ASTM D1557. Final pavement design recommendations, including recommendations for heavy traffic areas, access roads, and frontage improvement areas, can be provided once final traffic loading has been determined. Road standards utilized by the City of Monroe may supersede the recommendations provided in this report.

Given the groundwater conditions at site, it may be warranted to install a subgrade drainage system beneath roadways. The need for such a system should be evaluated at the time of construction.

LIMITATIONS

The recommendations and conclusions provided in this study are professional opinions consistent with the level of care and skill that is typical of other members in the profession currently practicing under similar conditions in this area. A warranty is neither expressed nor implied. Variations in the soil and groundwater conditions observed at the test pit locations may exist and may not become evident until construction. ESNW should reevaluate the conclusions provided in this study if variations are encountered.

Additional Services

ESNW should have an opportunity to review final project plans with respect to the geotechnical recommendations provided in this study. ESNW should also be retained to provide testing and consultation services during construction.

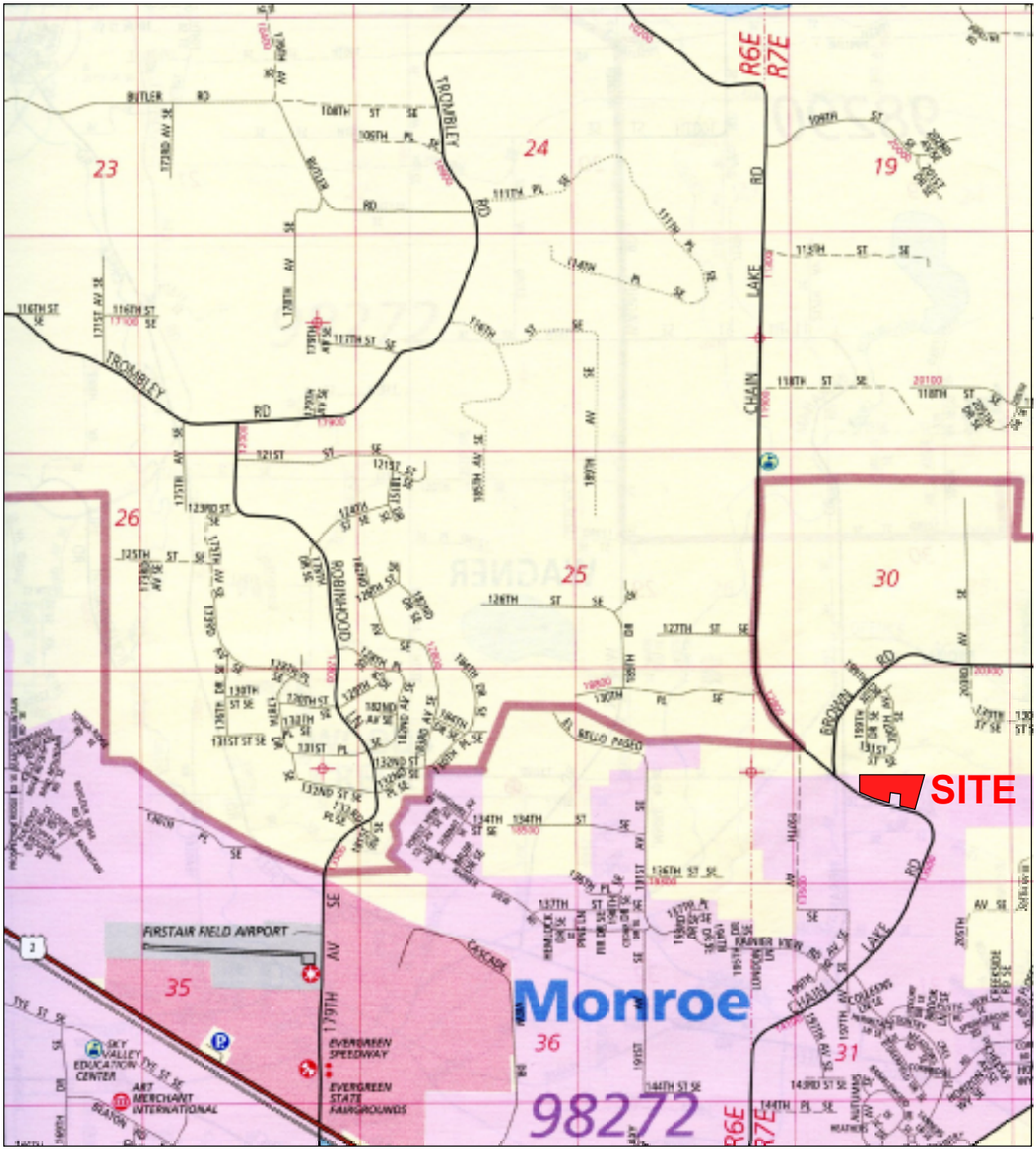

Reference:
Snohomish County, Washington
Map 438
By The Thomas Guide
Rand McNally
32nd Edition

NORTH

NOTE: This plate may contain areas of color. ESNW cannot be responsible for any subsequent misinterpretation of the information resulting from black & white reproductions of this plate.

Earth Solutions NW LLC

Geotechnical Engineering, Construction Monitoring and Environmental Sciences

Vicinity Map
Chain Lake PRD
Monroe, Washington

Drwn. CAM	Date 02/26/2018	Proj. No. 5859
Checked SES	Date Feb. 2018	Plate 1

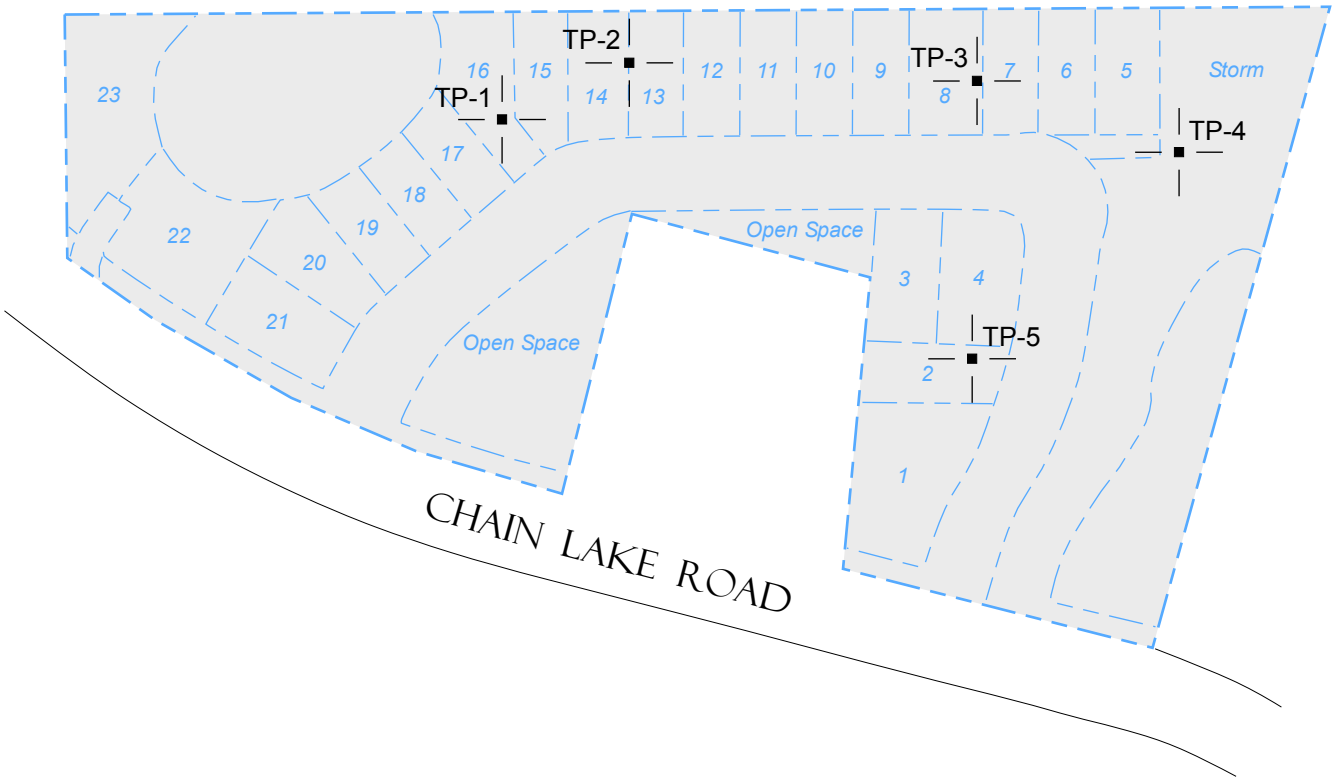

LEGEND

TP-1 — Approximate Location of ESNW Test Pit, Proj. No. ES-5859, Feb. 2018

Subject Site

16 — Proposed Lot Number

NORTH

NOT - TO - SCALE

NOTE: The graphics shown on this plate are not intended for design purposes or precise scale measurements, but only to illustrate the approximate test locations relative to the approximate locations of existing and / or proposed site features. The information illustrated is largely based on data provided by the client at the time of our study. ESNW cannot be responsible for subsequent design changes or interpretation of the data by others.

NOTE: This plate may contain areas of color. ESNW cannot be responsible for any subsequent misinterpretation of the information resulting from black & white reproductions of this plate.

Earth Solutions NW LLC

Geotechnical Engineering, Construction Monitoring and Environmental Sciences

Test Pit Location Plan
Chain Lake PRD
Monroe, Washington

Drwn. CAM	Date 02/26/2018	Proj. No. 5859
Checked SES	Date Feb. 2018	Plate 2

MATERIALS:

Drainage Sand and Gravel should meet the following gradation (Modified City of Seattle Mineral Aggregate Type 26):

Sieve Size	% Passing by Weight
1 - inch	100
3/4 - inch	85 to 95
1/4 - inch	30 to 60
No. 8	20 to 50
No. 50	3 to 12
No. 200 (by wet sieving)	0 to 1 (non-plastic fines)

An alternative to drainage sand and gravel is a 50-50 mixture of washed pea gravel (Mineral Aggregate Type 9) and washed sand (Mineral Aggregate Type 6).

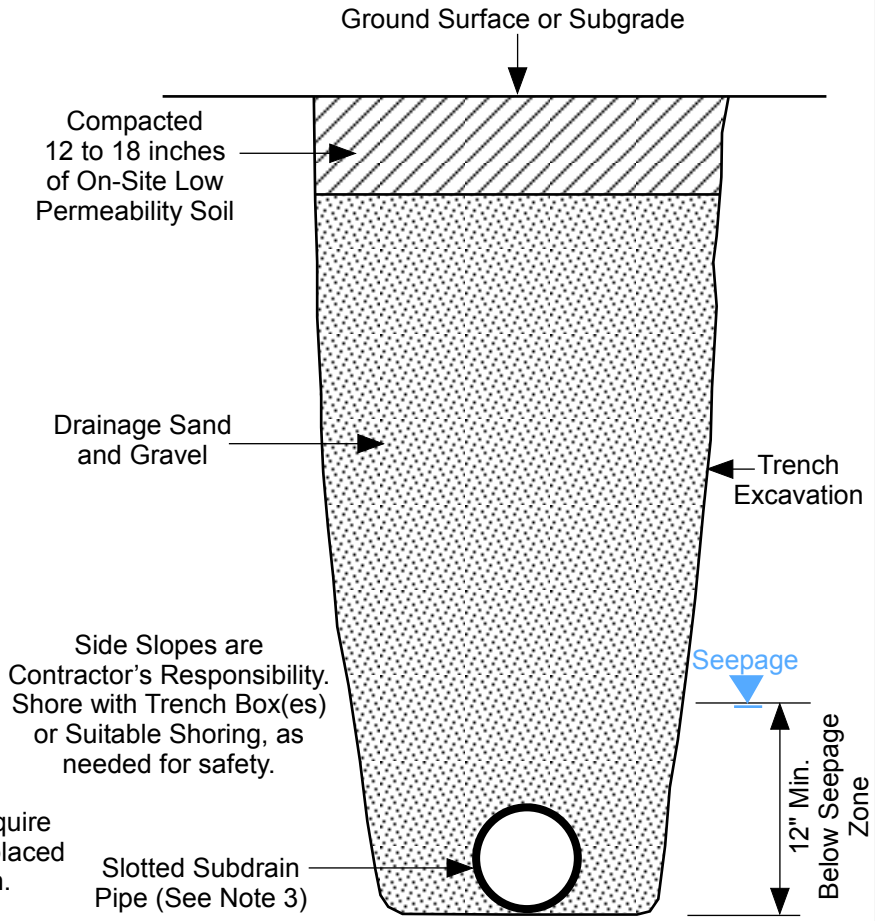

NOTES:

1. Possible caving soil conditions may require that the subdrain pipe and backfill be placed concurrently with the trench excavation.
2. Extend pipe by means of a tightline to a suitable discharge point. Where subdrain pipe changes to a tightline, provide impervious dam (concrete or clay) so as to force all water into the tightline.
3. Slotted subdrain pipe; tight joints; sloped to drain (6"/100' min. slope); provide clean-outs; min. diameter: 6".
4. Slotted pipe to have 1/8" maximum slot width.

TYPICAL CROSS SECTION

NOT - TO - SCALE

Reference: Seattle Landslide Study

Earth Solutions NW LLC

Geotechnical Engineering, Construction Monitoring and Environmental Sciences

TYPICAL FINGER DRAIN DETAIL
Chain Lake PRD
Monroe, Washington

Drwn. CAM	Date 03/05/2018	Proj. No. 5859
Checked SES	Date Mar. 2018	Plate 3

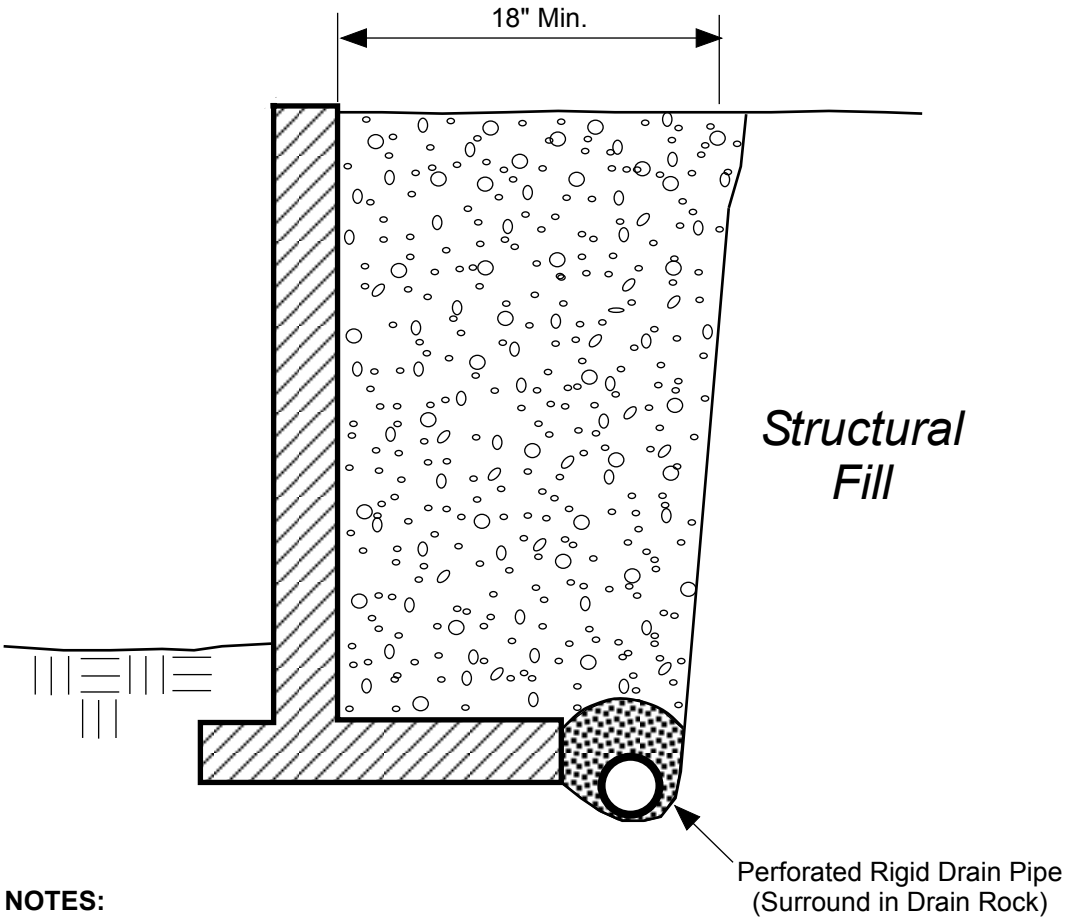

NOTES:

- Free-draining Backfill should consist of soil having less than 5 percent fines. Percent passing No. 4 sieve should be 25 to 75 percent.
- Sheet Drain may be feasible in lieu of Free-draining Backfill, per ESNW recommendations.
- Drain Pipe should consist of perforated, rigid PVC Pipe surrounded with 1-inch Drain Rock.

SCHEMATIC ONLY - NOT TO SCALE
NOT A CONSTRUCTION DRAWING

LEGEND:

Free-draining Structural Backfill

1-inch Drain Rock

Earth Solutions NW LLC
Geotechnical Engineering, Construction Monitoring and Environmental Sciences

RETAINING WALL DRAINAGE DETAIL
Chain Lake PRD
Monroe, Washington

Drwn. CAM	Date 03/05/2018	Proj. No. 5859
Checked SES	Date Mar. 2018	Plate 4

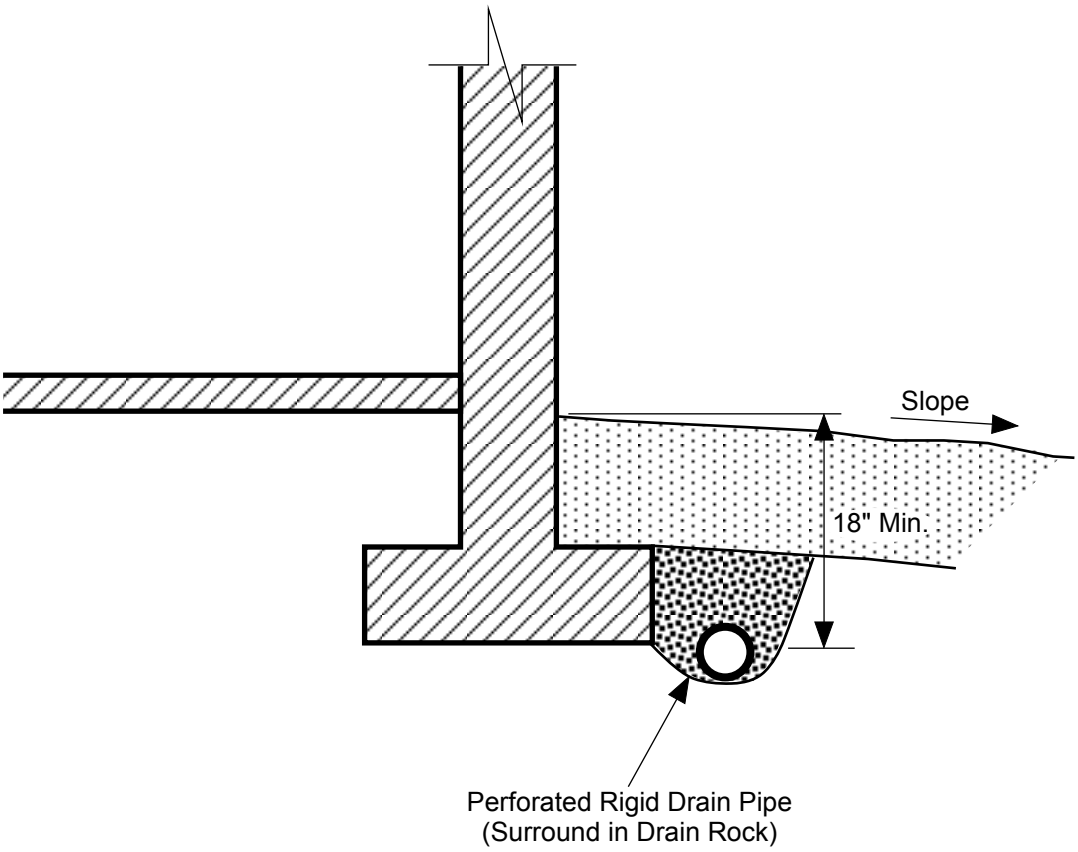

NOTES:

- Do NOT tie roof downspouts to Footing Drain.
- Surface Seal to consist of 12" of less permeable, suitable soil. Slope away from building.

LEGEND:

Surface Seal: native soil or other low-permeability material.

1-inch Drain Rock

SCHEMATIC ONLY - NOT TO SCALE
NOT A CONSTRUCTION DRAWING

Earth Solutions NW LLC
Geotechnical Engineering, Construction Monitoring and Environmental Sciences

FOOTING DRAIN DETAIL
Chain Lake PRD
Monroe, Washington

Drwn. CAM	Date 03/05/2018	Proj. No. 5859
Checked SES	Date Mar. 2018	Plate 5

Appendix A

Subsurface Exploration
Test Pit Logs

ES-5859

Subsurface conditions at the subject site were explored on February 2, 2018 by excavating five test pits using a trackhoe and operator retained by the client. The approximate locations of the test pits are illustrated on Plate 2 of this study. The test pit logs are provided in this Appendix. The maximum exploration depth was approximately seven feet bgs.

The final logs represent the interpretations of the field logs and the results of laboratory analyses. The stratification lines on the logs represent the approximate boundaries between soil types. In actuality, the transitions may be more gradual.

Earth Solutions NW LLC

SOIL CLASSIFICATION CHART

MAJOR DIVISIONS			SYMBOLS GRAPH	SYMBOLS LETTER	TYPICAL DESCRIPTIONS
COARSE GRAINED SOILS MORE THAN 50% OF MATERIAL IS LARGER THAN NO. 200 SIEVE SIZE	GRAVEL AND GRAVELLY SOILS MORE THAN 50% OF COARSE FRACTION RETAINED ON NO. 4 SIEVE	CLEAN GRAVELS (LITTLE OR NO FINES)		GW	WELL-GRADED GRAVELS, GRAVEL - SAND MIXTURES, LITTLE OR NO FINES
				GP	POORLY-GRADED GRAVELS, GRAVEL - SAND MIXTURES, LITTLE OR NO FINES
		GRAVELS WITH FINES (APPRECIABLE AMOUNT OF FINES)		GM	SILTY GRAVELS, GRAVEL - SAND - SILT MIXTURES
				GC	CLAYEY GRAVELS, GRAVEL - SAND - CLAY MIXTURES
	SAND AND SANDY SOILS MORE THAN 50% OF COARSE FRACTION PASSING ON NO. 4 SIEVE	CLEAN SANDS (LITTLE OR NO FINES)		SW	WELL-GRADED SANDS, GRAVELLY SANDS, LITTLE OR NO FINES
				SP	POORLY-GRADED SANDS, GRAVELLY SAND, LITTLE OR NO FINES
		SANDS WITH FINES (APPRECIABLE AMOUNT OF FINES)		SM	SILTY SANDS, SAND - SILT MIXTURES
				SC	CLAYEY SANDS, SAND - CLAY MIXTURES
FINE GRAINED SOILS MORE THAN 50% OF MATERIAL IS SMALLER THAN NO. 200 SIEVE SIZE	SILTS AND CLAYS	LIQUID LIMIT LESS THAN 50		ML	INORGANIC SILTS AND VERY FINE SANDS, ROCK FLOUR, SILTY OR CLAYEY FINE SANDS OR CLAYEY SILTS WITH SLIGHT PLASTICITY
				CL	INORGANIC CLAYS OF LOW TO MEDIUM PLASTICITY, GRAVELLY CLAYS, SANDY CLAYS, SILTY CLAYS, LEAN CLAYS
				OL	ORGANIC SILTS AND ORGANIC SILTY CLAYS OF LOW PLASTICITY
	SILTS AND CLAYS	LIQUID LIMIT GREATER THAN 50		MH	INORGANIC SILTS, MICACEOUS OR DIATOMACEOUS FINE SAND OR SILTY SOILS
				CH	INORGANIC CLAYS OF HIGH PLASTICITY
				OH	ORGANIC CLAYS OF MEDIUM TO HIGH PLASTICITY, ORGANIC SILTS
HIGHLY ORGANIC SOILS				PT	PEAT, HUMUS, SWAMP SOILS WITH HIGH ORGANIC CONTENTS

DUAL SYMBOLS are used to indicate borderline soil classifications.

The discussion in the text of this report is necessary for a proper understanding of the nature of the material presented in the attached logs.

Earth Solutions NW
1805 - 136th Place N.E., Suite 201
Bellevue, Washington 98005
Telephone: 425-449-4704
Fax: 425-449-4711

TEST PIT NUMBER TP-1

PROJECT NUMBER ES-5859 **PROJECT NAME** Chain Lake PRD

DATE STARTED 2/2/18 **COMPLETED** 2/2/18 **GROUND ELEVATION** 390 ft **TEST PIT SIZE**

EXCAVATION CONTRACTOR Client Provided **GROUND WATER LEVELS:**

EXCAVATION METHOD **AT TIME OF EXCAVATION** ---

LOGGED BY SES **CHECKED BY** SSR **AT END OF EXCAVATION** ---

NOTES Depth of Topsoil & Sod 12": grass, duff **AFTER EXCAVATION** ---

DEPTH (ft)	SAMPLE TYPE NUMBER	TESTS	U.S.C.S.	GRAPHIC LOG	MATERIAL DESCRIPTION	
0						
		MC = 71.50%	TPSL		Dark brown saturated TOPSOIL	
				1.0		389.0
			SM		Brown silty SAND with gravel, medium dense, wet -heavy groundwater seepage at 1'	
				2.0		388.0
		MC = 37.00% Fines = 72.70%	ML		Brown sandy SILT with gravel, medium dense, wet [USDA Classification: slightly gravelly LOAM]	
5		MC = 29.70%		5.0		385.0
					Test pit terminated at 5.0 feet below existing grade due to heavy seepage. Groundwater seepage encountered at 1.0 foot during excavation. No caving observed. Bottom of test pit at 5.0 feet.	

Earth Solutions NW
1805 - 136th Place N.E., Suite 201
Bellevue, Washington 98005
Telephone: 425-449-4704
Fax: 425-449-4711

TEST PIT NUMBER TP-2

PROJECT NUMBER ES-5859 **PROJECT NAME** Chain Lake PRD

DATE STARTED 2/2/18 **COMPLETED** 2/2/18 **GROUND ELEVATION** 385 ft **TEST PIT SIZE**

EXCAVATION CONTRACTOR Client Provided **GROUND WATER LEVELS:**

EXCAVATION METHOD **AT TIME OF EXCAVATION** ---

LOGGED BY SES **CHECKED BY** SSR **AT END OF EXCAVATION** ---

NOTES Depth of Topsoil & Sod 6": grass **AFTER EXCAVATION** —

DEPTH (ft)	SAMPLE TYPE NUMBER	TESTS	U.S.C.S.	GRAPHIC LOG	MATERIAL DESCRIPTION	
0			TPSL		0.5 Dark brown highly organic TOPSOIL	384.5
		MC = 53.20%	SM		Brown silty SAND with gravel, medium dense, moist	
		MC = 25.20%			-heavy groundwater seepage from 2' to 2.5' -becomes gray, dense, weakly cemented	
5		MC = 18.40%			6.0	379.0

Test pit terminated at 6.0 feet below existing grade. Groundwater seepage encountered from 2.0 to 2.5 feet during excavation. No caving observed.
Bottom of test pit at 6.0 feet.

Earth Solutions NW
1805 - 136th Place N.E., Suite 201
Bellevue, Washington 98005
Telephone: 425-449-4704
Fax: 425-449-4711

TEST PIT NUMBER TP-3

PROJECT NUMBER ES-5859 **PROJECT NAME** Chain Lake PRD

DATE STARTED 2/2/18 **COMPLETED** 2/2/18 **GROUND ELEVATION** 385 ft **TEST PIT SIZE**

EXCAVATION CONTRACTOR Client Provided **GROUND WATER LEVELS:**

EXCAVATION METHOD **AT TIME OF EXCAVATION** ---

LOGGED BY SES **CHECKED BY** SSR **AT END OF EXCAVATION** ---

NOTES Depth of Topsoil & Sod 6": grass **AFTER EXCAVATION** ---

DEPTH (ft)	SAMPLE TYPE NUMBER	TESTS	U.S.C.S.	GRAPHIC LOG	MATERIAL DESCRIPTION	
0			TPSL	0.5	Dark brown TOPSOIL, root intrusions to 2'	384.5
		MC = 106.10%	SM	3.0	Brown silty SAND, medium dense, wet -heavy groundwater seepage at 2'	382.0
		MC = 23.30%	GM	4.0	Brown silty GRAVEL with sand, dense, wet	381.0

Test pit terminated at 4.0 feet below existing grade due to seepage. Groundwater seepage encountered at 2.0 feet during excavation. No caving observed.
Bottom of test pit at 4.0 feet.

Earth Solutions NW
1805 - 136th Place N.E., Suite 201
Bellevue, Washington 98005
Telephone: 425-449-4704
Fax: 425-449-4711

TEST PIT NUMBER TP-4

PROJECT NUMBER ES-5859 **PROJECT NAME** Chain Lake PRD

DATE STARTED 2/2/18 **COMPLETED** 2/2/18 **GROUND ELEVATION** 380 ft **TEST PIT SIZE**

EXCAVATION CONTRACTOR Client Provided **GROUND WATER LEVELS:**

EXCAVATION METHOD **AT TIME OF EXCAVATION** ---

LOGGED BY SES **CHECKED BY** SSR **AT END OF EXCAVATION** ---

NOTES Surface Conditions: grass **AFTER EXCAVATION** ---

DEPTH (ft)	SAMPLE TYPE NUMBER	TESTS	U.S.C.S.	GRAPHIC LOG	MATERIAL DESCRIPTION	
0			TPSL		0.5 Dark brown highly organic TOPSOIL	379.5
					Brown silty SAND, medium dense, damp	
		MC = 32.90%				
					-light groundwater seepage at 3'	
					-becomes gray, dense to very dense, weakly cemented	
		MC = 15.90%	SM			
5						
		MC = 12.60% Fines = 24.00%			7.0 [USDA Classification: very gravelly sandy LOAM]	373.0
					Test pit terminated at 7.0 feet below existing grade. Groundwater seepage encountered at 3.0 feet during excavation. No caving observed. Bottom of test pit at 7.0 feet.	

Earth Solutions NW
1805 - 136th Place N.E., Suite 201
Bellevue, Washington 98005
Telephone: 425-449-4704
Fax: 425-449-4711

TEST PIT NUMBER TP-5

PROJECT NUMBER ES-5859 **PROJECT NAME** Chain Lake PRD

DATE STARTED 2/2/18 **COMPLETED** 2/2/18 **GROUND ELEVATION** 385 ft **TEST PIT SIZE**

EXCAVATION CONTRACTOR Client Provided **GROUND WATER LEVELS:**

EXCAVATION METHOD **AT TIME OF EXCAVATION** ---

LOGGED BY SES **CHECKED BY** SSR **AT END OF EXCAVATION** ---

NOTES Depth of Topsoil & Sod 3": grass **AFTER EXCAVATION** ---

DEPTH (ft)	SAMPLE TYPE NUMBER	TESTS	U.S.C.S.	GRAPHIC LOG	MATERIAL DESCRIPTION	
0			TPSL		0.3 Dark brown highly organic TOPSOIL	384.7
					Brown silty SAND, medium dense, wet	
		MC = 36.90%	SM		-heavy groundwater seepage at 2'	
					-becomes gray, dense, unweathered	
		MC = 15.20% Fines = 33.70%			4.0 [USDA Classification: gravelly fine sandy LOAM]	381.0

Test pit terminated at 4.0 feet below existing grade. Groundwater seepage encountered at 2.0 feet during excavation. No caving observed.

Bottom of test pit at 4.0 feet.

Appendix B

Laboratory Test Results

ES-5859

Earth Solutions NW, LLC
1805 - 136th PL N.E., Suite 201
Bellevue, WA 98005
Telephone: 425-449-4704
Fax: 425-449-4711

GRAIN SIZE DISTRIBUTION

PROJECT NUMBER ES-5859 **PROJECT NAME** Chain Lake PRD

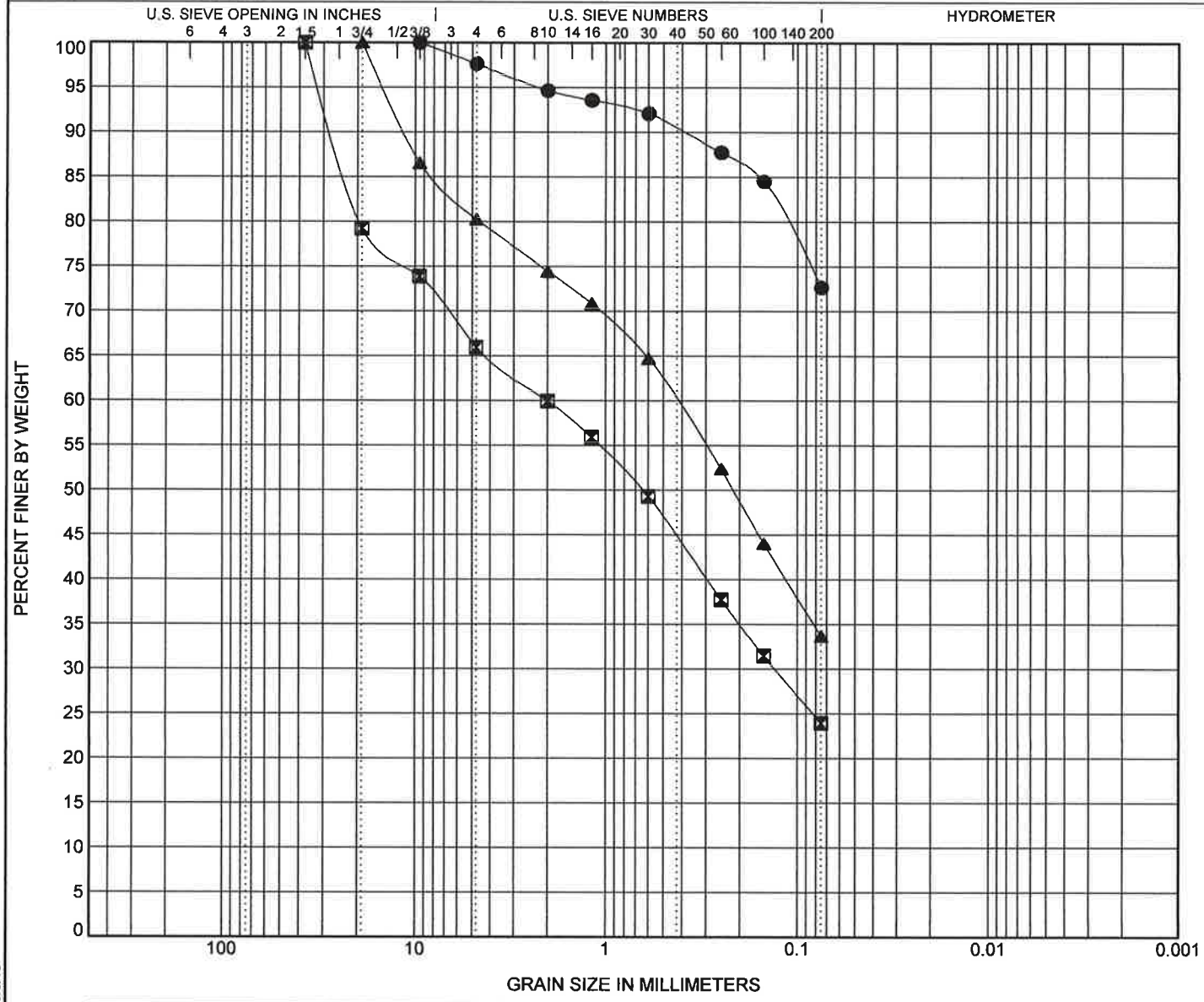

COBBLES	GRAVEL		SAND			SILT OR CLAY
	coarse	fine	coarse	medium	fine	

	Specimen Identification		Classification	Cc	Cu
●	TP-1	3.00ft.	USDA: Brown Slightly Gravelly Loam. USCS: ML with Sand.		
⊠	TP-4	7.00ft.	USDA: Gray Very Gravelly Sandy Loam. USCS: SM with Gravel.		
▲	TP-5	4.00ft.	USDA: Gray Gravelly Fine Sandy Loam. USCS: SM with Gravel.		

	Specimen Identification		D100	D60	D30	D10	LL	PL	PI	%Silt	%Clay
●	TP-1	3.0ft.	9.5							72.7	
⊠	TP-4	7.0ft.	37.5	2.018	0.131					24.0	
▲	TP-5	4.0ft.	19	0.429						33.7	

Report Distribution

ES-5859

EMAIL ONLY

Prospect Development, LLC
2913 – 5th Avenue Northeast, Suite 201
Puyallup, Washington 98372

Attention: Mr. Mark Holland